Intellian

OW70L-Dac

OneWeb LEO User

Installation & Operation User Guide

Serial number of the product

This serial number will be required for all troubleshooting or service inquiries.

© 2021 Intellian Technologies, Inc. All rights reserved. Intellian and the Intellian logo are trademarks of Intellian Technologies, Inc., registered in the U.S. and other countries. The OW70L-Dac is a trademark of Intellian Technologies, Inc. Intellian may have patents, patent applications, trademarks, copyrights, or other intellectual property rights covering subject matter in this document. Except as expressly provided in any written license agreement from Intellian, the furnishing of this document does not give you any license to these patents, trademarks, copyrights, or other intellectual property. All other logos, trademarks, and registered trademarks are the property of their respective owners. Information in this document is subject to change without notice. Every effort has been made to ensure that the information in this manual is accurate. Intellian is not responsible for printing or clerical errors.

Disclaimer

The information in this user guide is subject to change without prior notice through a product life cycle. A printed version of the guide is periodically updated and may contain inaccuracies or omissions compared to the recent product information. The most up-to-date information can be readily accessible on our website at intelliantech.com.

Doc. No. UG-KL1002-V1.0

Table of Contents

Chapter 1. Precautions 6
- **1.1 Warnings, Cautions, and Notes** 6
- **1.2 General Precautions** 7

Chapter 2. Introduction 8
- **2.1 Introduction to OW70L-Dac** 8
- **2.2 OW70L-Dac Features** 8

Chapter 3. Planning Installation 9
- **3.1 Installation Precautions** 9
- **3.2 Selecting Installation Site** 9
  - 3.2.1 Installation Location for Antenna 9
  - 3.2.2 Installation Location for CNX 9
  - 3.2.3 Minimizing Satellite Blockage 10
  - 3.2.4 RF Hazard Precautions 11
- **3.3 System Package** 12
  - 3.3.1 Above Deck Unit (ADU) 12
  - 3.3.2 Customer Network Exchange (CNX) 12
  - 3.3.3 Packing List 13
- **3.4 Installer/Customer Furnished Equipment** 13
- **3.5 Unpacking System Package** 14

Chapter 4. Installing Above Deck Unit (ADU) 15
- **4.1 General Requirements** 15
  - 4.1.1 Tower Construction Requirements 15
  - 4.1.2 Antenna Mounting Requirements 15
- **4.2 Antenna Dimensions** 16
- **4.3 Placing Antenna on Tower** 17
  - 4.3.1 Leveling Mounting Plate 17
  - 4.3.2 Marking True North Point on Mounting Plate 17
  - 4.3.3 Placing Antenna on Mounting Plate 18
- **4.4 Placing Antenna on NPM (Optional)** 19
  - 4.4.1 Assembling Antenna on Fine Tune 19
  - 4.4.2 Assembling Fine Tune on Base Panel 20
  - 4.4.3 Placing Antenna on Fine Tune 22
  - 4.4.4 Placing Concrete Blocks on Base Panels 23
- **4.5 Placing Antenna on Mast (Optional)** 24
- **4.6 Mounting Antenna on Surface** 25
- **4.7 Connecting Cable to Antenna** 26
  - 4.7.1 Connecting Cable to Primary Antenna 26
  - 4.7.2 Connecting Primary Antenna to Secondary Antenna 27
- **4.8 Grounding Antenna** 28

Chapter 5. Installing Below Deck Unit (BDU) 29

5.1 CNX Dimensions 29
5.2 Antenna System Configuration 30
5.3 CNX Cable Connection 31
5.3.1 CNX Back Panel Connectors 31
5.3.2 CNX Connector Pinout Guide 31

Chapter 6. Operating CNX 33
6.1 CNX Front Panel View 33

Chapter 7. Using Local User Interface (LUI) 34
7.1 Introduction 34
7.2 Requirements to Access OneWeb Web Interface 34
7.3 Turning On System 35
7.4 Accessing Webpage 35
7.4.1 TCP/IP Connection through LAN Port 35
7.5 Webpage Layout 36
7.5.1 Navigation bar 36
7.5.2 Home Page 37
7.5.3 Footer 37
7.6 Starting Install Menu (Install Wizard) 38
7.6.1 Installation Navigation 38
7.6.2 Initial Install Page 38
7.6.3 Upload Software Bundle 39
7.6.4 New Software Listing 39
7.6.5 Upload Ephemeris Data 39
7.6.6 RF Cable Setup 40
7.6.7 TILT Calibration 40
7.6.8 GNSS Configuration 40
7.6.9 Configure Blockage Zones 41
7.6.10 Antenna Leveling 41
7.6.11 Autonomous States 42

Chapter 8. Specification 43
8.1 Technical Specification 43
8.1.1 RF Specification 43
8.1.2 Mechanical & Power Specification 43
8.1.3 Environmental Specification 44

Chapter 9. Warranty 45

Chapter 10. Appendix 46
10.1 Appendix A. Pre-Installation Checklist 46
10.2 Appendix B. Tightening Torque Specification 47
10.3 Appendix C. Installing Heating Device 48
10.4 Appendix D. Certifications 50

List of Figures

Chapter 3. Planning Installation 9

Figure 1: Minimizing Satellite Blockage (example) 10
Figure 2: RF Radiation Hazard Area 11
Figure 3: Radomes and Pedestal 12
Figure 4: Customer Network Exchange (CNX) 12

Chapter 4. Installing Above Deck Unit (ADU) 15

Figure 5: Antenna Dimensions 16
Figure 6: Placing Antenna on Mounting Plate 18
Figure 7: Placing Antenna on Fine Tune of NPM 22
Figure 8: Placing Concrete Blocks on Base Panel of NPM 23
Figure 9: Placing Antenna on Mast 24
Figure 10: Installing Sequence of Bolts 25
Figure 11: Installing Bolts for Mounting Antenna 25
Figure 12: Cable Connection of CNX to Antenna 26
Figure 13: Cable Connection Between Two Antennas 27
Figure 14: Grounding Antenna 28

Chapter 5. Installing Below Deck Unit (BDU) 29

Figure 15: CNX Dimensions 29
Figure 16: Dual Antenna System Configuration 30
Figure 17: Back Panel Connectors 31

Chapter 6. Operating CNX 33

Figure 18: Front Panel View of CNX 33

Chapter 7. Using Local User Interface (LUI) 34

Figure 19: Back Panel LAN Port Connection 35

Chapter 1. Precautions

Prior to installation, read this Installation Guide carefully including the safety warnings and information. Failure to do so could result in serious injury or inoperability of the terminal.

Antenna installation must be provided by a suitably trained professional installation technician or bya qualified antenna installation service. Installation is not to be attempted by someone not trained or experienced in this type of work.

1.1 Warnings, Cautions, and Notes

WARNING, CAUTION, and NOTE statements are used throughout this manual to emphasize important and critical information. You must read these statements to help ensure safety and to prevent product damage. The statements are defined below.

	WARNING WARNING indicates a potentially hazardous situation which, if not avoided, could resultin death or serious injury.
	CAUTION CAUTION indicates a potentially hazardous situation which, if not avoided, could result in minor or moderate injury or damage to equipment. It may also be used to alert against unsafe practices.
	NOTE A NOTE statement is used to notify people of installation, operation, programming, or maintenance information that is important, but not hazard-related.

1.2 General Precautions

Before you use the antenna, make sure that you have read and understood all safety requirements.

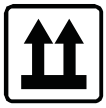	**THIS WAY UP** • Place the boxes/crates on the floor with the arrow pointing up.
	FRAGILE • Since the Radome is fragile, handle it with care. Do not apply excessive pressure or shock. These may cause surface cracking or other damage.
	DO NOT STACK • Do not stack boxes/crates as there is a risk boxes/crates may fall and be damaged.
	KEEP DRY • Always make sure the antenna is stored on a dried floor. • The antenna can withstand ordinary rain. However it water resistance cannot be guaranteed if submerged. • Keep the antenna in dried place for sufficient ventilation. Do not store the antenna wrapped in a tarp, tent, vinyl, and others.

*** DO NOT SHIP VIA RAIL**: Ensure not to ship any system via Rail**.**

- Before you begin a site installation, check the appropriate electrical code requirements and with other regulations governing this kind of installation within the country of use.
- When installing, replacing, or disconnecting any cable components, make sure that each exposed metal connector of the antenna is grounded firmly before the work.
- The outdoor antenna and antenna cables are electrical conductors so transients or electrostatic discharges may occur at the antenna during thunderstorms. If the antenna is not installed properly, the electronic equipment may be damage and/or cause personal injury or death to persons touching the exposed metal connectors of the electronic equipment.
- Avoid installing the antenna at high-voltage arc-over place where there is any possibility of service drops to buildings.
- Do not climb the tower during a thunderstorm or in windy, wet, icy, or snowy conditions.
- Do not touch antennas, surge arrestors, or antenna cables during a thunderstorm.
- ODE (Outdoor Equipment) must be properly mounted and secured to the tower. Failure to do so could result in detachment of the unit, causing disruption in the unit's operation or could result in the unit falling, which could cause serious injury or death.
- When installing the antenna, remember;
  - DO NOT use a metal ladder.
  - DO dress properly: wear rubber gloves, shoes with rubber soles and heels, and a long sleeve shirt or jacket.

Chapter 2. Introduction

2.1 Introduction to OW70L-Dac

The OW70L-Dac is a dual parabolic terminal with a 73 cm reflector size based on a 12.3 dB/K G/T which can beoperated in the OneWeb low earth orbit (LEO) satellite constellation. The OneWeb communications networkcomprises terrestrial gateways positioned around the globe communicating with OneWeb user terminals. Aradio link to the satellites is established using the User Terminal (UT) operating in the Ku-band, with uplink frequencies between 14.0 and 14.5 GHz, and downlink between 10.7 and 12.7 GHz. The antenna provides Internet access via the OneWeb satellites and OneWeb gateways.

2.2 OW70L-Dac Features

- LEO satellite scan and tracking algorithm.
- 3-axis stabilization platform with motion drift compensation solutions.
- Fully sealed to protect against outdoor environment.
- Dual-dome operation for blockage mitigation.
- Single IP allocation to common user device behind CNX when UTs are paired for blockage mitigation to enable seamless IP-switching across UTs.
- Simple and suitable industrial design for professional installation.
- Wideband GNSS antenna improves location precision.
- Provides secure connections over GigE between router and BBU or Cell-site router.
- Remote monitoring, diagnostics and trouble-shooting to resolve issues on site, which is made available to the end user via a local management interface.
- Ability to store multiple software versions to fallback to a known good or factory version in case of errorsin the current working version of software.

Chapter 3. Planning Installation

CAUTION

Be sure to complete the pre-installation checklist before you begin installing the antenna. Refer to "10.1 Appendix A. Pre-Installation Checklist" on page 46.

3.1 Installation Precautions

The User terminal installation requires extreme precaution and safety measures given the installation environment. Failure to follow the correct installation process may lead to injury of the installer and/or cause damage to the system. In order to maximize the performance of the system, a thorough review of this installation guide is strongly recommended, as well as executing the installation process as it is noted in this manual.

To ensure your own safety and convenience of installation, note the following precautions.

- Review the general safety precautions in the Safety Precautions chapter.
- Familiarize yourself with the antenna and the mounting instructions prior to climbing any roof or ladder.
- Verify that all safety measures for outdoor or rooftop installation are arranged.
- Test all requirements before beginning the actual installation to determine if the equipment and necessary items are available and functioning properly.
- Install the grounding system for the antenna tower, radio hardware, and surge arrestor before connecting the cable from the equipment to the surge arrestor. This protects the system against lightning strikes during installation.

3.2 Selecting Installation Site

Before installing the antenna system, consider the best place to position the antenna for both performance and safety.

3.2.1 Installation Location for Antenna

The antenna should be placed in an area with little to no RF signal blockage. A safe mounting place and a restricted access location should be selected.

When the antenna is transmitting, obstacles in way of the beam path will decrease the satellite signal strength. The antenna unit should have direct line-of-sight with the desired satellite without any obstacles in the beam path. Certain minimum distances between the antenna and other onboard devices must also be considered during installation.

3.2.2 Installation Location for CNX

An ideal location for the CNX should be:

- Within 100 m (300 ft) of the antennas
- In a dry, cool and ventilated location
- Within close proximity to the digital and analog interface
- Close to a power source

3.2.3 Minimizing Satellite Blockage

The ideal antenna site should have a clear view of the horizon or of the satellite with all-around clearance. Some examples of obstacles you must avoid for the directional antenna to operate effectively are: neighboring buildings, trees, or other obstructions and power lines. To minimize the influence of obstacles, signal interference, or reflections, note the following guidelines:

- Avoid trees in the signal path. Seasonal changes such as leaves or hanging icicles can impact signal absorption. Mount the antenna as high as possible above the ground to free up space. In open areas, the ground is the actual surface of the earth.
- To use the basic antenna system you need to install two antennas. Intellian recommended Installing the antenna at least 1.53 m (60.23") away from the other antenna.
- Make sure there are no obstacles within 53 degrees from Zenith. Obstacles can interrupt the satellite signal transmission and reception of the antenna.

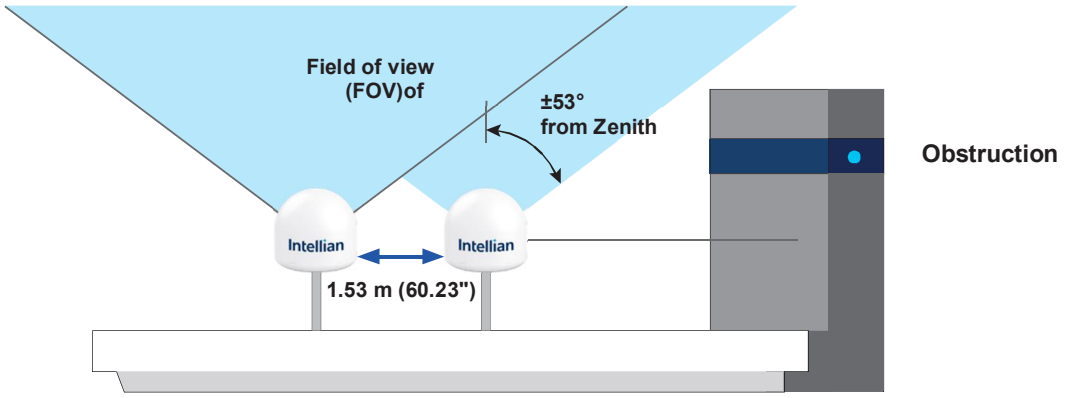

Figure 1: Minimizing Satellite Blockage (example)

3.2.4 RF Hazard Precautions

The Federal Communications Commission has adopted a safety standard for human exposure to RF (Radio Frequency) energy, which is below the OSHA (Occupational Safety and Health Act) limits. To comply with current FCC RF Exposure limits, the antenna must be installed at or exceeding the minimum safe distance as guided by the antenna manufacturer or supplier.

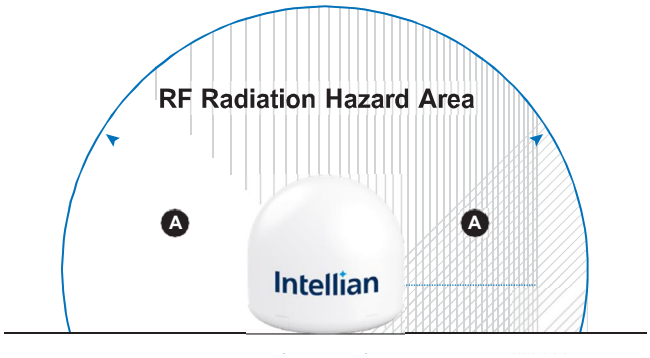

Figure 2: RF Radiation Hazard Area

WARNING

Exposure to radio frequency energy (RF) from the antenna may cause thermal injuries including tissue damage from increased heating and body temperature. Keep everyone at a safe distance from the antenna when the system power is ON. Personnel must maintain a minimum distance of A____(refer to the table below) from the antenna and installers must place the ODE (Outdoor Equipment) transmitter in a manner to maintain minimum spacing requirement. Failure to do so could result in exposure to radio frequency energy (RF) transmitted from the ODE (Outdoor Equipment) that could result in serious injury or death.

The value of the table applies to persons in the general population who are in an uncontrolled environment.

For General population/Uncontrolled exposure 1.0 mW/cm2

Reflector Size (mm)	Antenna Gain	A Minimum Distance (m (ft))
*730 mm	38.5	7.50 (24.60)

*The minimum distance values for radio frequency energy (RF) depend on the reflector size of the antenna. Confirm your reflector size of the antenna.

3.3 System Package

3.3.1 Above Deck Unit (ADU)

The OW70L-Dac operates in a dual parabolic primary and secondary configuration. Each terminal consists of apedestal, a reflector, RF modules and antenna control modules which are enclosed in a radome.

- Pedestal: 3-axial stabilized platform for the position compensation of the antennas
- RF modules: the antenna consists of a reflector, OMT, feeder and RCM which converts the satellite signals into the IF bands and up-converts IF bands to the forward-link satellite signals. The primary antenna includes the modem module, called SSM, which implements necessary functionality to transmit and receive signals as well as communicate and command pointing directions to the antenna.
- Control modules: the antenna interface module, called AIM, controls the antenna motion by interfacing with the modem and RF modules.
- Radome: protects the antenna from outdoor environment.

Figure 3: Radomes and Pedestal

3.3.2 Customer Network Exchange (CNX)

The Customer Network Exchange (CNX) must be installed in a weather-protected area. It interfaces with user equipment and provides power and data interconnection. The CNX connects to primary antenna while providing secure GigE connection to the Baseband Unit. The CNX takes 48 V input but can vary by product variant.

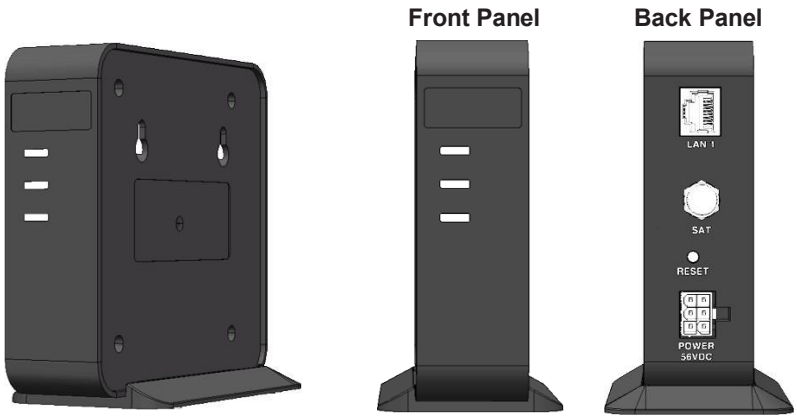

Figure 4: Customer Network Exchange (CNX)

3.3.3 Packing List

The User Terminal (UT) is composed of the following components.

Primary Antenna Package (Box 1)			
Item	Q'ty	Size	Description
Primary Antenna Unit	1		Primary user terminal
Quick Installation Guide (QIG)	1		Installation Manual
Customer Network Exchange (CNX)	1	219 mm x 185 mm x 50 mm	To access to OneWeb services
Power Adapter (AC-DC)	1		To convert 100-240 V AC power to +56 V DC for CNX
MoCA Cable (RG 6)	1	30 m	F-type, For CNX power & data connection
Secondary Antenna Package (Box 2)			
Item	Q'ty	Size	Description
Secondary Antenna Unit	1		Secondary user terminal
RF Cable (LMR400)	2	5 m	For inter-dome RF Rx & Tx connection
Ethernet Cable (CAT 5)	1	5 m	For inter-dome Ethernet connection
Signal Cable (CAT 5)	1	5 m	For inter-dome control signal connection
AC Power Cord (USA)	1	1.5 m	BDU Power Cord (110 V)
AC Power Cord (CEEE7/7)	1	1.5 m	BDU Power Cord (220 V)

3.4 Installer/Customer Furnished Equipment

- Country specific power cable
- Grounding system that meets the local electrical code requirements
- Waterproofing of all connections
- Tape or wraps to attach the antenna cable to the tower
- Fasteners and other installation tools

3.5 Unpacking System Package

Follow the steps for easy and safe unpacking. The system package consists of two packages that a Primary Antenna Package (Box 1) and a Secondary Antenna Package (Box 2).

1. Bring System Packages (Primary Antenna Package(Box 1) and Secondary Antenna Package (Box 2)).

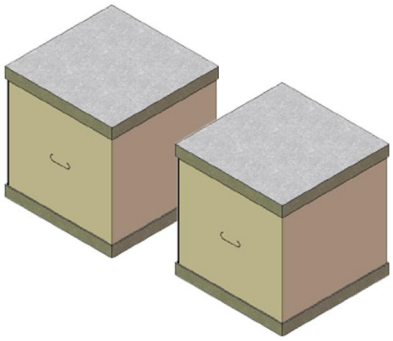

2. Remove the top cover and

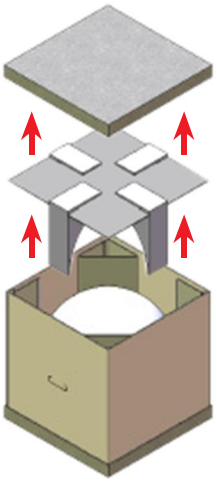

protection forms.

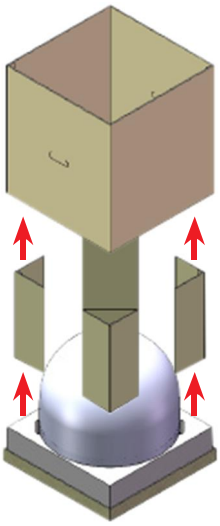

3. Remove the inside paper supports and body of box.

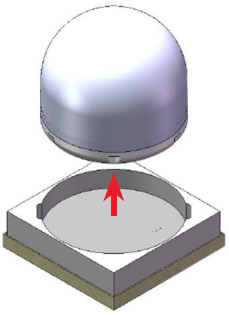

4. Take out the Antenna.

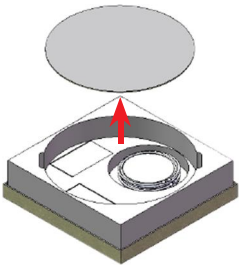

5. Remove the bottom cover and take out the below items.
   - In Primary Antenna Package (Box 1): Quick Installation Guide (QIG), Customer Network Exchange (CNX), MoCA Cable, PowerAdapter
   - In Secondary Antenna Package (Box 2): RF Cable, EthernetCable, Signal Cable, AC Power Cord

Chapter 4. Installing Above Deck Unit (ADU)

4.1 General Requirements

4.1.1 Tower Construction Requirements

The antenna is designed to be installed on a cell tower, mostly monopole type but some lattice or guyed towers or buildings are also in consideration. To accommodate the antennas, the antenna tower must satisfy the following requirements:

- Ensure that the construction of the tower consists of sturdy, weatherproof, and non-corrosive material (e.g. stainless or galvanized steel construction pipe).
- The recommended mounting height of the antennas is about 6m above the ground level and each antenna will, desirably, be mounted approximately 1 m out from the pole.
- Make sure that the tower is free from any substance which may prevent a good electrical connection with the antenna.

4.1.2 Antenna Mounting Requirements

You need to procure or fabricate a suitable mounting plate and tower to support the ODE (Outdoor Equipment).

Consider the following factors to select the mounting method:

- The physical size of the unit (770 mm (30.31 inch) high by 730 mm (28.74 inch) diameter)
- The weight of the unit (30 kg, 66.13 lbs)
- The mechanical resonance of the system excited by: wind induced vibration (5 Hz)
- The system operates in primary-secondary mode. To mount dual antennas on a single tower, ensure there is <100 ft separation between domes.
- The preferred installation orientation is East to West.
- Ensure the antenna is levelled ±1° in elevation and ±5° from the True North axis.

4.2 Antenna Dimensions

Confirm the height and diameter of the antenna unit shown in the following figure before installing it. The mounting surface and overall space occupied by the radome must be sufficient for the height and diameter of the fully constructed radome on top of its mounting base. The primary and secondary radome dimensions are the same.

Unit: mm (inch)

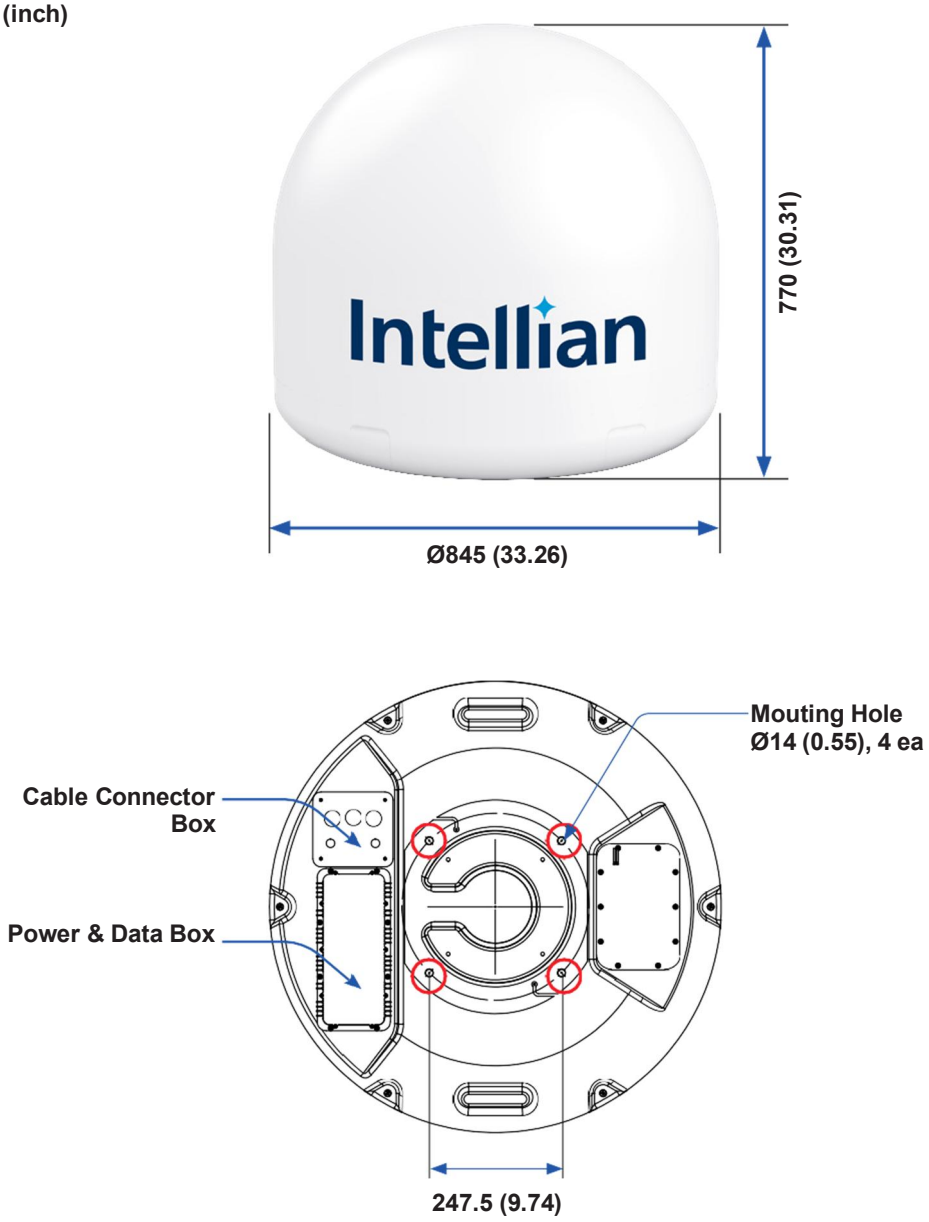

Figure 5: Antenna Dimensions

4.3 Placing Antenna on Tower

4.3.1 Leveling Mounting Plate

Make sure the horizontal pole and mounting plate are almost parallel to the surface (precondition) using leveling tools.

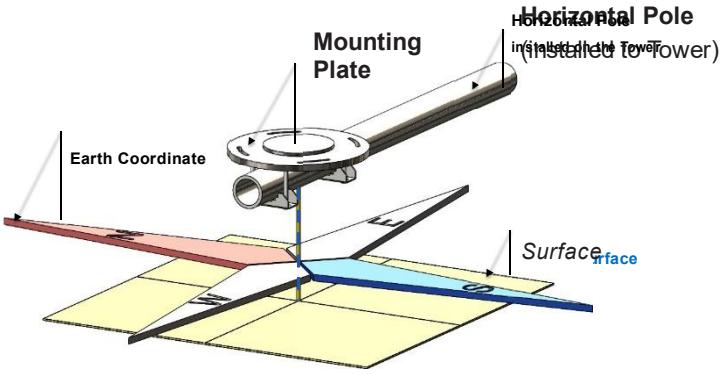

4.3.2 Marking True North Point on Mounting Plate

A. When using a magnetic compass:

1. Measure the orientation of the magnetic north by using a compass.
2. Mark the magnetic north point on the mounting plate.
3. Get the magnetic declination angle at the installation area by the calculator (Refer to the Magnetic Field Calculators on the National Oceanic and Atmospheric Administration (NOAA) website www.ngdc.noaa.gov).
4. Mark the **True North** point on the mounting plate by including the declination angle.

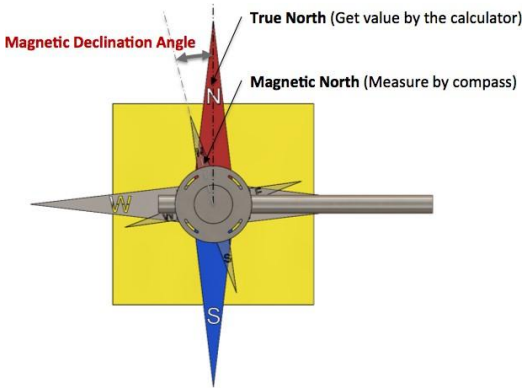

B. When using a true north indicator:

Mark the **True North** point on the mounting plate by using the true north indicator.

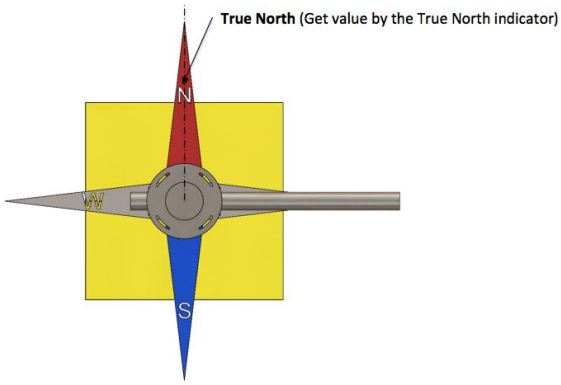

4.3.3 Placing Antenna on Mounting Plate

1. Fasten the lifting straps (separate purchase) to the antenna unit. Check the condition of the lifting strap and ensure the shackle is tightened up. Lift the antenna above the mounting plate using a crane and carefully lower down the antenna toward the mounting plate.
2. Check the **Arrow Mark** on the bottom radome.
3. Place the antenna on the mounting plate. Align the **Arrow Mark** to the **True North** point (marked in the previous step) of the mounting plate. The antenna must be correctly aligned during installation or after major repairs to perform properly.

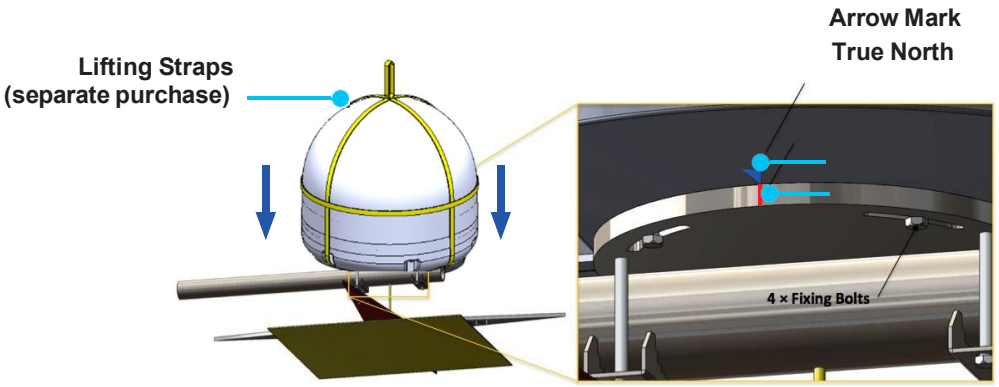

Figure 6: Placing Antenna on Mounting Plate

CAUTION

Ensure the antenna is mounted within ±5° azimuth and ±1° elevation.

WARNING

When moving the antenna, it may sway by windy. Be careful when handling the antenna.

4.4 Placing Antenna on NPM (Optional)

4.4.1 Assembling Antenna on Fine Tune

FAST ENERS			
NO	ITEM	DESCRIPTION	QTY
1			4
2		5/16"-18*1"Round head Square screw	4
3		5/16"-18 Flange nut	4
4		M12*35 hex-head cap screw	4
5		M12 Spring Washer	4
		M12 Washer	

TOOLS
13mm hexa-wrench
19mm hexa-wrench

HARDWARE					
DESCRIPTION	QTY	DESCRIPTION	QTY	DESCRIPTION	QTY
TOP FINE TUNE ASSY. (#A)	1	TOP PLATE CLAMP (#D)	4		
A		D			
DESCRIPTION	QTY	DESCRIPTION	QTY	DESCRIPTION	QTY
CLAMP ASSY.(#B)	1	FIX CLAMP (#E)	4		
B		E			
DESCRIPTION	QTY	DESCRIPTION	QTY	DESCRIPTION	QTY
BOTTOM PLATE CLAMP (#C)	4				
C					

Step 1

Assemble Top fine tune Assy. and clamp Assy. with bottom plate clamp(#C), screw(#1),flange nut(#2)

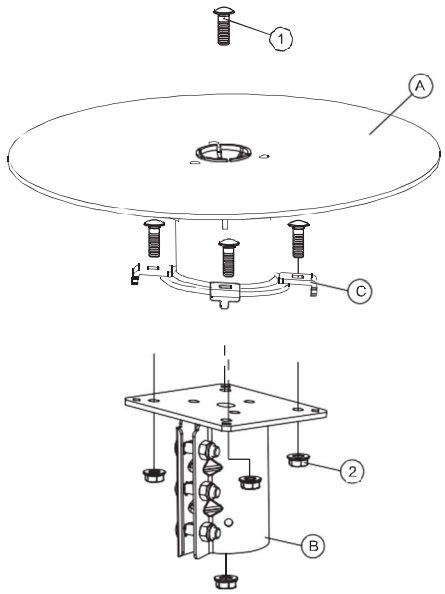

Step 2

Assemble fine tune Assy. and attena with top plate clamp(#D),fix clamp(#E),screw(#3),washer(#4),spring washer(#5)

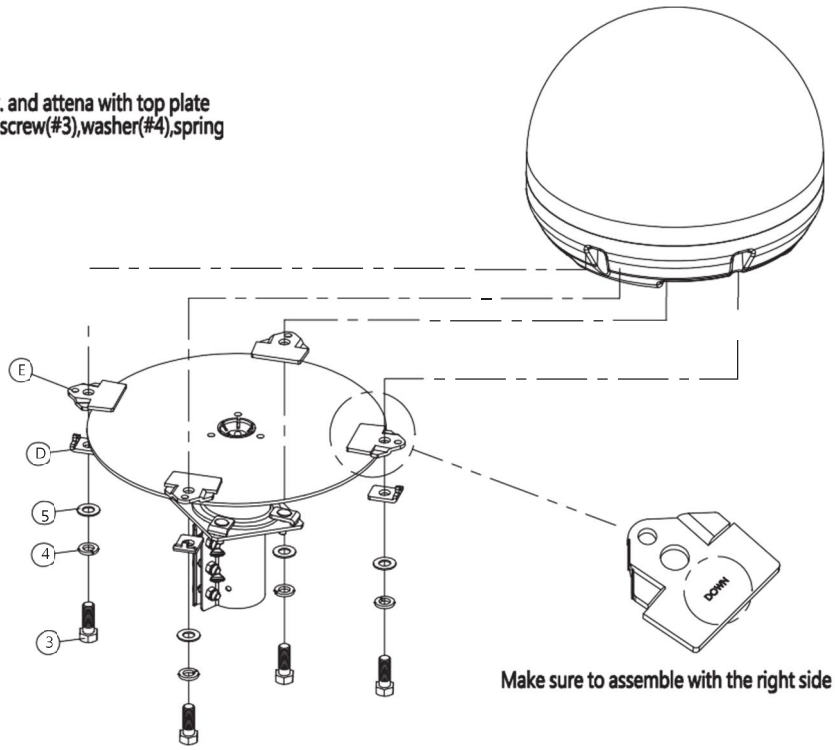

Make sure to assemble with the right side of fix clamp

4.4.2 Assembling Fine Tune on Base Panel

FASTENE RS			
NO	ITEM	DESCRIPTION	QTY
1		5/16"-18*5/8"Round flat head Square screw	6
2		5/16"-18*7/8" Round head Square screw	16
3		5/16"-18*3-1/8" hex-head cap screw	8
4		5/16"-18x3-3/8" hex-head cap screw	2
5		5/16"-18 washer	42
6		5/16"-18 nylon nut	32
7		Ø8.5/Ø12.5*L60 Bush	2
8		5/16"-18x1-1/4" hex flange screw	2
9		5/16"-18 kepts k-lock nut	4
10		#12-3/4" tapping screw	4

TOOLS
13mm wrench

HARDWARE					
DESCRIPTION	QTY	DESCRIPTION	QTY	DESCRIPTION	QTY
Mounting Base(#A)	1	Side Supporting Rods(#C)	8	Ground Mounting Base(#E)	2
A		C		E	
DESCRIPTION	QTY	DESCRIPTION	QTY	DESCRIPTION	QTY
Mast Pole(#B)	2	Support Plate(#D)			
B		D			

Step 1

Assemble 3 mounting bases with screw(#1) ,washer(#5),nylon nut(#6)

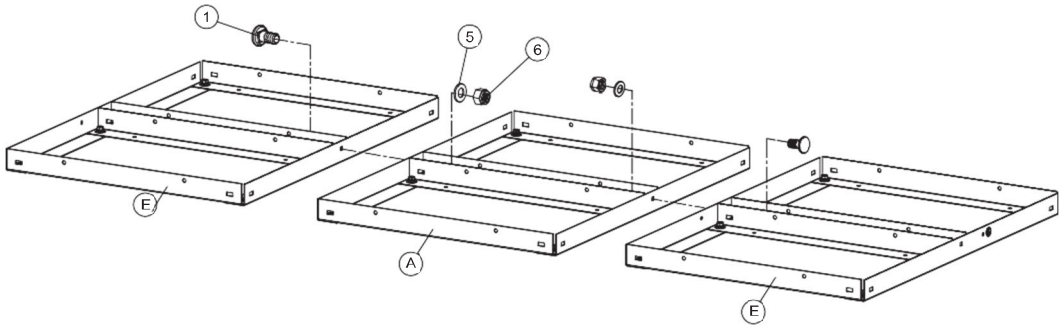

Step 2

Assemble 4 support plates with screw(#2), washer(#5),nylon nut(#6)

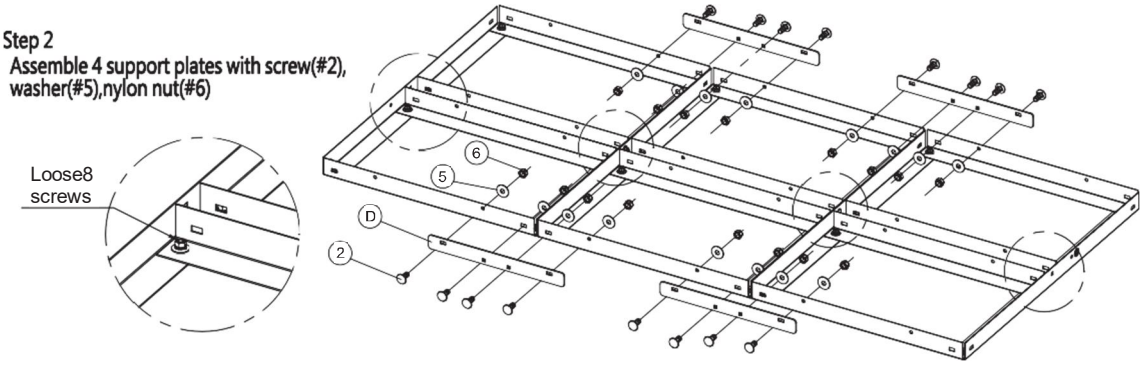

Step 3

Assemble 2 mast poles with screw(#3),washer(#5),nylon nut(#6)

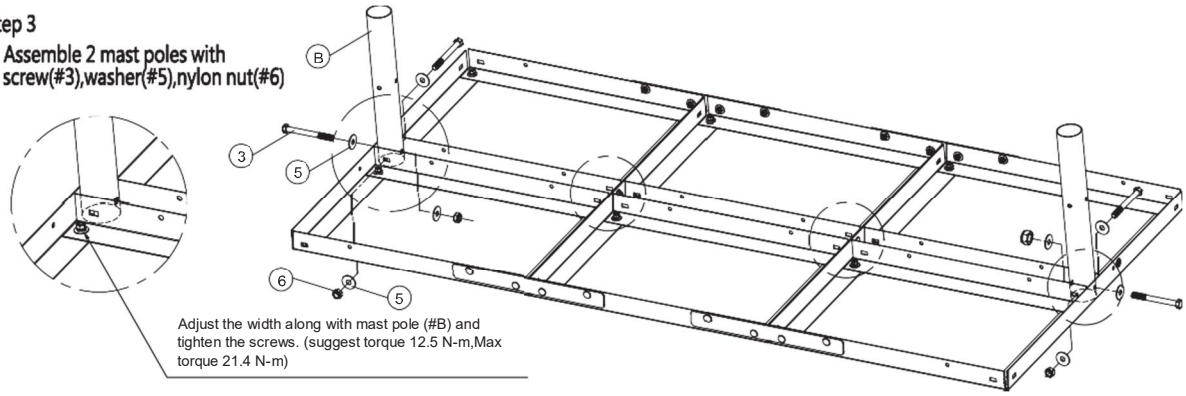

Step 4

Assemble 2 side supporting rods with screw(#1/#3) ,washer(#5),nylon nut(#6)

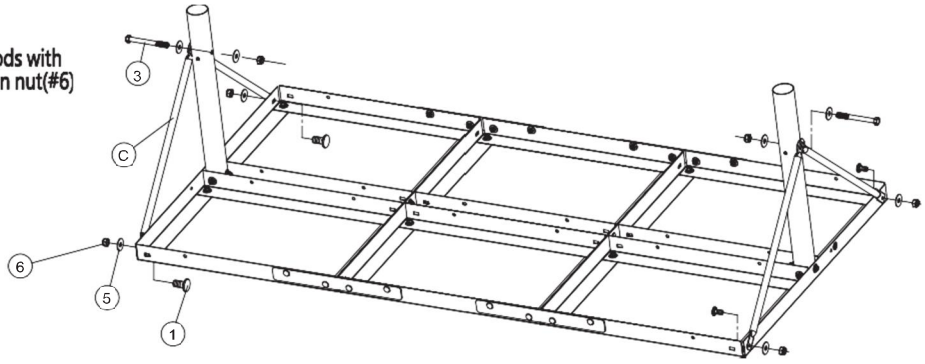

Step 5

Assemble 2 side supporting rods with screw(#3/#4) ,washer(#5),nylon nut(#6) ,and bush(#7)

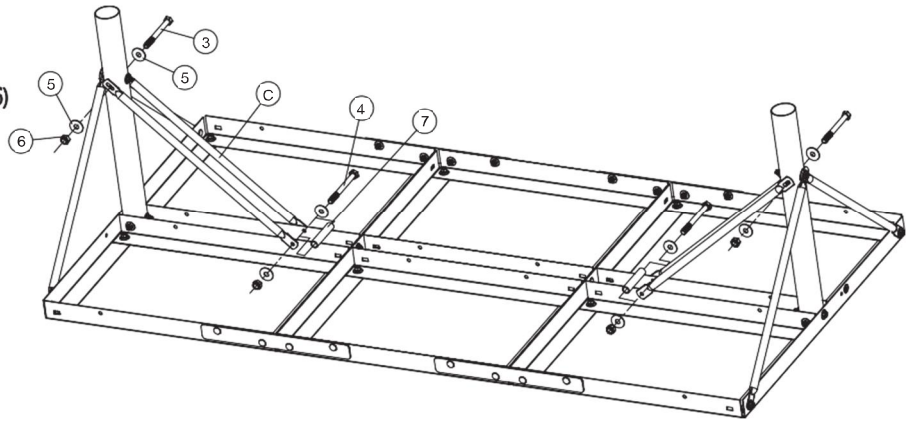

Step 6

Assemble ground cable with screw(#8) and kepts k-lock nut(#9)

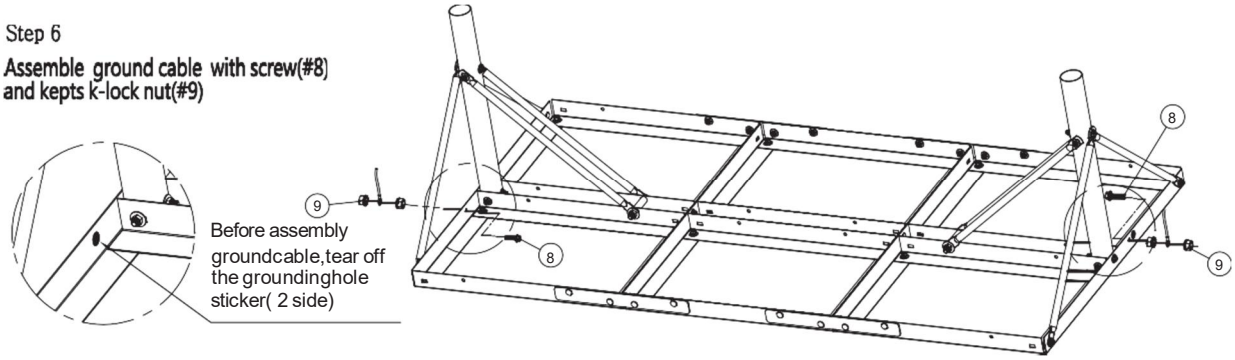

Penetrating fastener option:
For directly mounting using fasteners, place appropriately rated fasteners, at the locationscircled in diagram.

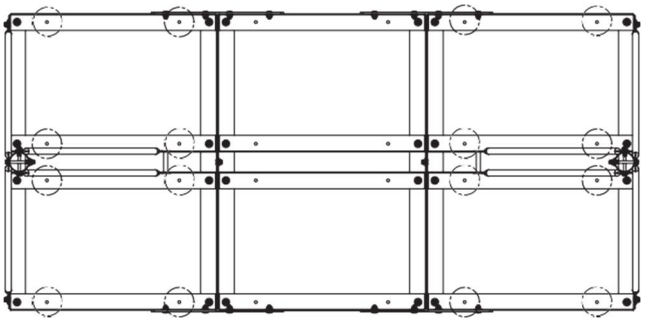

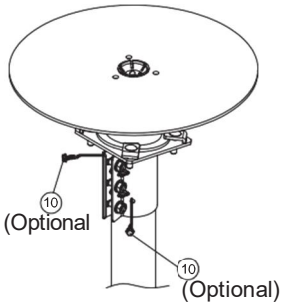

4.4.3 Placing Antenna on Fine Tune

1. Fasten the lifting straps (separate purchase) to the antenna unit. Check the condition of the lifting strap and ensure the shackle is tightened up. Lift the antenna above the Fine Tune using a crane and carefully lower down the antenna toward the Fine Tune.

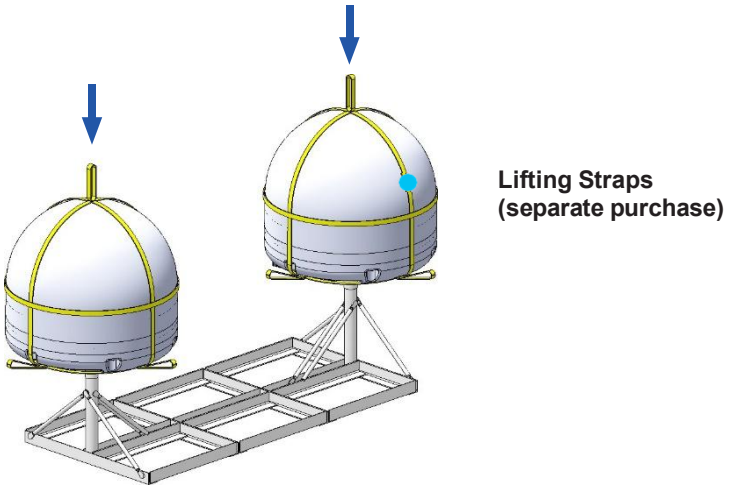

Figure 7: Placing Antenna on Fine Tune of NPM

WARNING

When moving the antenna, it may sway by windy. Be careful when handling the antenna.

4.4.4 Placing Concrete Blocks on Base Panels

1. Place the concrete blocks on the base panel to hold the weight of the antennas.
   One concrete block is 39 x 19 x 19 cm/17.56 kg.
   The area of the assembled base panel is 200 x 70 cm.

2. Arrange 18 concrete blocks on the base panel in a single layer.
   The total weight of 18 concrete blocks is 316.08 kg.

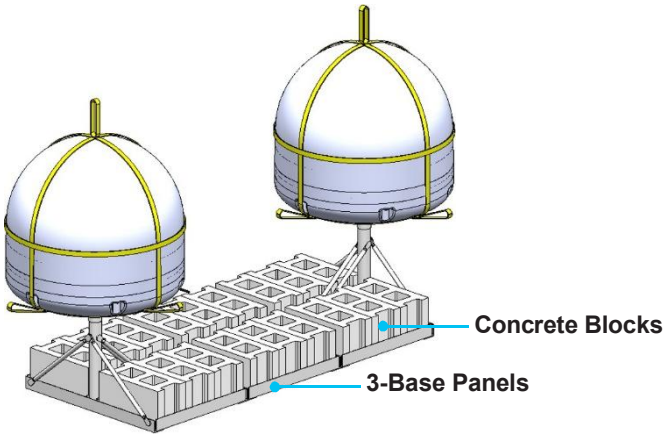

Figure 8: Placing Concrete Blocks on Base Panel of NPM

4.5 Placing Antenna on Mast (Optional)

1. Fasten the lifting straps (separate purchase) to the antenna unit. Check the condition of the lifting strap and ensure the shackle is tightened up. Lift the antenna above the mast using a crane and carefully lower down the antenna toward the mast.

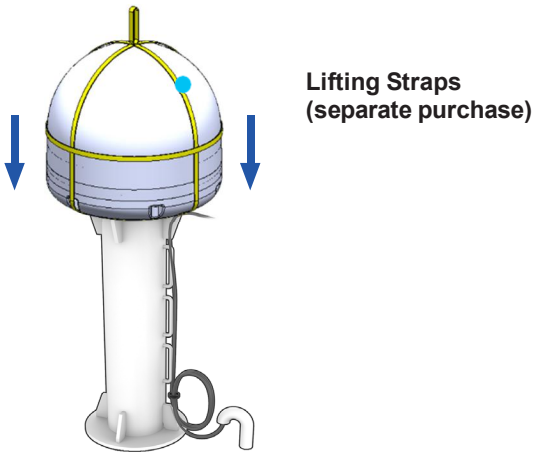

Figure 9: Placing Antenna on Mast

WARNING

When moving the antenna, it may sway by windy. Be careful when handling the antenna.

4.6 Mounting Antenna on Surface

1. Bring M12 x 30L Hex Bolt sets (4 ea, customer supplied).
2. Place the antenna on the surface and align the mounting holes of the antenna with those of the surface.
3. Before assembling bolts, apply Loctite #263 to the bolt threads to ensure the bolts are fastened firmly. Insert the bolts and washers from under the mast into the radome, and lightly tighten them by hand into the built-in nuts on the bottom of radome. Install 4 bolts in a criss-cross sequence as shown in the figure.
4. After installing all 4 bolt sets, fully tighten the bolts using a torque wrench.
5. After mounting the antenna on the surface, remove the lifting strap.

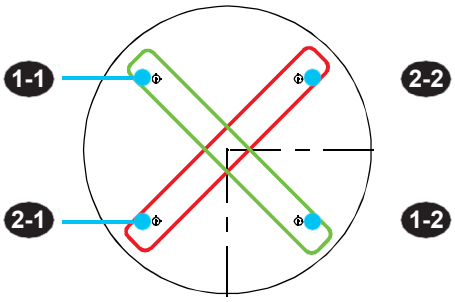

Figure 10: Installing Sequence of Bolts

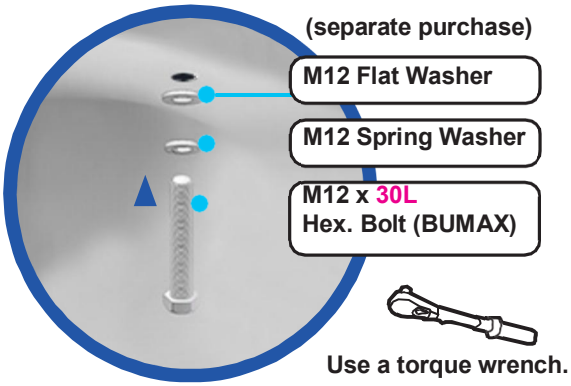

Figure 11: Installing Bolts for Mounting Antenna

NOTE

- Make sure the cable from BDU is aligned with the cable connector on the bottom of antenna for stable connection.
- Refer to "10.2 Appendix B. Tightening Torque Specification" on page 47 for the bolt tightening torque.

WARNING

If a bolt does not fit into the mounting hole when installing the bolt by hand, stop installing and check the bolt size. DO NOT tighten the bolts forcefully. It may cause damage to the inner threads of the mounting holes of antenna. In this case, the damage is not covered by the warranty.

4.7 Connecting Cable to Antenna

NOTE

Make sure the followings before installing system cables.

1. All cables need to be well clamped and protected from physical damage and exposure to heat and humidity.
2. Don't use any acutely bent cable.

4.7.1 Connecting Cable to Primary Antenna

Connect the MoCA Cable from the MoCA port of the CNX to the Power & Data connector on the bottom of the primary antenna radome.

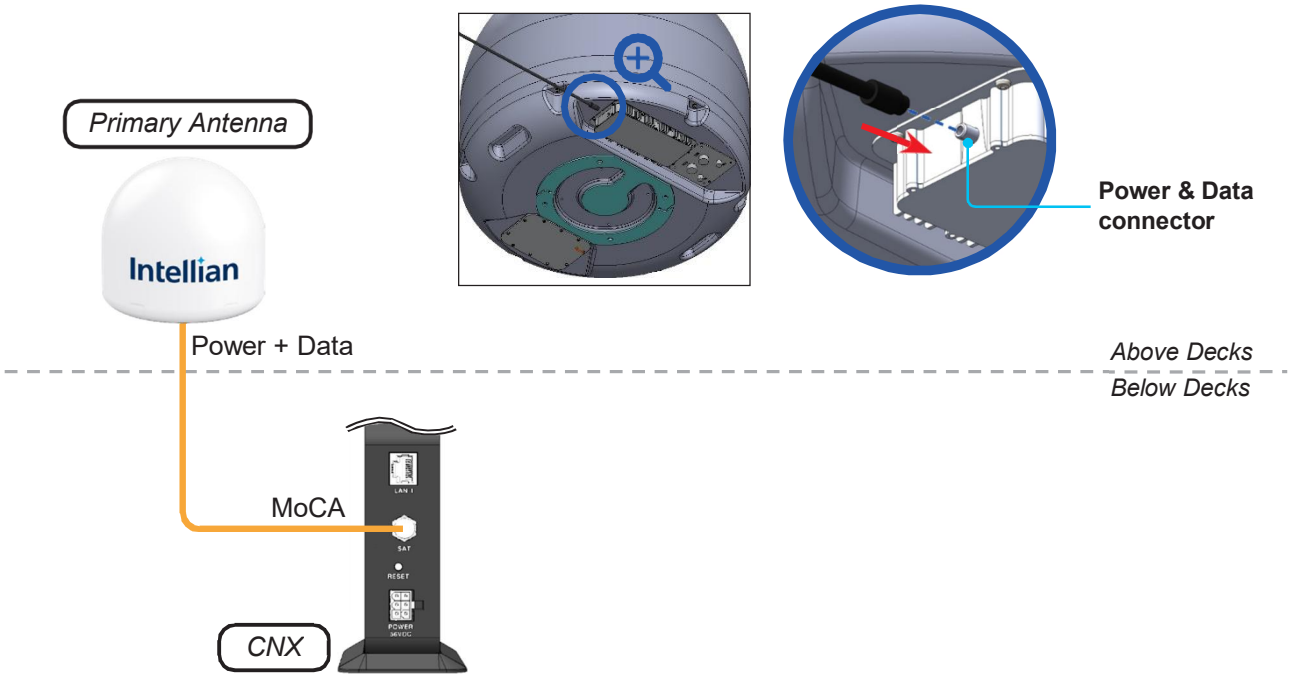

Figure 12: Cable Connection of CNX to Antenna

NOTE

To connect the primary antenna to CNX, use the 30-m long MoCA cable (RG6) supplied in the installation kit. The maximum cable length recommended is 30 m for RG6 cable and 100 m for RG11 cable. Separate purchase of cable is required if you need a longer cable connection.

4.7.2 Connecting Primary Antenna to Secondary Antenna

1. Connect the RF (Rx) Cable from the Rx port of the Primary antenna to the Rx port of the Secondary antenna.
2. Connect the RF (Tx) Cable from the Tx port of the Primary antenna to the MNT (Management (Tx)) portof the Secondary antenna.
3. Connect the Ethernet Cable from the ETH (LAN) port of the Primary antenna to the ETH (LAN) port of theSecondary antenna.
4. Connect the Signal Cable from the SIG (Signal) port of the Primary antenna to the SIG (Signal) port of the Secondary antenna.

CAUTION

- DO NOT over-tighten the connector, nuts, or screws when mounting the antenna to prevent any damage.
- DO NOT leave any cables loosen and non-fixed, especially for those installed outside of the antenna.

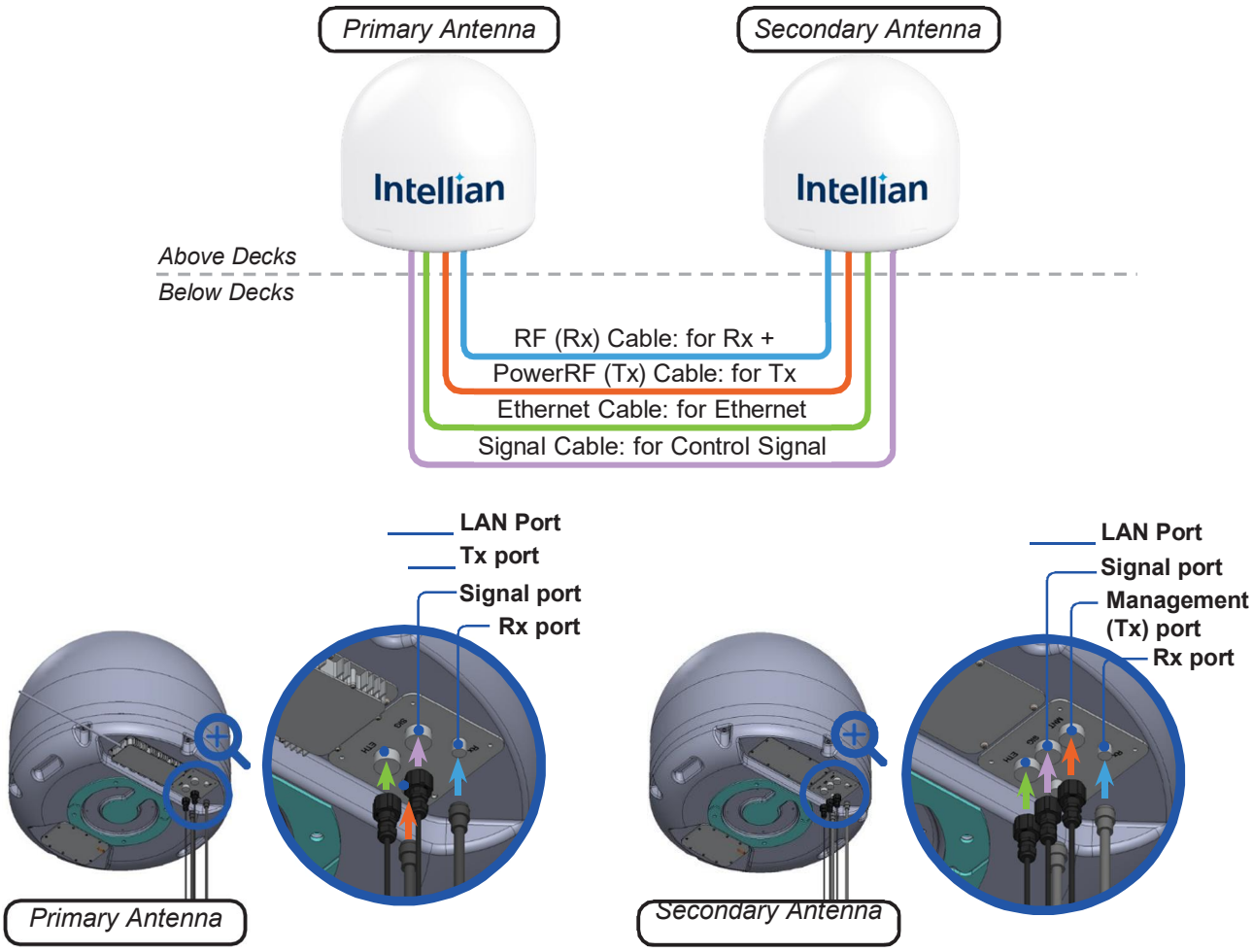

Figure 13: Cable Connection Between Two Antennas

NOTE

To connect between the primary and secondary antennas, 5-m long RF cable (LMR400) is supplied in the installation kit. You can use 5, 10 or 20 m long RF cables for the inter-dome connection.

4.8 Grounding Antenna

Direct grounding for the antenna is very important for safety. Your radio hardware must be protected from lightning strikes or static electricity by grounding. When establishing your grounding system, it must comply with the safety standards in your country.

Gound all the antennas in use separately.

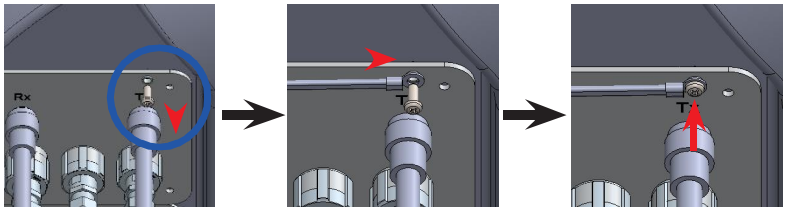

Figure 14: Grounding Antenna

Chapter 5. Installing Below Deck Unit (BDU)

5.1 CNX Dimensions

Confirm the dimension of the CNX before installing it.

Unit: mm (inch)

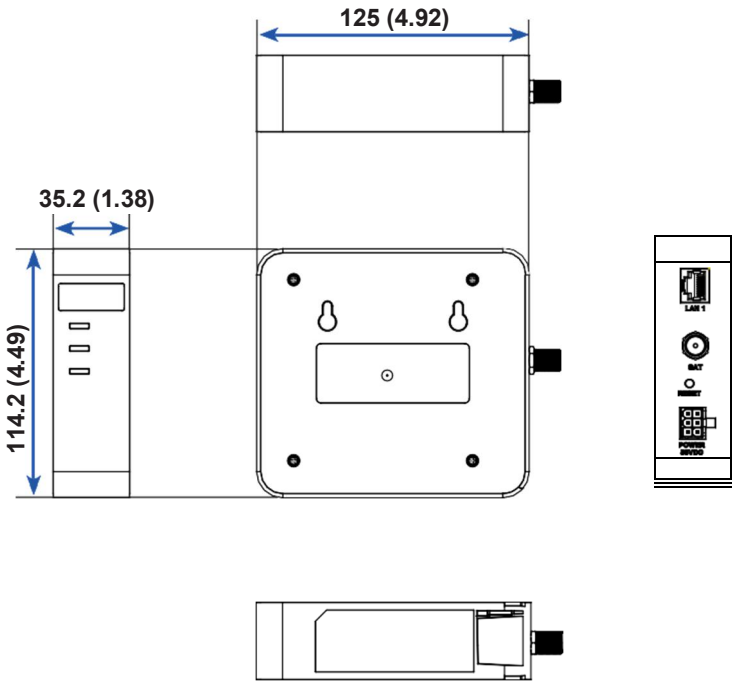

Figure 15: CNX Dimensions

5.2 Antenna System Configuration

For the proper operation of your satellite communication system, it must be connected with all the providedcomponents as shown in the figure.

The basic antenna system consists of two antennas and a CNX.

The Primary Antenna Includes the SSM Module, which is capable of controlling and managing two antenna systems simultaneously.

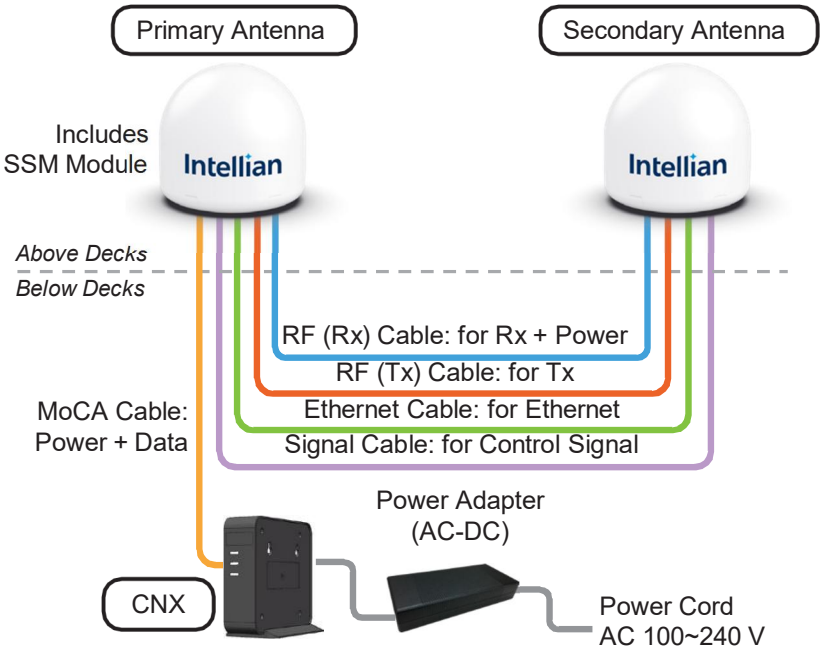

Figure 16: Dual Antenna System Configuration

5.3 CNX Cable Connection

5.3.1 CNX Back Panel Connectors

The following figure shows the CNX back panel.

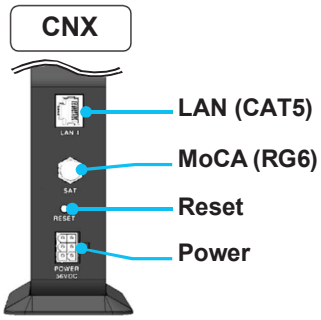

Figure 17: Back Panel Connectors

5.3.2 CNX Connector Pinout Guide

Check the following connector pinout information applied to the connection ports of the CNX.

- **LAN Connector**

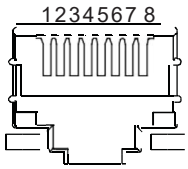

RJ-45 Female

Pin	Signal
1	BI_DA+
2	BI_DA-
3	BI_DB+
4	BI_DC+
5	BI_DC-
6	BI_DB-
7	BI_DD+
8	BI_DD-

- **MoCA Connectors**

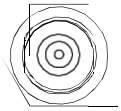

RF F Type Female

Conductor	Function
Inner	Power + Data
Outer	GND

- **Power Connector**

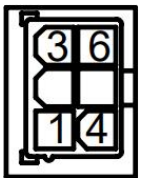

6 Contect Power Plug Male

Pin	Signal
1	+56V DC
2	NC
3	+56V DC
4	GND
5	NC
6	GND

CAUTION

- Make sure that your system installer has connected the Co-axial cable shield to the grounding system of the building, as close to the point of cable entry as practical. The common or earthed side of the connected (SELV) circuits and any accessible metal parts should be connected to the screen of the coaxial cable.
- The cable distribution system should be grounded (earthed) in accordance with ANSI/NFPA 70, the National Electrical Code (NEC), in particular Section 820.93, Grounding of Outer Conductive Shield of a Coaxial Cable.

Chapter 6. Operating CNX

6.1 CNX Front Panel View

Check the connection status with the LED indicators on the front panel of CNX.

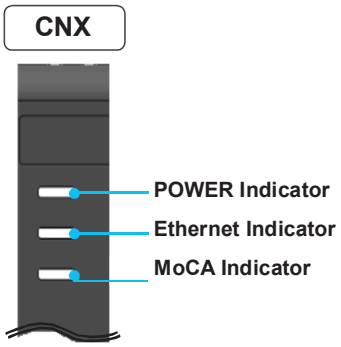

Figure 18: Front Panel View of CNX

The following table shows status indicators on the CNX.

LED Indicators	Color	Description
POWER	Steady Green	The CNX is powered on.
	Off	The CNX is powered off.
Ethernet	Steady Green	The user network is ready.
	Blinking Green	The user network is connected.
	Off	The user network is not connected.
MoCA	Blinking Green	The CNX-MIM MoCA is connected. Its blinking frequency changes by the signal traffic.
	Off	The CNX-MIM MoCA is not connected properly.

Chapter 7. Using Local User Interface (LUI)

7.1 Introduction

With the embedded Using Local User Interface (LUI) software, the antenna can be monitored, controlled,and diagnosed remotely from anywhere, anytime through TCP/IP protocol. It saves your time and cost generated by various maintenance activities such as operating firmware upgrades, tracking parameter resets, and system diagnosis, etc.

7.2 Requirements to Access OneWeb Web Interface

The LUI is accessed by web browsers such as Microsoft Edge, Firefox, Chrome, Safari or by iOS mobile devices.

Below is a list of the minimum PC hardware and software requirements to install and run the program.

- **Hardware**

Hardware	Requirements
CPU	Intel® Pentium® 4 or higher
Memory	512MB or higher
Video Card	DirectX9.0 or higher supported H/W acceleration supported Video Memory 128MB or higher
HDD	1GB or higher

- **Operating System and Software**

Software	Requirements
Operating System	Windows XP SP or higher

NOTE

LUI works on Internet Explorer 11 or higher (Windows 7 or higher editions), Firefox, Microsoft Edge and Chrome web browsers.

7.3 Turning On System

Make sure the antenna has a clear view of the sky. The primary antenna has to be connected to the CNX and powered up in order to access the webpage.

7.4 Accessing Webpage

7.4.1 TCP/IP Connection through LAN Port

The network is automatically configured by DHCP with no additional PC IP configuration.

1. Connect an Ethernet cable from the LAN port on the front panel of CNX to a LAN port of PC. The Data LED indicator will turn Green if CNX is connected.
2. Enter the IP address into your web browser's address bar to log in to the Local User Interface (LUI).

- **IP Address: 192.168.100.1 (Default)**

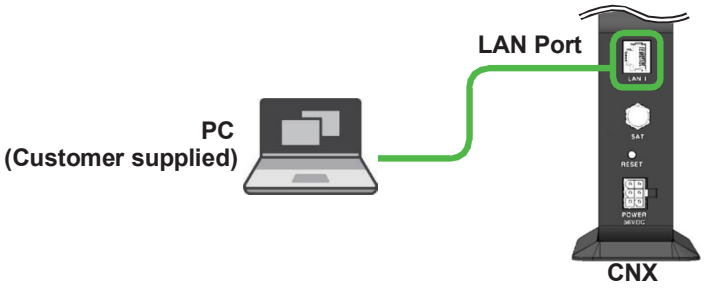

Figure 19: Back Panel LAN Port Connection

7.5 Webpage Layout

Once you log in, the following information and menus are displayed.

7.5.1 Navigation bar

The navigation bar as shown below is the primary way being able to navigate the LUI. The navigation bar is persistent across all LUI pages.

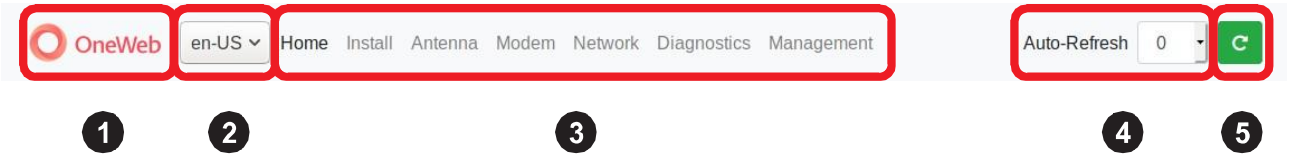

No.	Item	Description
1	Logo	This is the banner that displays the branding logo. Clicking on the logo on any given page will return the LUI to the homepage.
2	Language Drop Down Menu	The language drop-down menu lists all supported languages. Picking a language from the drop-down menu will change all text to the specified language immediately. The default language and available languages are specified in the 'i18n.json' file.
3	Navigation Items	These are the navigation items on the navigation bar. Clicking on a section will take you to a different part of the LUI. The sections are as follow: • Home: The homepage of the LUI displays a high-level overview of most components via a card layout. • Install: Guides the user through the installation process. More information on the installation process can be found in the "7.7 Starting Install Menu (Install Wizard)" on page 38. • Antenna: Displays Antenna Information such as the API Version, Firmware, and the Vendor as well as statistics on all the various antenna messages sent and received from the SSM. • Modem: Displays Modem Information (IMEI, Manufacturer, Software Version, etc.), Modem Status (Call Status, Operating mode, etc.), OneWeb Extension Statistics, and GNSS Statistics.
3	Navigation Items	• Network: Displays statistics for all the network interfaces on the SSM such as the CNX interface, MGT interface, and WAN interface. • Diagnostics: Contains most of the SSM related statistics and configuration. Displays information such as the UT Status, Sensor Information, Host Processor Logs, and Event Logs. • Management: Displays UT Network Management Information such as SDL Information and UCR Statistics.
4	Auto-Refresh	This is the auto-refresh dropdown. Choosing an interval other than 0 will, if the page supports auto-refresh, fetch the data again at the specified interval.
5	Reboot	This is the reboot button. Clicking this button will trigger an SSM reset. While the SSM is rebooting, the reboot button turns from green to red. Upon successful reboot, the LUI will automatically refresh the page and the reboot button will go back to being green.

7.5.2 Home Page

The home page consists of several cards that display a high-level overview of certain components such as the UT System, Antenna, or UT Network Management. Each card has a border that, depending on the status of the subsystem, changes color. If the subsystem is in a bad state, the card is outlined in red. If the subsystem is behaving as normal, then the card is outlined in green. Clicking on a card will take you to the webpage where you can find more detailed information about the subsystem.

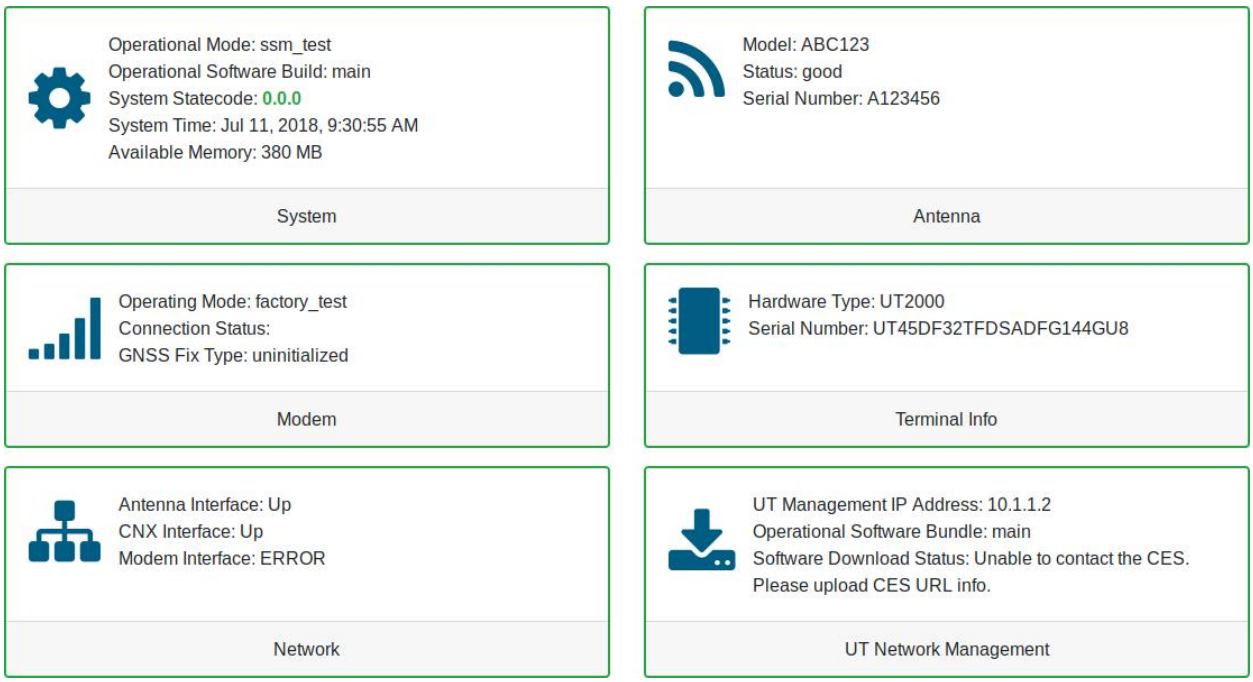

7.5.3 Footer

The footer, like the navigation bar, is persistent throughout all LUI pages. The footer contains two pieces of information: one on the left and one on the right.

The current software version that is running on the Host Processor is displayed on the left. The operational software mode follows the software version. If the operational software mode is a factory, the text color is red. If the operational software mode is main, the text color is green. Clicking on this will take you to the **UT Status** section of the Diagnostics page.

The system uptime is displayed on the right. It displays how much time has passed since the last reboot. The format is days:hours:minutes:seconds.

7.6 Starting Install Menu (Install Wizard)

The Install Wizard will give you a guide by going through the steps of setup for the antenna system commissioning. We highly recommend using this wizard to complete your installation and commissioning of the system. After accessing LUI main page, go to the **Install** menu on the navigation bar and perform the wizard.

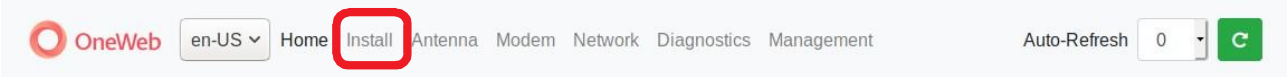

The LUI Installation page serves as the front end for installation.

7.6.1 Installation Navigation

At the top of the installation, the page is the installation navigation. At the top is a progress bar that displays what percentage of the installation process is complete. An auto advance button on the left that, when enabled, advances the installation to the next step once the current step has either finished or is not required.

On the right are three buttons:

- **Start Over** button: Brings you back to the first step of the installation.
- **Back** button: Steps one step back in the installation.
- **Next** button: Advances to the next step in the installation.

If a given state is required, the Next button is disabled, and the installation can not proceed until the current step has been completed.

7.6.2 Initial Install Page

The first page of the installation process is a splash screen that states that the UT has not yet beeninstalled. To proceed with the installation to the next step, click on **Start Installation** or **Next**.

7.6.3 Upload Software Bundle

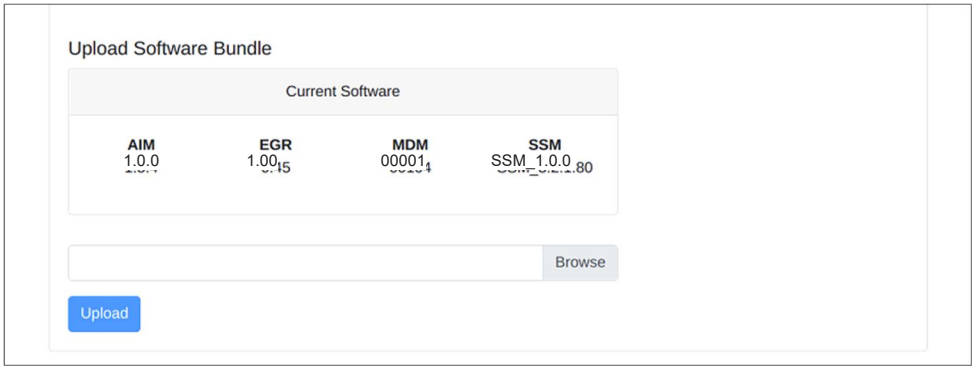

The Upload Software Bundle page displays the current software versions running on each component. Clicking on the empty text box or the **Browse** button allows the upload of a Software Bundle. Until a bundle has been uploaded, the **Upload** button is greyed out. If the upload is not successful, a status error message will be displayed.

7.6.4 New Software Listing

Upon a successful upload, the New Software version is displayed beneath the current software along with a prompt. Clicking **No** deletes the bundle file that was uploaded and returns you back to the beginning of the state in which you must upload another bundle file. Clicking **Yes** then triggers the next step of this state which is performing the updates. If an update fails for any given component, an error message is displayed and the SSM stops attempting to update the rest of the components. Upon a successful update, the SSM will reset itself and the LUI will refresh the page once the SSM has finished rebooting. After this, you can click advance to the next state.

7.6.5 Upload Ephemeris Data

The Upload Ephemeris Data page is a simple file upload page. Simply click on the empty text box or the **Browse** button to upload an Ephemeris file. Until a file has been uploaded, the upload button is greyed out. Upon a successful upload, a success status message will be displayed, and the state can be advanced. Click on **Next**.

7.6.6 RF Cable Setup

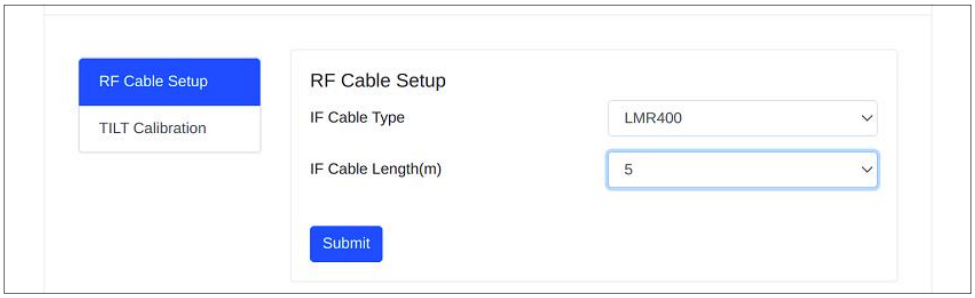

Intellian provides the Antenna RF Cables (LMR400, 5 m) as default. Choose the **LMR 400** on the **IF Cable Type** and the **5** on the **IF Cable Lenght(m)** from the drop-down list. Click on **Submit**.

NOTE: The RF cable type and length value must be the same as the RF cable being used.

7.6.7 TILT Calibration

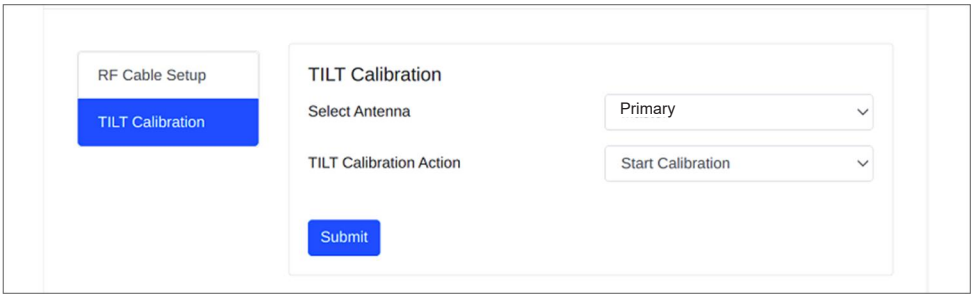

The Tilt Calibration must be applied to both the primary and secondary antennas. Choose the **Primary/ Secondary** on the **Select Antenna** and select the **Start Calibration** on the **TILT Calibration Action** from the drop-down list. If you select the **Stop** on the **TILT Calibration Action** and Click the **Sumit**, the antenna system will stop the tilt calibration.

Click on **Submit**, then click on **Next**. The antenna system will start the tilt calibration.

7.6.8 GNSS Configuration

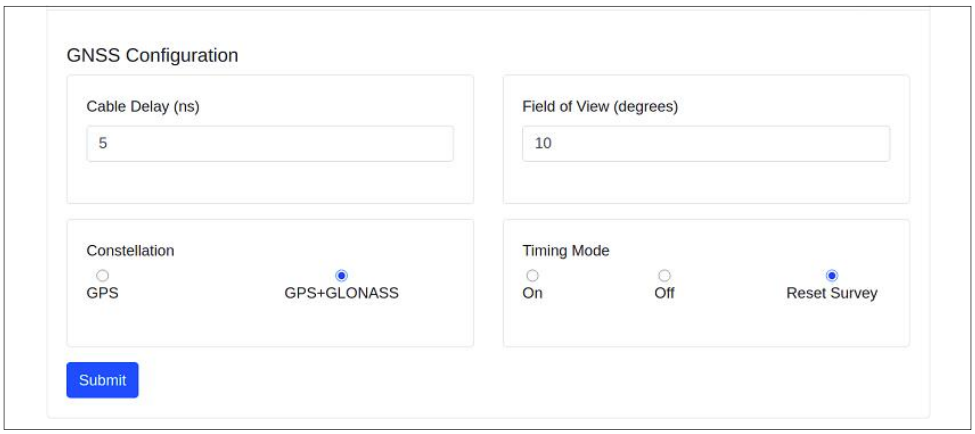

GNSS Configuration page has multiple forms which you can specify the: Cable Delay, Field of View, Constellation, and the Timing Mode. Click on **Submit**, then click on **Next**.

7.6.9 Configure Blockage Zones

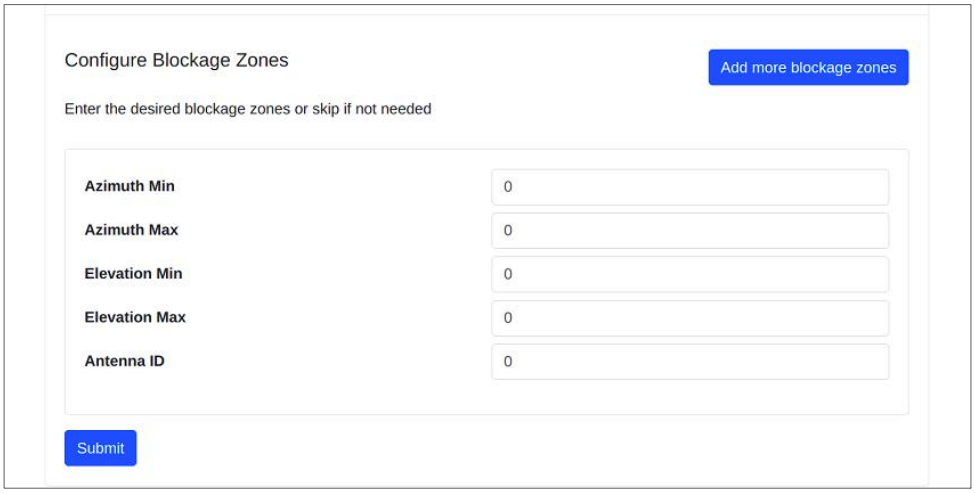

This page allows you to configure blockage zones for an antenna id. Clicking on **Add more blockagezones** will add another blockage zone to configure.

- Azimuth values must be between 0 and 360.
- Elevation values must be between 0 and 90.

Click on **Submit**, then click on **Next**.

7.6.10 Antenna Leveling

The antenna leveling page displays the current sensor data received from the antenna. The “Tilt Pitch: degrees” and “Tilt Roll: degrees” are displayed. If the degree values meet the tolerance, the card for the corresponding antenna is outlined in Green; otherwise, it is outlined in Red. Click on **Next**.

7.6.11 Autonomous States

Autonomous states all display a progress bar of its progress. The following states require no action from the user aside from proceeding to the next state. All installation state is displayed, or some installation status is displayed underneath the progress bar.

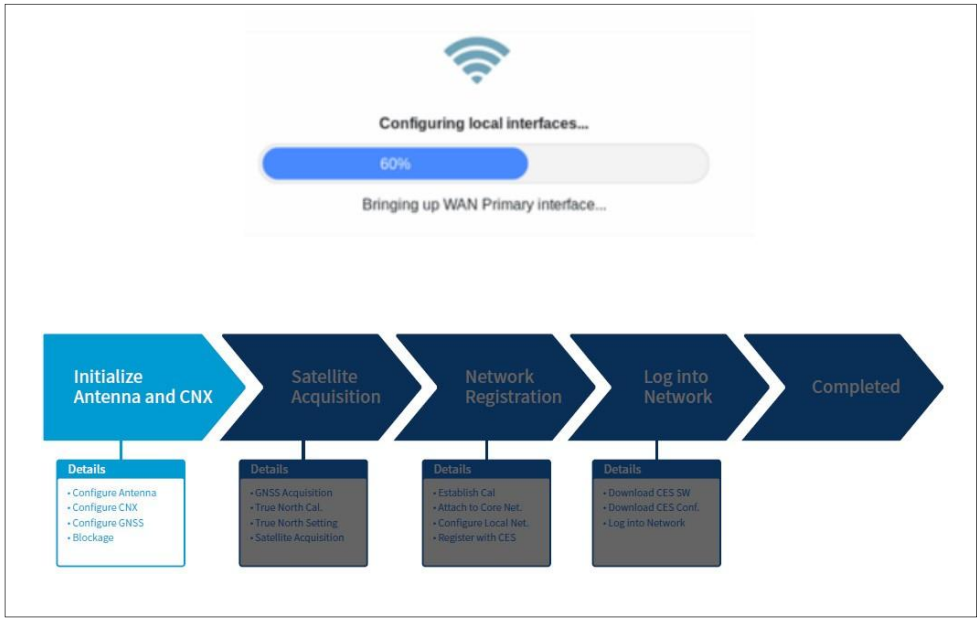

Chapter 8. Specification

8.1 Technical Specification

8.1.1 RF Specification

Item	Specification
Reflector Size	730 mm (28.74")
Operating Frequency	Rx : 10.7 ~ 12.7 GHz
	Tx : 14.0 ~ 14.5 GHz
Polarization	Rx: RHCP
	Tx: LHCP
G/T @ 11.8 GHz (Clear sky @30° Elevation)	Min. 12.2 dB/K
Gain with radome	Rx: 37.0 dBi @ 11.8 GHz
	Tx: 38.5 dBi @ 14.25 GHz
EIRP	36.6 dBW / 40 MHz (dual carrier) 33.6 dBW / 20 MHz (single carrier)
Cross Polarization Isolation	Min. 20 dB
L-band IF Operation	1850 ~ 2100 MHz

8.1.2 Mechanical & Power Specification

Item		Specification
Weight	Antenna	20 kg (44.09 lbs)
	Radome	Primary Antenna: 12 kg (26.45 lbs) Secondary Antenna: 11 kg (24.25 lbs)
	Total	Primary Antenna: 32 kg (70.54 lbs) Secondary Antenna: 31 kg (68.34 lbs)
Radome Size	Height	770 mm (30.31")
	Diameter	Ø845 mm (33.26")
Platform		3-axis: Azimuth, Elevation, Cross-Level
Pedestal Motion Range	Azimuth	-270° to +270°
	Elevation	-53° to +53°
	Cross-Level	-10° to +10°
Antenna Power Source		56 V DC from CNX
CNX Power Source		56 V DC from adapter
Adapter Power Source		100-240 V AC, 50 ~ 60 Hz
Power Consumption		Primary: 76 W average, max. 80 W Secondary: 76 W average, max. 80 W

8.1.3 Environmental Specification

Item	Specification
Operational Temp.	-40°C ~ +55°C (w/ optional heating device) -25°C ~ +55°C (w/o heating device)
Survival Temp.	-40°C ~ +80°C
Storage Temp.	-40°C ~ +85°C
Storage Environment	ETSI EN 300 019 Class 1.1
Operational Humidity	Relative humidity range of 10% to 100% non-condensing in accordance with IEC60068-2-78 for a period of 96 hours.
Non-operational Humidity	IEC 60068-2-41 Method Db for a period of 4 hours.
Operational Vibration	IEC 60068-2-64, .01 - .02 PSD, slope +12, 5 to 10 Hz .02 PSD, slope 0, 10 to 50 Hz .02 - .001 PSD, slope -12, 50 to 100 Hz
Non-operational Vibration	IEC 60721-3-4, Class 4M3 3.0 mm peak (+/- 1.5) (2-9 Hz) 5 m/s2 (9-200 Hz) IEC 60068-2-6 with test duration of 5 sweeps per each of the 3 axes.
Operational Shock	IEC 60068-2-27
Non-operational Shock	IEC 60068-2-27
Weather Tightness	IP66 per IEC 60529
Lightning Protection	IEC 61000-4-5 Class 4 ETSI EN 300 132-2
Hail Impact	ASTM E822
Operating Wind Resistance	80 km/hr (50 mph)
Functional Wind Resistance	81-160 km/hr (51 mph ~ 100 mph)
Survival Wind Resistance	161 km/hr ~ 240 km/hr (101 mph ~ 150 mph)
Chemical conditions	Per IEC 60068-2-60, Method 4
Lightening	IEC 61000-4-2 (ESD) IEC 61000-4-4 (EFT) IEC 61000-4-5 (Surge)

Chapter 9. Warranty

Intellian systems are warranted against defects in parts and workmanship, these warranties cover THREE (3) YEAR of parts and TWO (2) YEAR of factory repair labor to return the system to its original operational specification.

Warranty periods commence from the date of shipment from Intellian facility, or date of installation which is come sooner. Providing maximum 6 months Warranty additionally if submission of authorized form which is described installation occurs within 6 months from the shipment date.

Intellian Technologies warranty does not apply to product that has been damaged and subjected to accident, abuse, misuse, non-authorized modification, incorrect and/or non-authorized service, or to a product on which the serial number has been altered, mutilated or removed. Intellian Technologies, will (at its sole discretion) repair or replace during the warranty period any product which is proven to be defectivein materials or workmanship, in accordance with the relevant product warranty policy. All products returnedto Intellian Technologies, during the warranty period must be accompanied by a Service Case reference number issued by the dealer/distributor from Intellian Technologies, and (where applicable) a copy of the purchase receipt as a proof of purchase date, prior to shipment. Alternatively, you may bring the product to an authorized Intellian Technologies, dealer/distributor for repair.

Chapter 10. Appendix

10.1 Appendix A. Pre-Installation Checklist

This pre-installation checklist describes important considerations before installing the UT. It must be completed by the certified installer to install in a safe location. Please fill out the general information below.

Date of Survey:
Date of Install (If different from installation date):

Installer Information
- Company Name:
- Installer's Name:
- Contact Phone Number:
- Address:
- Email:

Customer Information
- Organization Name:
- Customer Name:
- Phone Number:
- Address:
- Email:
- Site Location (Lat / Long.):
- UT Type Being Installed (w. CNX):

The following checklist is to be completed by the Installer.

Building / Site checklist

Check Item	Result
The proposed antenna mount type is checked. (Roof Mount / Ground Mount / Ground Level Pole Mount / Pole Mount Bolted to Wall / Custom Mount / Etc.)	*(Fill out)*
The location of the site is checked. (Urban / Semi-urban / Rural / Remote)	*(Fill out)*
The building external wall composition is checked. (If mounted on the building)	*Yes / No / N/A*
The visibility of the antenna to the public is checked.	*Yes / No / N/A*
The safety from unauthorized access is checked.	*Yes / No / N/A*
The roof space/floor space availability based on mount type is checked.	*Yes / No / N/A*
The roof/soil composition based on mount type is checked.	*Yes / No / N/A*
The lightning protection availability is checked.	*Yes / No / N/A*

Expected Obstructions / Possible Interference checklist

Check Item	Result
The field of view to satellite constellation is checked.	*Yes / No / N/A*
The no interference with RF transmitters is checked.	*Yes / No / N/A*
The no interference by high voltage lines, power cables, and telephone cables is checked.	*Yes / No / N/A*
The no other possible sources of interference are checked.	*Yes / No / N/A*
The map of no obstruction is checked. (Also updated into UT configuration as an array of AZ, EL coordinates.)	*Yes / No / N/A*

10.2 Appendix B. Tightening Torque Specification

This table shows the recommended values of tightening torques.

Bolt Size	Tightening Torque (N-m)
M2	0.5
M2.5	1
M3	1.5
M4	3
M5	6
M6	12
M8	27
M10	50
M12	85
M14	130
M16	200

10.3 Appendix C. Installing Heating Device

The heating device kit can be purchased separately. In order to install and operate the heating devices successfully, a thorough review of this document is strongly recommended.

1. Safty Precautions

The following safety precautions must be observed during operation. Intellian has no liability for the customer's failure to comply with these requirements.

WARNING: HAZARDOUS VOLTAGE

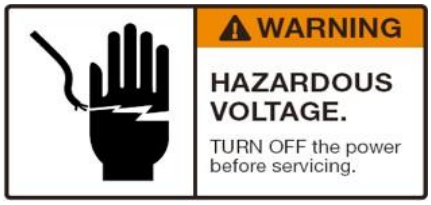

WARNING: HOT SURFACE

2. Installing Heating Device

1. Remove M5 x 20L Hex Wrench bolt (10 ea) using a 4-mm hexagonal wrench. Detach the radome hatch from the radome bottom.

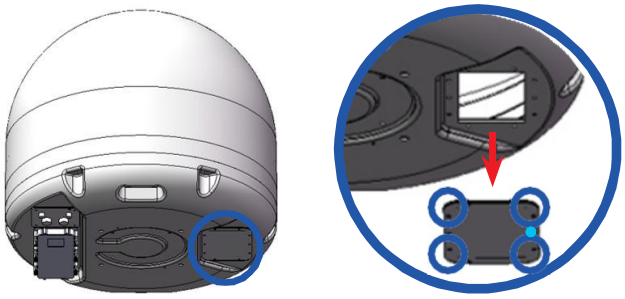

Detach Radome Hatch

NOTE

DO NOT reuse the removed bolts.

2. Assemble the heating device assembly to the radome hatch position using a M5 x 20L Hex Wrench bolt (10 ea). Fasten the bolt using a 4-mm hexagonal wrench.

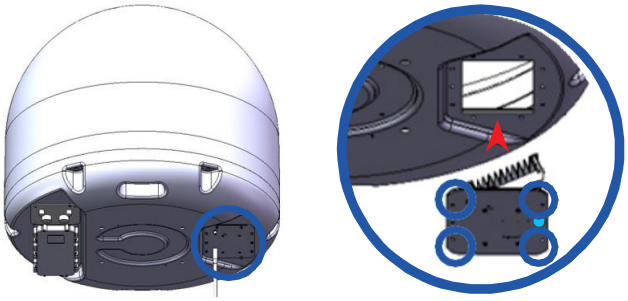

Assemble Heating Device Assembly

3. Connect the power cable to the power connector on the heating device from the CNX.

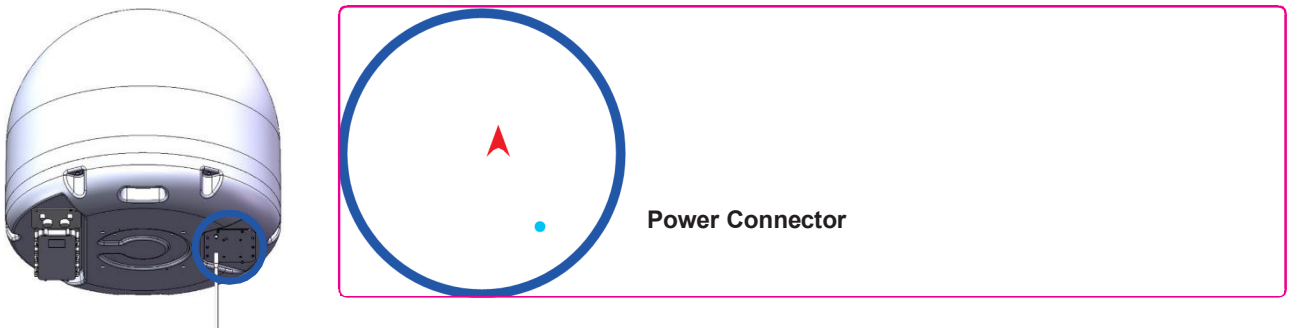

4. Power on the CNX to operate the heating device. The thermostat of the heating device is set at the factory so separate temperature setting is not required.

10.4 Appendix D. Certifications

This device complies with part 15 of the FCC Rules and with Industry Canada licence-exempt RSS standard(s).

Operation is subject to the following two conditions:

(1) This device may not cause harmful interference, and

(2) this device must accept any interference received, including interference that may cause undesired operation.

L'émetteur/récepteur exempt de licence contenu dans le présent appareil est conforme aux CNR d'Innovation, Sciences et Développement économique Canada applicables aux appareils radio exempts de licence. L'exploitation est autorisée aux deux conditions suivantes :

(1) L'appareil ne doit pas produire de brouillage;

(2) L'appareil doit accepter tout brouillage radioélectrique subi, même si le brouillage est susceptible d'en compromettre le fonctionnement.

Changes or modifications made to this equipment not expressly approved by Intellian Technologies, Inc. may void the FCC authorization to operate this equipment.

Radiofrequency radiation exposure Information:

This equipment complies with RED and FCC, IC radiation exposure limits set forth for an uncontrolled environment. This equipment should be installed and operated with minimum distance of 7.5 m between the radiator and your body.

This transmitter must not be co-located or operating in conjunction with any other antenna or transmitter.

Note: This equipment has been tested and found to comply with the limits for a Class B digital device, pursuant to part 15 of the FCC Rules. These limits are designed to provide reasonable protection against harmful interference in a residential installation. This equipment generates, uses and can radiate radio frequency energy and, if not installed and used in accordance with the instructions, may cause harmful interference to radio communications. However, there is no guarantee that interference will not occur in a particular installation. If this equipment does cause harmful interference to radio or television reception, which can be determined by turning the equipment off and on, the user is encouraged to try to correct the interference by one or more of the following measures:

- Reorient or relocate the receiving antenna.
- Increase the separation between the equipment and receiver.
- Connect the equipment into an outlet on a circuit different from that to which the receiver is connected.
- Consult the dealer or an experienced radio/TV technician for help.