ocean SIGNAL

User Manual

rescueME

EPIRB2

Class 2, Category 2

Emergency Position Indicating Radio Beacon

with RLS

English

www.oceansignal.com

© 2023 Ocean Signal Ltd

The technical data, information and illustrations contained in this manual were believed to be correct at the time of print. Ocean Signal Ltd reserve the right to change specifications and other information contained in this manual as part of our continual improvement process.

No part of this manual may be reproduced, stored in a retrieval system or transmitted in any form, electronic or otherwise, without the prior permission of Ocean Signal Ltd.

No liability can be accepted for any inaccuracies or omissions in this manual.

Ocean Signal® and rescueME® are registered trademarks of Ocean Signal Ltd.

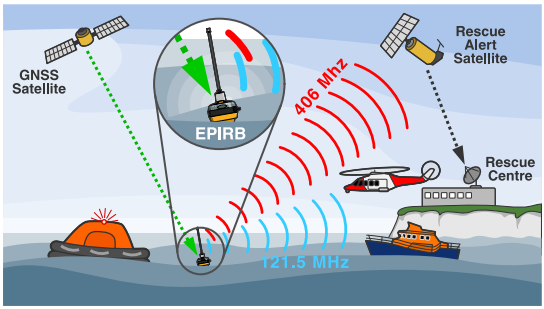

For ease of access please record details of your EPIRB2 here:

Owners Name: .....

Vessel Name: .....

Beacon HEX ID (UIN): .....

IN CASE OF EMERGENCY

USE ONLY IN SITUATIONS OF GRAVE AND IMMINENT DANGER

MANUAL ACTIVATION

1

2

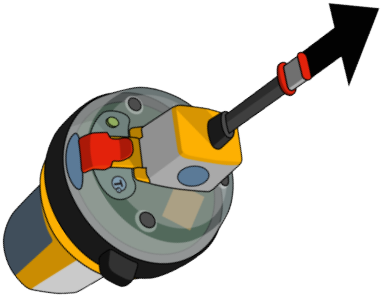

3

4

5

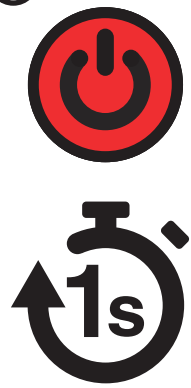

1. ABOUT YOUR EPIRB

1.1 COSPAS/SARSAT System

The basic Cospas-Sarsat concept is illustrated in the figure below.

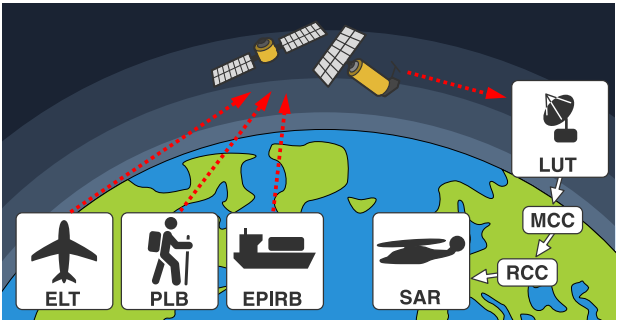

The System is composed of:

- distress radio beacons (ELTs for aviation use, EPIRBs for maritime use, and PLBs for personal use) which transmit signals during distress situations
- instruments on board satellites in geostationary and low-altitude Earth orbits which detect the signals transmitted by distress radio beacons
- ground receiving stations, referred to as Local User Terminals (LUTs), which receive and process the satellite downlink signal to generate distress alerts
- Mission Control Centers (MCCs) which receive alerts produced by LUTs and forward them to Rescue Coordination Centers (RCCs), Search and Rescue Points Of Contacts (SPOCs) or other MCCs

The Cospas-Sarsat System includes two types of satellites:

- satellites in low-altitude Earth orbit (LEO) which form the LEOSAR System
- satellites in geostationary Earth orbit (GEO) which form the GEOSAR System

The future Cospas-Sarsat System will include a new type of satellite in the medium-altitude Earth orbit (MEO) which will form the MEOSAR System. The EPIRB2 is fully compatible with the new MEOSAR satellites.

1.2 Return Link Service

The Galileo Return Link Service (RLS) is a free-of-charge global service available to Cospas-Sarsat RLS compatible beacons. The new functionality, currently offered uniquely by Galileo, enables a communication link that relays a Return Link Message (RLM) back to the originating beacon through the Galileo Navigation Signal in Space.
The RLS feature is an indication on the EPIRB2 that confirms to the User that the distress signal from the EPIRB2 has been localised by the Cospas-Sarsat system and is being sent to the SAR authorities. It does NOT mean that a search and rescue mission has been launched, but only confirms that the distress alert has been received by the Cospas-Sarsat system and is being routed to the appropriate SAR agencies.
The RLS aims to send an acknowledgment to the beacon within 30 minutes following activation (the response may not be received by the beacon for significantly longer).
RLS is an optional function and may not be permitted in all countries.
The full RLS specification can be found here:
https://gsc-europa.eu/sites/default/files/sites/all/files/Galileo-SAR-SDD.pdf

1. ABOUT YOUR EPIRB 4
1.1 COSPAS/SARSAT System 4
1.2 Return Link Service 5

2. GENERAL 7
2.1 Introduction 7
2.2 Exposure to RF Electromagnetic Energy 7
2.3 Warnings 7
2.4 What's in the Box 8
2.5 Operating Modes 8

3. EPIRB2 OVERVIEW 9

4. INSTALLATION 10
4.1 Location 10
4.2 Mounting Dimensions 10
4.3 Remove the EPIRB2 from the Mounting Bracket 11
4.4 Fit the Manual Mounting Bracket 11
4.5 Fit the EPIRB2 into the Mounting Bracket 11

5. OPERATION 12
5.1 Manual Release 12
5.2 Optical indications on activation 15
5.3 Deactivation 16

6. FALSE ALERTS 16

7. TESTING 17
7.1 NFC and Mobile App. 17
7.2 Beacon Test 18
7.3 GNSS Test 20

8. BEACON REGISTRATION 21
8.1 Advice to owners of EPIRBs 21
8.2 Country Specific Registration Information 21
8.3 UNREGISTERED BEACON 22

9. APPENDIX 22
9.1 Maintenance 22
9.2 Batteries 23
9.3 Decommissioning and Disposal 23
9.4 Transport 24
9.5 Specifications 25
9.6 Approvals 26
9.7 Spares 26

10. WARRANTY INFORMATION 27
10.1 Limited Warranty 27
10.2 Extended Warranty 27

2. GENERAL

2.1 Introduction

This manual provides valuable information for the installation, operation and routine maintenance of the EPIRB2.

Please read this manual completely before using your EPIRB2.

2.2 Exposure to RF Electromagnetic Energy

This product complies with EN62479 (EU) at a separation distance of 25 mm and with RSS-102 (Canada).

2.3 Warnings

⚠ **It is a legal requirement to register your EPIRB2 with your National Authority.**

⚠ **Only use your EPIRB2 in a situation of grave and imminent danger.**

⚠ **Deliberately misusing your EPIRB2 or setting it off accidentally may result in prosecution and a fine.**

⚠ **Contains Lithium batteries:**

- store between -30°C (-22ºF) to+70°C (+158ºF)

If the EPIRB2 is stored at higher temperatures the battery life may be degraded and should be replaced earlier than the date stated. Failure to do this may result in the EPIRB2 not fulfilling the stated 48hr operating life.

The effect is more pronounced as the temperature increases.

- DO NOT ATTEMPT TO REPLACE THE BATTERIES YOURSELF unauthorised opening and battery replacement may put your life at risk.

- do not short circuit, incinerate or recharge.

⚠ **Please see section 9.4 for information on safe transportation.**

⚠ **The battery in your EPIRB2 should be replaced immediately if it has been activated, or if the test indicator shows the battery as 'used', or if the expiry date marked on the unit has been exceeded.**

⚠ **Battery replacement must be carried out at an Ocean Signal authorised battery replacement centre using manufacturer supplied battery components.**

⚠ **Please read these instructions carefully. Failure to follow the guidance in this manual may result in loss of warranty.**

2.4 What's in the Box

1. EPIRB2
2. Manual Mounting Bracket
3. User Guide & Labels
4. Mounting Screws (x3)

2.5 Operating Modes

Your EPIRB2 may be operated in a variety of modes.

2.5.1 Manual Release and Automatic Activation

Should the vessel be in danger of sinking the EPIRB2 should be removed from its bracket, the antenna extended and then placed in the sea. Contact with the water will automatically activate the EPIRB2.

2.5.2 Manual activation on deck

When deploying the EPIRB2 on a deck, ensure it is vertical and clear of obstructions that might impede a clear view of the sky. If the unit is thrown into the water then it will activate automatically.

2.5.3 Manual activation in a life raft

The EPIRB2 may be deployed from a life-raft, where it should be held in a vertical position so that there is a clear view of the sky. It is recommended that the EPIRB2 is held outside of the canopy. The EPIRB2 can also be tethered to the life-raft and allowed to float alongside.

3. EPIRB2 OVERVIEW

1) **ON/OFF** Key (Under flap)

2) Indicator LED

3) Break Off Tab

4) Antenna

5) Antenna Rewind Knob

6) Strobe light

7) **TEST** Key

8) NFC Antenna

9) Lanyard under rubber band

10) Serial Number/ UIN Label

11) Programming Details Label

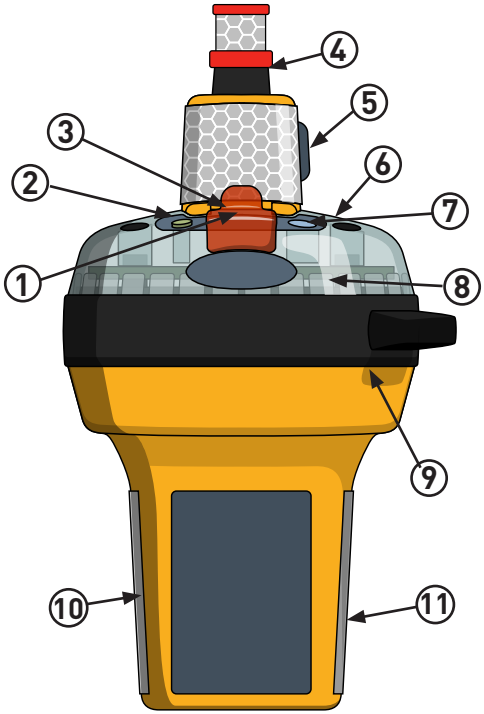

The lanyard is provided to attach the EPIRB2 to the life raft or your person, once it is activated. Do not use it to attach it to the ship, as this may result in the loss of the EPIRB2 if the vessel sinks.

It is important that the vessel details are marked on the EPIRB2. Please use a fine tip UV resistant indelible pen to clearly mark the MMSI, Vessel Name and Call Sign in the spaces provided. Cover this label with the clear protective label provided to protect the text from wear.

4. INSTALLATION

Failure to follow the following installation guidelines may cause the EPIRB2 to operate incorrectly.

Do not mount the EPIRB2 closer than 1.0 metre to any steering compass as this may affect the accuracy of the compass.

Keep the EPIRB2 away from any strong magnetic sources such as loudspeakers, compass compensation magnets, etc.

Do not install or operate in a location subject to high intensity RF fields (e.g.radar or communications antennas)

GNSS operation may be impaired if operated within 10m of GMDSS sat-com systems.

4.1 Location

The location selected must be sufficiently robust to support the weight of the entire unit. Exposure to the elements and surrounding hazards along with vibration should also be taken into consideration when choosing the location. Ensure that the mounting location allows easy access to the EPIRB2 for emergency use, maintenance and servicing.

4.2 Mounting Dimensions

Shown below is a minimum spacing suggested to allow easy hand access to release the EPIRB2 from the bracket.

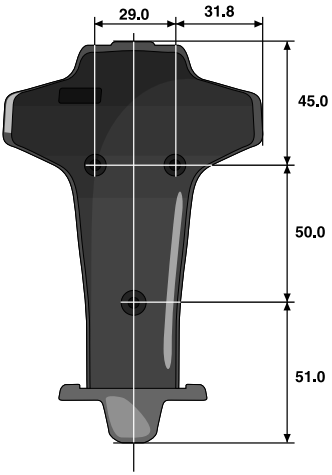

4.3 Remove the EPIRB2 from the Mounting Bracket

Prior to installation the EPIRB2 must be removed from the bracket.

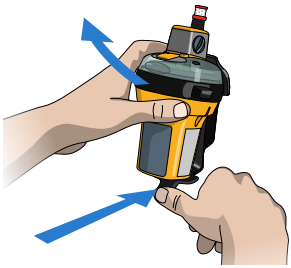

4.4 Fit the Manual Mounting Bracket

Using the dimensions shown, use the three No.6 x 3/4" Countersunk screws supplied to secure the mounting bracket to a suitable bulkhead in a position that will allow easy access in the event of abandoning the vessel.

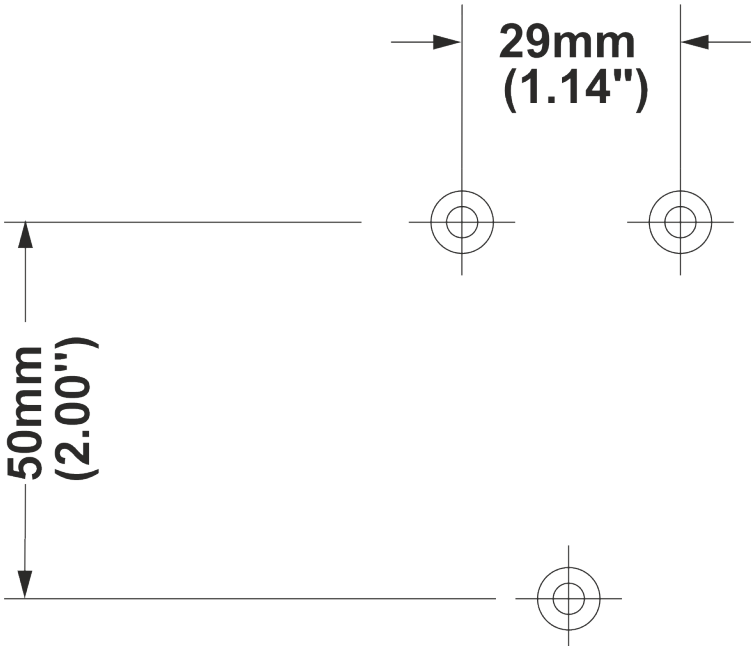

4.5 Fit the EPIRB2 into the Mounting Bracket

Following installation the EPIRB2 should be refitted to the bracket.

IN CASE OF EMERGENCY

USE ONLY IN SITUATIONS OF GRAVE AND IMMINENT DANGER

5. OPERATION

The EPIRB2 is designed for best operation while floating in water. If used in other situations ensure that the EPIRB2 is placed in the open, clear of any cover and kept upright. Do not place the EPIRB2 close to large structures or under cover.

In the event of the vessel starting to sink the EPIRB2 MUST be released from the bracket and placed in the water. It will activate on contact with the water.

In the case of abandoning ship, if possible, recover the EPIRB2 and tie to the survival craft or person using the lanyard. For optimum operation, it is recommended that the EPIRB2 be tied to the life-raft with the lanyard and floated in the sea.

The EPIRB2 is prevented from activation while mounted in the Manual Mounting Bracket. For activation the EPIRB2 MUST be removed from the bracket.

The antenna MUST be FULLY extended for optimum performance.

5.1 Manual Release

5.1.1 Remove from the Manual Mounting Bracket

5.1.2 Fully extend the antenna

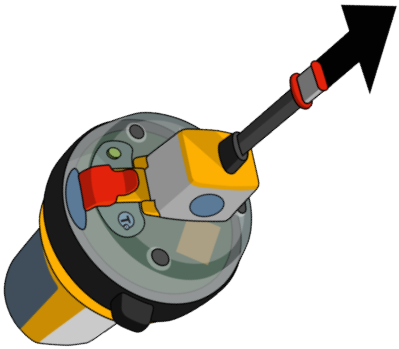

5.1.3 Break off the red protective tab

5.1.4 Lift the yellow flap up to expose the Red ON/OFF button.

5.1.5 Press and hold the red ON/OFF button for 1 to 2 seconds to activate. (Until the green LED starts to flash)

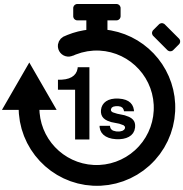

The EPIRB2 will now be operational. The strobe lights will begin to flash at a rate of once every 2.5 seconds as soon as the unit is activated.

For best performance it is important that the EPIRB2 is in an upright position with a clear view of the sky and as far away from any metallic structures as possible.

The EPIRB2 contains a GNSS receiver. Ensure that the GNSS antenna is not obstructed and has a complete, unobstructed view of the sky – as indicated on the top of the EPIRB2.

A lanyard is provided to tether the EPIRB2 to the lifeboat or life raft to ensure that it does not drift away. Make sure this is firmly attached.

5.1.6 EPIRB2 Automatic Operation

The EPIRB2 will sense when it has been placed in water and automatically begin to operate after a short delay, in the same manner as described above.

⚠ **If the EPIRB2 is mounted in the Manual Bracket this function is disabled until the EPIRB2 has been released from the bracket.**

⚠ **The antenna MUST be FULLY extended for optimum performance.**

5.2 Optical indications on activation

- The green LED will illuminate (blue if RLS is enabled) for 1 second.
- The strobe light will start flashing.
- Within 1 minute of activation, the indicator LED will flash a quick burst of 5 indicating 406MHz transmission.

5.2.1 LED Indications with RLS Enabled

LED	When	Transmit	GNSS	RLS
(x1)	Every 5 s		Searching	
(x3)	Once		Fix acquired	
(x5)	At transmit	406MHz	No Fix	Request sent
(x5)	At transmit	406MHz	Fix acquired	Request sent
(x1)	Every 2.5 s*	121MHz		Reply not received
(x1)	Every 2.5 s*	121MHz		Reply received
(x1)	Every 2.5 s			

5.2.2 LED Indications for units configured with non-RLS Protocol

LED	When	Transmit	GNSS
(x1)	Every 5 s		Searching
(x3)	Once		Fix acquired
(x5)	At transmit	406MHz	No Fix
(x5)	At transmit	406MHz	Fix acquired
(x1)	Every 2.5 s**	121MHz	
(x1)	Every 2.5 s		

* The 121MHz Homer will not transmit until after the first 406MHz transmission.

5.3 Deactivation

5.3.1 Deactivation if Manually Activated

If the EPIRB2 has been inadvertently activated or the emergency situation has passed, it can be turned off simply by pressing and holding for 1 to 2 seconds the ON/OFF key. It is not possible for the user to replace the red protective cover. Return the EPIRB2 to an Ocean Signal authorised service centre for checking and replacement.

5.3.2 Deactivation if Automatically Activated

If the EPIRB2 was automatically activated by placing in water, remove from the water and dry. The EPIRB2 will automatically switch off after approximately 30 seconds.

6. FALSE ALERTS

False alerts are a serious problem - they cause valuable resources to be diverted away from real emergency situations. If a false alert is initiated, by any means, it is important to contact the nearest search and rescue authority and inform them of the false alert.

Report the following information:

1. EPIRB2 Hex ID.
2. Date, time and duration.
3. Cause of activation.
4. Location when the alert was activated.
5. Location at time of deactivation.

If the EPIRB2 was activated by mistake then turn it off. The first emergency transmission will not occur for approximately 50 seconds. If the unit is turned off within this time then the EPIRB2 will not have sent an emergency distress alert.

The EPIRB2 is fitted with water activation contacts. Although the Manual Bracket is designed to prevent accidental activation, if the EPIRB2 is not correctly fitted in its bracket it is possible that this may cause a false alert situation.

If the unit has been dropped into the water then remove from the water and dry the case. Wait approximately 30 seconds for the water contacts to de-activate. If the unit is still flashing after this period, check that the unit has not been manually activated; if so then follow the procedure to manually switch the EPIRB2 off.

Once the EPIRB2 is switched off, it is advisable to carry out a self test before replacing the EPIRB2 into the Manual Bracket.

⚠ **Should the EPIRB2 fail to deactivate, rewind the antenna and completely wrap in several layers of aluminium foil , or place in a metal container with a tightly fitting lid.**

7. TESTING

Routine testing of your EPIRB2 is recommended to ensure it is in good working order if needed in an emergency. Monthly testing is recommended, but remember that each test will reduce the battery capacity slightly and reduce the operating time of your EPIRB2 during an emergency.

7.1 NFC and Mobile App.

The EPIRB2 is capable of connection to devices using Near Field Communication (NFC). NFC technology allows communication between two electronic devices over a distance of 4cm (1.5") or less. The benefit of using NFC in the EPIRB2 is that the power used for communication comes from the mobile device and not the beacon.

The Ocean Signal mobile App allows a user to access the EPIRB2 and see the programmed details and the latest test results giving a clear indication of the beacon's condition.

Download the App. here: Android iOS

To use the App touch your mobile device to the top of the EPIRB2 where you see "NFC".

7.2 Beacon Test

Ensure the antenna is fully deployed and above the EPIRB2 before commencing the test. Rewind the antenna before placing the EPIRB2 back in its bracket.

Because the test transmits a short burst on the aircraft distress frequency of 121.5MHz, please only carry out this test in the first five minutes of each hour.

It is recommended to test your EPIRB2 once a month.

A magenta or amber test result indicates the battery has been used for over two hours or the recommended number of tests has been exceeded. The EPIRB2 will still operate normally in distress, but the battery should be replaced to ensure the full operating life when your EPIRB2 is needed.

7.2.1 Functional Test

To test your EPIRB2 is functioning correctly, press and hold the TEST key for 1 to 2 seconds. The LED will illuminate red to indicate the key has been pressed, then start flashing. Release the TEST key now. After a short pause the strobe will flash and the indicator LED will produce a flash sequence.
The flash sequence indicates the total number of hours that the battery has already been in use, up to the time that the test was initiated.

7.2.2 LED Indications with RLS Enabled

No. of Flashes	Functional Test Pass	Fail
1	0 to 59min 1hr to 1hr 59min	121.5MHz homer
2	2hrs to 3hrs 59min	406MHz power
3	4hrs to 5hrs 59min	
4	6hrs to 7hrs 59min	
5	8hrs to 9hrs 59min	Battery failure
6	10hrs +	No GNSS

7.2.3 LED Indications for units configured with non-RLS Protocol

No. of Flashes	Functional Test Pass	Fail
1	0 to 59min 1hr to 1hr 59min	121.5MHz homer
2	2hrs to 3hrs 59min	406MHz power
3	4hrs to 5hrs 59min	
4	6hrs to 7hrs 59min	
5	8hrs to 9hrs 59min	Battery failure
6	10hrs +	No GNSS

The battery must be replaced either prior to the expiry date shown on the rear label or after the EPIRB2 has been activated.

If, during a self test, the LED flashes magenta or amber the EPIRB2 may not have sufficient energy to operate for the specified 48-hour period. Battery replacement is recommended.

NOTE: The flash sequence will be repeated after a short pause and then the EPIRB2 will automatically power off.

7.3 GNSS Test

This test should only be performed where the EPIRB2 has a clear and unobstructed view of the sky. This is required to allow the GNSS receiver to acquire a signal from sufficient satellites to allow it to determine a position. Ensure the area marked "GNSS Antenna" is not obstructed.

It is recommended that a GNSS test is carried out at least once every six months to ensure correct operation of the EPIRB2.

Press and hold the TEST key for 5 seconds. The LED will illuminate red to indicate the key has been pressed, then start flashing. Shortly after, the LED will cease flashing and become a steady red light. Release the TEST key now.

During the GNSS test the LED will repeat a long red flash followed by a short green flash until either a position fix is obtained or the GNSS test fails.

A successful test will be indicated by a number of green LED flashes and an unsuccessful test will be indicated by a number of red LED flashes. The number of flashes indicates the number of GNSS tests remaining (e.g. 7 flashes = 7 tests remaining).

The test result flashes will be repeated after 2 seconds.

If there are 10 or more tests remaining then the LED will flash 10 times only (repeated).

The EPIRB2 has the capacity to carry out 60 GNSS tests within the lifetime of the battery.

If there are no tests remaining immediately after the current test, the LED will flash green or red rapidly for three seconds (not repeated) depending on whether the GNSS test was successful or not, respectively.

When there are no tests remaining, the LED will flash red rapidly for three seconds (not repeated).

The test can be ended at any time by holding the TEST key for 1 to 2 seconds.

For further information regarding Self Test and Self Test history use the Ocean Signal App to connect to your EPIRB2 using Near Field Communication (NFC).

Android

iOS

8. BEACON REGISTRATION

⚠ **It is the owner's responsibility to register this beacon with the appropriate National Authority before operation.**

Documentation is provided within the packaging with information regarding registration with the relevant body to comply with the required configuration of the beacon.

NOTE: For all countries listed below it is preferred that registration is completed on-line using the appropriate links.

8.1 Advice to owners of EPIRBs

Registration of 406 MHz satellite EPIRBs:

- Registration with the National Authority is mandatory because of the global alerting nature of the system.
- The information provided in the registration card is used for rescue purposes only.
- See the owner registration card for the National Authority contact details on how to register your beacon upon completion of the sales transaction. Before a beacon enters service, it should be registered with the National Authority.
- If the beacon is being transferred to a new owner, the current owner needs to inform the National Authority of the name and address of the new owner.
- The subsequent owner of the beacon is required to provide the National Authority with the information as shown in the owner registration card.
- This obligation transfers to all subsequent owners.

8.2 Country Specific Registration Information

USA

NOAA-Sarsat, USMCC, NSOF, E/SPO53, 1315 East West Hwy, Silver Spring, MD, 20910
Fax: (1.301) 8174565, Tel: (1.301) 8174515 (1.888) 2127283
Email: beacon.registration@noaa.gov, Web: www.beaconregistration.noaa.gov/

CANADA

Beacon Registry, CMCC Trenton, 8 Wing Trenton, Box 1000 Stn Forces, Astra, Ontario, K0K 3W0
Fax: +1 877 406 3298, Tel: +1 800 211 8107 / +1 613 965 7265
Email: cbr@sarnet.dnd.ca, Web: www.cbr-rcb.ca

UK

Distress & Security Beacon Registry, Pendennis Point, Castle Drive, Falmouth, TR11 4WZ
Fax: +44 (0) 13 2631 9264, Tel: +44 (0) 20 3817 2006
Email: ukbeacons@mcga.gov.uk, Web: www.gov.uk/406beacon

AUSTRALIA

Australian Maritime Safety Authority, GPO Box 2181, Canberra, Australia, ACT 2601
Fax: 1800 406 329 (+61 2 9332 6323 (Int.)), Tel: 1800 406 406 (+61 2 6279 5766 (Int.)
Email: ausbeacon@amsa.gov.au, Web: www.amsa.gov.au/beacons

NEW ZEALAND

JRCC NZ, Avalon Studios, Percy Cameron Street, P.O. Box 30050, Lower Hutt, 5040
Fax: +64 4 577 8041, Tel: +64 4 577 8030 +64 4 577 8034
Email: 406registry@maritimenz.govt.nz, Web: www.beacons.org.nz

For other countries visit: www.406registration.com/countriessupported.aspx

8.3 UNREGISTERED BEACON

⚠ **It is important to register your beacon. Operation of a beacon that is unregistered or incorrectly registered could lead to delays in providing the rescue services required by the operator of that beacon.**

9. APPENDIX

9.1 Maintenance

The EPIRB2 requires little maintenance except periodic cleaning, if required. Always use a damp cloth to clean the case and dry thoroughly.

⚠ **Do not use solvents or other cleaning fluids as this may cause the plastics to deteriorate.**

⚠ **Ensure the antenna is clean and not permanently bent. Ensure free movement of the antenna winding mechanism.**

⚠ **Should the EPIRB2 turn on during cleaning, make sure it is turned off as quickly as possible by pressing and holding the ON/OFF Key until the LED flashes red twice and release.**

9.1.1 Every Month

During the EPIRB2 self test it is advised that the following inspection is performed.

- Inspect the EPIRB2 for obvious signs of damage including the state of the antenna. Any creases in the antenna may cause operation of the EPIRB2 to be impaired.
- Confirm that the EPIRB2 is securely mounted on the bracket.
- Inspect the lanyard to ensure it is not attached to any structures.
- Confirm the battery is within the specified expiry date.
- Clean the EPIRB2 and mounting. It is recommended that the EPIRB is cleaned only using a damp cloth..

9.1.2 Every 12 Months

- Annual Test and Inspection:
  Perform extended annual test according to IMO's MSC/Circ.1040 of 406 MHz satellite EPIRBs as required by SOLAS IV/15.9 (If required by SOLAS or national regulation)

- Perform a GNSS Test (see section 7.2)

9.1.3 Shore Based Maintenance (SBM)

- If the EPIRB2 is fitted on a vessel which requires GMDSS compliant equipment, the EPIRB2 shall be serviced, tested and approved as required by SOLAS regulation IV/15.9.2 of SOLAS 1974 as amended with, in accordance with MSC/Circ.1039 guidelines for shore-based maintenance of Satellite EPIRBs within 5 years, or by the date of battery expiry, whichever comes first.

⚠ **There are no user serviceable parts inside the EPIRB2.**

⚠ **DO NOT OPEN THE EPIRB2, DOING SO WILL INVALIDATE THE WARRANTY AND MAY CAUSE FALSE ALERTS**

9.2 Batteries

The EPIRB2 contains Lithium iron batteries for long operating life. The battery must be replaced either prior to the expiry date or after the EPIRB2 has been used, even if only activated for a short period of time. The battery condition can be determined by carrying out the Self Test procedure shown in section 7 of this manual.

⚠ **Battery replacement must be carried out at an Ocean Signal authorised battery replacement centre using manufacturer supplied battery components.**

⚠ **DO NOT ATTEMPT TO REPLACE THE BATTERIES YOURSELF**
The EPIRB2 is a life saving device and unauthorised opening and battery replacement may cause the unit to fail upon activation putting your life at risk.

⚠ **Contains Lithium batteries:**
- store between -30°C (-22ºF) to+70°C (+158ºF)
If the EPIRB2 is stored at higher temperatures the battery life may be degraded and should be replaced earlier than the date stated. Failure to do this may result in the EPIRB2 not fulfilling the stated 48hr operating life. The effect is more pronounced as the temperature increases.

⚠ **Do not short circuit, incinerate or recharge.**

9.3 Decommissioning and Disposal

Care should be taken when disposing of your EPIRB2 when it is no longer required. It is recommended to remove the battery from the EPIRB2 by removing the top case and lifting clear the circuit board.

⚠ **The EPIRB2 is not user serviceable and opening the case will invalidate the warranty.**

⚠ **Once removed, the battery and other components of the product should be disposed of following guidelines and laws applicable within the relevant country.**

⚠ **Do not short circuit, incinerate or recharge the battery.**

⚠ **Incorrect handling and disposal of batteries may lead to leakage and explosion.**

It is the owner's responsibility to inform the National Authority under which the beacon was registered that the beacon has been decommissioned.

9.4 Transport

When shipping your EPIRB2 the following guidance and regulations should be followed, but you are advised to contact your nearest battery replacement centre or Ocean Signal prior to shipping as regulations may have changed.

- Always pack your EPIRB2 securely in a stout cardboard carton. Ocean Signal advises that you keep the original packaging in case of return for service.
- For surface transport the EPIRB2 may be shipped under Special Provision 188.
- For air transport the EPIRB2 should be shipped as category UN3091 and packed under IATA packing instruction 970 section II. If you are hand carrying your EPIRB2 on an aircraft please contact your airline for advice.

Safety Data sheets for all Ocean Signal products can be found on the Ocean Signal website:

www.oceansignal.com/safety-data-sheets/

9.5 Specifications

406MHz Transmitter

Transmit Power (EIRP)	12W
Frequency	406.031 MHz ±1KHz
Modulation	Phase ±1.1 Radians (16K0G1D)
Encoding	Biphase L
Rate	400 bps

121.5MHz Transmitter

Transmit Power (PERP)	50mW±3dB
Frequency	121.5 MHz
Modulation Duty Cycle	>35%
Modulation Factor	0.85 to1.00
Frequency Stability	±50ppm
Duty Cycle	>98%

Strobe and Night Vision Lights

Light Type	High Intensity LED & Infrared (IR)
Light Colour	White and IR
Average Intensity Visible	>1 candela
Average Intensity Night Vision Light	15mW/sr
Flash Rate	24 per minute (nom.)

Battery

Type	Lithium Iron Disulphide (LiFeS2)
Operating Time	>48Hours @ -20°C
Battery Replacement Period	10 years

GNSS Receiver

Satellite Channels	72 acquisition
Sensitivity	-167dBm
Cold Start / Re-acquisition	-148dBm / -160dBm
GNSS Antenna	Microstrip Patch

NFC Transmitter/Receiver

Operating Frequency	13.56 MHz

General

Dimensions of EPIRB (Inc. antenna)	410mm x 90mm x 101mm (16.1 x 3.5 x 3.9 in.)
Weight (EPIRB Only)	422grams (0.92lbs)
IEC60945 Category	Portable
Operating Temperature	Class 2 -20C to +55C
Storage Temperature	Class 2 -30C to +70C
Waterproof (EPIRB)	10m depth for 1 hour
Expected Life (EPIRB and Bracket)	In excess of 10 year

9.6 Approvals

In addition to Cospas Sarsat Type Acceptance, the EPIRB2 complies with the following National Approvals:

9.6.1 European Union

Hereby, Ocean Signal Ltd. declares that the radio equipment type EPIRB2 is in compliance with Radio Equipment Directive 2014/53/EU. The DoC can be found at the following website link: https://oceansignal.com/approvals-documents/

9.6.2 UK

Complies with UK Radio Equipment Regulation (UK RER):2017

9.6.3 USA

Complies with FCC 47 CFR Part 80 and US Coast Guard requirements

9.6.4 Canada

Complies with ISED RSS GEN and RSS287

9.6.5 Australia/New Zealand

Complies with AZ/NZS 4280.1

9.7 Spares

Manual Mounting Bracket	Part Number: 703S-01600

10. WARRANTY INFORMATION

10.1 Limited Warranty

Your Ocean Signal product is warranted against manufacturing defects in materials and workmanship for a period of 2 years from the date of purchase and in accordance with the following conditions.

Ocean Signal will at its discretion, repair or replace faulty product free of charge excluding the cost of shipping. Proof of purchase shall be required in order for a warranty claim to be valid from the original purchaser. All claims shall be made in writing to Ocean Signal or an approved service dealer or distributor.

Ocean Signal shall not be liable to the buyer under the above warranty:

- for any repairs or modifications carried out on the product using parts that are not supplied or approved by the manufacturer Ocean Signal including batteries and for work carried out other than by Ocean Signal or approved service dealers,
- for any part, material or accessory that is not manufactured by Ocean Signal the consumer will be covered by the guarantee / warranty offered to Ocean Signal by the manufacturer or supplier of such a component,
- for product which has not been fully paid for,
- for any product supplied by Ocean Signal to a customer under an alternative warranty or commercial agreement,
- for the cost of shipping product to and from the customer.

The Battery is only warranted until the date of expiry and provided the unit is tested in accordance with the information in the user manual as noted by the electronic witness stored within the product. The following specific item is excluded from this warranty:

- Damage to the antenna

This warranty does not affect your statutory rights.

10.2 Extended Warranty

⚠ **ENTER YOUR PRODUCT DETAILS TO GAIN THE EXTENDED WARRANTY PERIOD**

Apply for free at www.oceansignal.com/warranty

By entering your product details you can add 3 years to the warranty period.
For full details on extended warranty on this product see www.oceansignal.com/warranty.

For further assistance please contact our Technical Service Department.
Email: info@oceansignal.com

Ocean Signal Ltd.
Unit 4, Ocivan Way
Margate
CT9 4NN
United Kingdom

info@oceansignal.com
www.oceansignal.com