THE SCIENCE ACR OF SURVIVAL

Pathfinder™ AIS

AIS SEARCH AND RESCUE TRANSMITTER

USER MANUAL

Copyright © 2026 ACR Electronics, Inc.

All contents of this manual are the intellectual property of ACR Electronics, Inc.
This includes but is not limited to text, diagrams, illustrations and any other materials contained herein. No part of this manual may be altered and further produced in any form, electronic or mechanical, without the prior written permission of ACR Electronics, Inc.

For permission requests or inquiries, please contact support@acrartex.com

ACR Electronics, Inc. reserves the right to change or update the contents of this manual without prior notice. While every effort has been made to ensure the accuracy of the information provided, ACR Electronics, Inc. assumes no responsibility for errors or omissions.

Pathfinder™ is a registered trademark of ACR Electronics, Inc.

IN CASE OF EMERGENCY

Use only in situations of grave and imminent danger

1 Press release latch and remove from bracket.

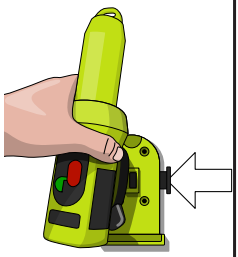

2 Break off clear protective cover over the green and red switches.

3 Holding the green switch to the left, push the red switch down and hold.

NOTE: this will activate SART

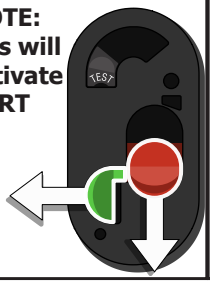

4 Whilst holding the red switch down, release the green switch to lock in active position.

5 Attach the SART to the roof of the life raft, or mount on the optional telescopic pole, if fitted, and attach to the side of the life raft.

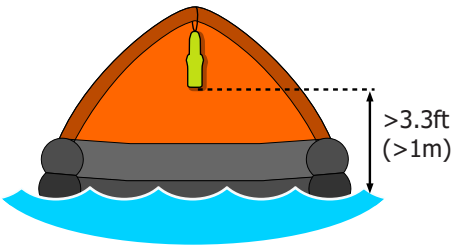

OR

The Pathfinder AIS SART should be mounted at least 3.3ft (1m) above sea level for maximum effectiveness during activation.

The Pathfinder AIS SART should be tethered to the life raft using the lanyard to avoid being lost overboard.

NOTE: Refer to section 5.2 and 5.3 for full deployment instructions.

NOTE: Refer to section 5.6 for deactivation instructions.

CONTENTS

1.	**GENERAL**	**5**
1.1	Exposure to RF Electromagnetic Energy	5
1.2	Warnings	5
1.3	Pathfinder AIS Contents	5
2.	**INTRODUCTION**	**6**
2.1	AIS System	6
2.2	Near Field Communication (NFC)	6
3.	**PATHFINDER AIS SART OVERVIEW**	**7**
3.1	Antenna Information	7
4.	**INSTALLATION**	**8**
4.1	Bracket Installation	8
4.2	Battery Installation	9
5.	**Operation**	**9**
5.1	Activation	9
5.2	Standard Deployment	10
5.3	Deployment using optional pole	10
5.4	Optical indications on activation	11
5.5	End of Life	11
5.6	Deactivation	12
6.	**TESTING**	**12**
6.1	Function Test	12
6.2	Functional Test LED Indicator	13
7.	**BATTERIES**	**13**
7.1	Battery Replacement	14
8.	**APPENDIX**	**15**
8.1	Maintenance and Troubleshooting	15
8.2	Battery Safety Information	15
8.3	Handling and Storage	15
8.4	Transportation	16
8.5	Accessories	16
8.6	Specifications	17
8.7	Limited Warranty	18
8.8	Approvals	19

1. GENERAL

1.1 Exposure to RF Electromagnetic Energy

This product has been evaluated for compliance with the FCC RF exposure limits given in CFR 47 part 2.1093: Portable Devices.

This equipment complies with the RF exposure limits established by ISED for an uncontrolled environment. The device has been evaluated at 0 mm separation distance and found to meet the Specific Absorption Rate (SAR) requirements of RSS-102.
No minimum separation distance is required during use.

1.2 Warnings

⚠ **The Pathfinder AIS SART is designed for use in emergency only. Only operate it in situations of grave and imminent danger.**

⚠ **The Pathfinder AIS SART incorporates a protective tab over the operating controls to avoid accidental activation and indicate that the unit has been used.**

⚠ **After any period of operation, the battery should be replaced and the unit returned to your local service dealer for replacement of the protective tab.**

⚠ **Always replace the battery before the expiry date is exceeded to ensure full operating capacity in case of emergency.**

⚠ **Please ensure you follow local regulations before disposing of this item. Ensure the battery is removed from the unit before disposal.**

⚠ **Changes or modifications not expressly approved by the manufacturer may void the user's authority to operate this equipment.**

1.3 Pathfinder AIS Contents

1	4x Screws (for bracket)
2	Pathfinder AIS SART
3	Quick Start Guide
4	Hex Key (for battery)
5	2920 Battery Module
6	Mounting Bracket

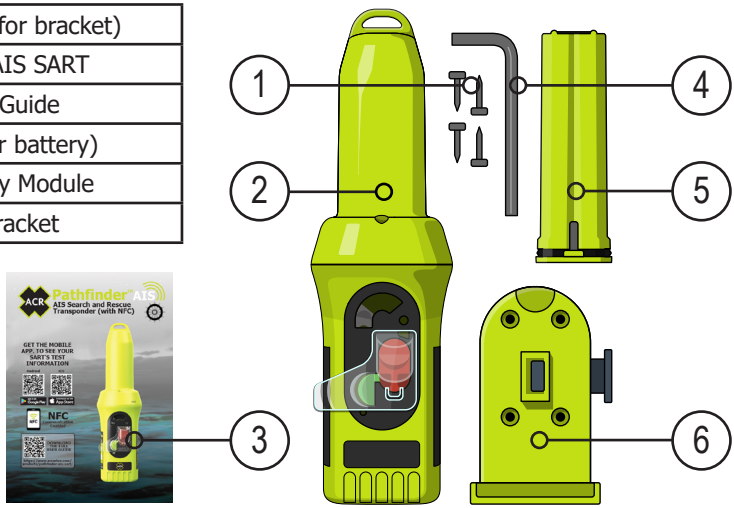

2. INTRODUCTION

2.1 AIS System

The AIS system operates on the VHF radio band. Transceivers are fitted to all commercial ships and an ever-growing number of recreational vessels globally. Shortly after activation an AIS location device will activate a SART target and SART ACTIVE message on plotters on all AIS equipped vessels within the VHF range, alerting them that emergency assistance is required. Often it is a vessel in the close vicinity of an incident that is able to react and effect a rescue quicker than the emergency services. Emergency service craft are fitted with AIS receivers allowing them to pinpoint emergencies in the water more precisely than any other system.

The method in which an AIS message is displayed will depend on the reception equipment being used. AIS enabled plotters will display a ship or SART target with the SART preprogrammed AIS unique ID, that identifies it as an AIS SART device.

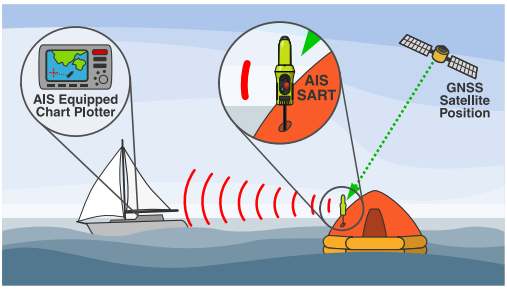

Interface diagram showing typical usage

2.2 Near Field Communication (NFC)

The Pathfinder AIS AIS SART is capable of connection to devices using Near Field Communication (NFC). NFC technology allows communication between two electronic devices over a distance of a few centimetres.

The benefit of using NFC in the Pathfinder AIS SART is that the power used for communication comes from the mobile device and not the SART. The ACR Electronics, Inc. mobile app allows a user to access the Pathfinder AIS SART for viewing the latest test results and battery health.

Download the app here: Android iOS

To use the app simply align your mobile device NFC antenna to the front of the Pathfinder AIS SART where you see “NFC”. Once connected, details about your Pathfinder AIS SART will be displayed on your mobile device, including the product name and serial number, the unique ID and any previous test results that have been stored.

The battery information is also available through the app, including the current battery expiry date and how long the battery has been in use so far

3. PATHFINDER AIS SART OVERVIEW

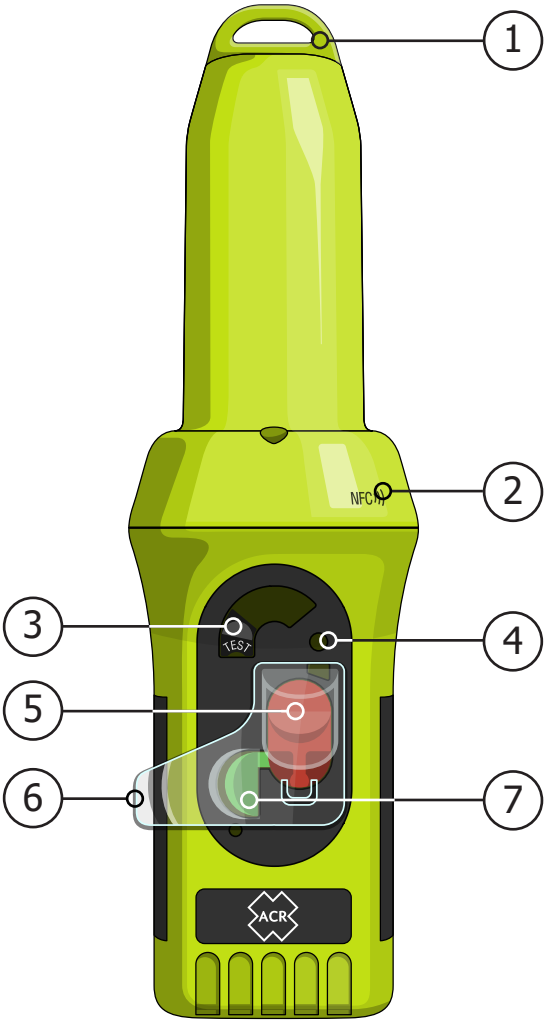

1. Lanyard Attachment Point
2. NFC Antenna (Internal)
3. Test Switch
4. Indicator LED
5. Activation Switch
6. Clear Protective Cover
7. Interlock Switch
8. Pole Attachment Point
9. Battery Module with Expiry

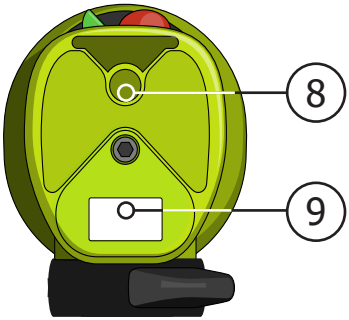

3.1 Antenna Information

This device contains an integral, non-removable antenna. The antenna must not be modified, replaced, or used with any external antenna system.

Any modification to the antenna or radio section may void the user's authority to operate this equipment.

4. INSTALLATION

4.1 Bracket Installation

The Pathfinder AIS SART is supplied with a quick release mounting bracket. This bracket should be mounted on a suitable wall or bulkhead in a position where it can easily be retrieved in an emergency.

Although the Pathfinder AIS SART is rugged and waterproof, ACR Electronics recommends mounting the SART in a protected position whenever possible.

Do not mount the Pathfinder AIS SART closer than 1 meter to any steering compass as this may affect the accuracy of the compass.

Keep the Pathfinder AIS SART away from any strong magnetic sources such as loudspeakers, compass compensation magnets, etc.

Mark the location of the four screw holes onto the mounting position. Pre-drill the holes if required then screw the mounting bracket to the surface using the four No6 x 5/8” screws supplied.

The Pathfinder AIS SART simply clips onto the mounting bracket.

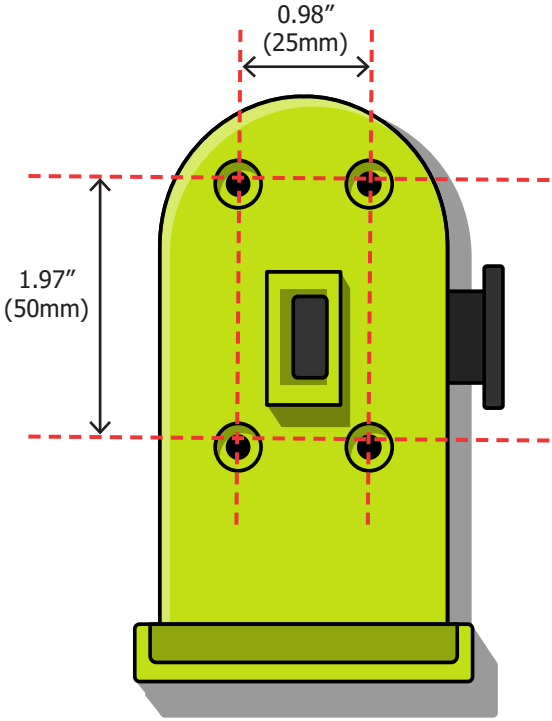

4.2 Battery Installation

The battery module is retained by a single hex head screw using the 3mm hex key provided.

Insert the battery module into the bottom of the Pathfinder AIS SART, ensuring that the rubber seal is correctly in position.

Tighten the screw until the battery is fully home within the SART body, torque not exceeding 0.5Nm.

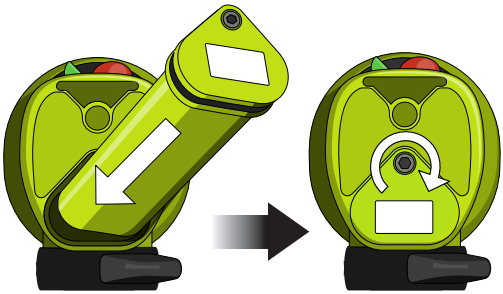

5. OPERATION

Ensure the Pathfinder AIS SART is always fitted with an unused battery that is within the marked expiry date. Check the battery information by using the NFC and the ACR Electronics app (see section 2.2).

⚠ **A SART is not intended as a primary distress alerting device. At least one of the following should also be carried on-board your vessel to alert the authorities to your situation: an EPIRB; a DSC radio; an Inmarsat satellite terminal.**

Once the Pathfinder AIS SART is activated it will help guide the Search and Rescue authorities to your position.

5.1 Activation

⚠ **The Pathfinder AIS SART should only be activated if there is grave and imminent danger to the vessel and its crew.**

To activate the Pathfinder AIS SART, remove the unit from its mounting bracket.

Break off the clear protective cover over the green and red switches.

Holding the green switch to the left, push the red switch down and hold.

While holding the red switch down, release the green switch to lock the red switch in the active position.

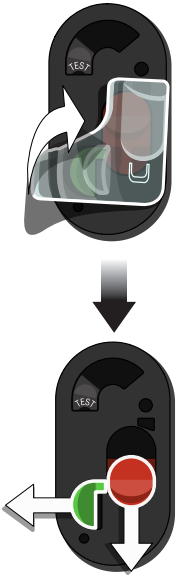

NOTE: See section 5.4 for optical indication on activation

5.2 Standard Deployment

The lanyard should be unwound and tied securely to the life raft to ensure the Pathfinder AIS SART is not lost overboard.

Once the Pathfinder AIS SART is activated it will help guide the Search and Rescue authorities to your position. For the best performance, it is important that the Pathfinder AIS SART is mounted as high as possible in the life raft.

Remove the rubber lanyard cover from the back of the Pathfinder AIS SART to reveal the lanyard stowed underneath. Use this lanyard to attach the Pathfinder AIS SART directly to the liferaft canopy or around the inflatable tube supporting the canopy

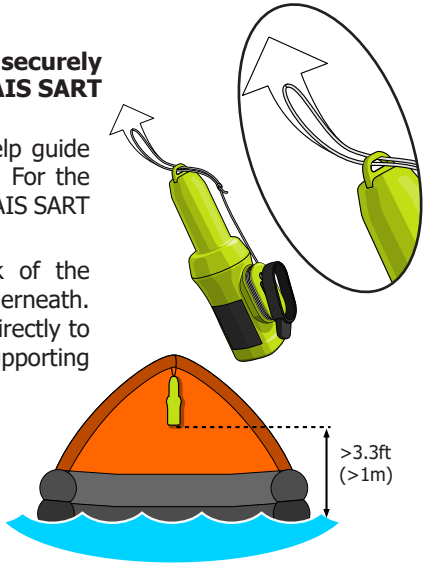

NOTE: Thread the lanyard through the attachment point at the top of the Pathfinder AIS SART. This will allow the SART to remain in an upright position when attached to the canopy from above.

5.3 Deployment using optional pole

The Pathfinder AIS SART can also be fitted with an optional telescopic pole which will keep the unit at a height of 3.3ft (1 meter) above sea level.

Remove the cap from the top of the pole and then pull out the sections until fully extended. Ensure the sections are locked tight by pulling on them.

Do not remove the rubber pole retainer from the bottom of the pole.

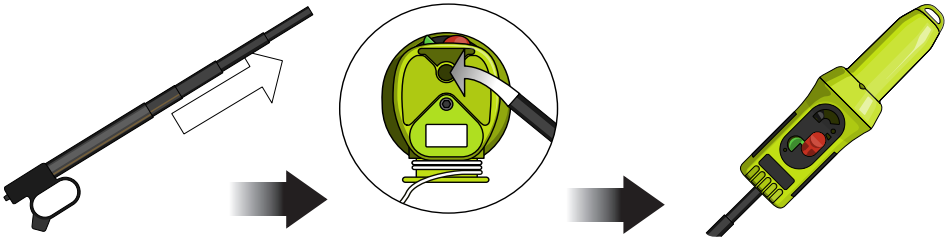

Fit the smallest section of the pole into the pole attachment point in the base of the Pathfinder AIS SART as shown, ensuring it is pushed in tightly.

The lanyard should be unwound at this stage and tied securely to the life raft to ensure the Pathfinder AIS SART is not lost overboard.

Raise the Pathfinder AIS SART vertically and attach the pole to the life raft. Most life rafts are fitted with suitable attachments to accommodate the SART pole.

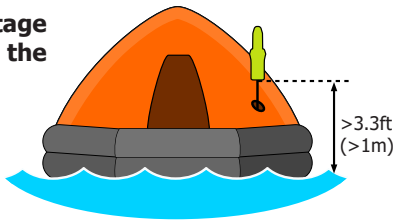

5.4 Optical indications on activation

- The green LED will illuminate for 1 second.
- During activation, the green LED will flash once every 5 seconds.
- Once a GNSS fix is acquired, the green LED will flash 3 times.

  NOTE: this will happen one time, after which the green LED will again begin to flash once every 5 seconds to indicate the unit is active.

- After approximately 50 seconds of activation, the green or red indicator LED will flash indicating AIS transmission.

LED	COLOR	WHEN	GNSS
(1x) single flash	Green	On activation	
(1x) single flash	Green	Every 5 seconds continuously whilst active	
(3x) single flash	Green	Once	Fix acquired
(8x) double flash	Red	At AIS transmission	No fix
(8x) double flash	Green	At AIS transmission	Fix acquired

5.5 End of Life

Once the Pathfinder AIS SART is activated, it will continue to transmit as above until it is either manually deactivated, or the battery reaches its end of life.

At its end of life, the Pathfinder AIS SART battery power will become too low to continue transmitting and the red LED will begin to flash rapidly (4x flash/second). This rapid flash will continue until either the battery is completely depleted, or the Pathfinder AIS SART is manually deactivated (see section 5.6 for deactivation instruction).

After the end of life, the battery must be replaced in order for the Pathfinder AIS SART to become operational again. (see section 7.1 for battery replacement instruction).

5.6 Deactivation

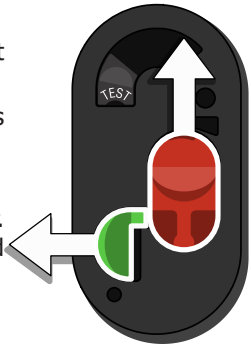

If the Pathfinder AIS SART has been inadvertently activated, it can be turned off simply by reversing the activation process.

Holding the green switch to the left, push the red switch upwards to return to the off position.

Release the green switch.

It is not possible for the user to replace the clear protective cover. Return the Pathfinder AIS SART to an ACR Electronics authorised service centre for replacement.

6. TESTING

6.1 Function Test

When performing this test, the Pathfinder AIS SART should be situated in an upright position with a clear and unobstructed view of the sky. This is required to allow the GNSS receiever to acquire a signal from a sufficient number of satelliites to determine a position.

This test should be carried out once per year.

Activate the Test Mode by rotating the grey test switch clockwise and holding until the red LED begins to flash. Release the test switch.

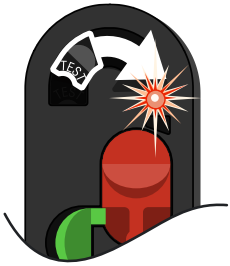

During the test, the blue LED will flash once every five seconds whilst obtaining a GNSS fix. Once a fix is acquired the green LED will flash three times. The 3x green LED flash will then be repeated after a short pause. The Pathfinder AIS SART will then automatically shut down, indicated by the red LED flashing two times.

If during this function test, the LED flashes amber three times, instead of green, it indicates that the battery has been significantly depleted and may not have sufficient energy to operate for the specified 96 hours if activated in an emergency. Immediate battery replacement is recommended.

The overall duration of the test will depend on the time taken for the SART to acquire a GNSS fix. The Pathfinder AIS SART will shut down automatically once a fix is obtained and a burst of eight messages have been transmitted. If within approximately six minutes a GNSS fix cannot be acquired, the test will fail and the red LED flash three times.

The 3x red LED flash will then be repeated after a short pause. The Pathfinder AIS SART will then automatically shut down, indicated by the red LED flashing two times.

A single burst of 8x AIS transmissions will occur during a successful Functional Test indicating "SART TEST" on AIS receivers within range.

6.2 Functional Test LED Indicator

LED	COLOR	WHEN	INDICATION
(1x) single flash	Blue	Every 5 seconds	Searching for GNSS fix
(3x) single flash repeated	Green	Once at end of GNSS search repeated after short pause	GNSS Fix acquired. Test successful
(3x) single flash repeated	Amber	Once at end of GNSS search repeated after short pause	GNSS Fix acquired. Test successful. Battery change required.
(3x) single flash repeated	Red	Once at end of GNSS search repeated after short pause	Test failure*
(2x) single flash	Red	Once at end of test	Test over & SART shutdown

*In the event of a failure, test result details can be viewed using the ACR app. Contact ACR Electronics, Inc. for advice at support@acrartex.com.

7. BATTERIES

The Pathfinder AIS SART uses a Lithium Iron Disulfide battery module to power the device. These batteries have a five year storage life before any significant reduction in capacity. Each battery is marked with an expiry date, which is located at the base of the unit.

The battery should be replaced before the expiry date has passed to ensure reliable operation and full capacity in emergency situations.

Always use batteries manufactured by ACR Electronics. Failure to do so will invalidate the type approval and may mean the unit does not operate correctly in a distress situation.

Never dispose of batteries in a fire.

Never puncture or attempt to dismantle the battery.

Never attempt to charge the battery.

Extreme temperature caused by failure to observe the above warnings may cause the battery to explode or catch fire, which may result in injury or damage to surrounding personnel or property.

Dispose of used batteries in a responsible manner. National or local regulations on battery disposal may apply, including restricting the disposal of batteries in domestic refuse.

For the Product Safety Data Sheet and advice on battery transportation, this can be viewed or downloaded directly from the product page on the ACR Electronics website at: https://www.acrartex.com/products/pathfinder-ais/

7.1 Battery Replacement

The battery may be changed by the user, although commercial vessels may be subject to local regulations relating to Shore Based Maintenance that prevent this.

Remove the Pathfinder AIS SART from its mounting bracket and turn it over.

The battery pack is retained by a single hex head screw.

Undo the screw using the 3mm hex key provided.

Remove the pack from the main body.

Insert new battery pack, ensuring that the rubber seal is correctly in position.

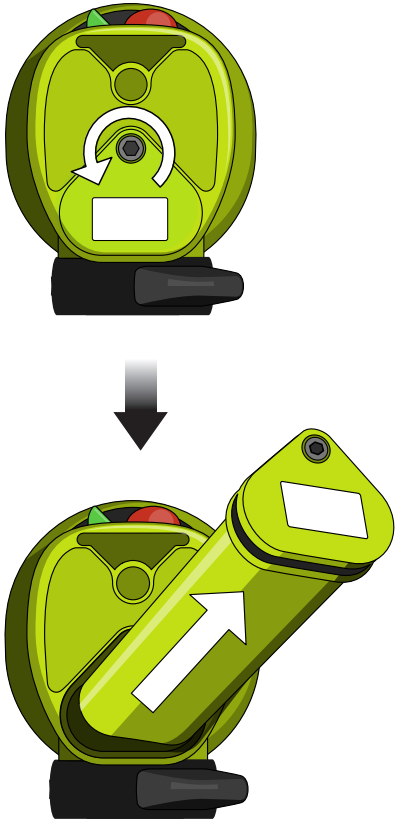

Tighten the screw until the battery is fully home within the SART body, torque not exceeding 0.5Nm.

Ensure that any maintenance records on-board are updated with the new battery expiry date.

Follow instructions provided with the replacement battery in order to update the Pathfinder AIS SART with new battery and counter information.

8. APPENDIX

8.1 Maintenance and Troubleshooting

The Pathfinder AIS SART should not need servicing during its lifetime, with the exception of changing the battery before the marked expiry date.

Regular cleaning, inspection and testing are advised - clean any grime or salt residue off the unit with a weak solution of detergent in warm water. Never use solvents as this may affect the structural integrity of the plastics used. Rinse well with fresh water after cleaning.

Inspect the unit for signs of case damage or cracks, check the labels are intact and the battery is within the expiry date. Make sure the telescopic pole (if provided) is still present and is free to extend.

Check for correct SART operation using the Test Mode (section 6). If the unit appears to fail testing, contact a service representative at ACR Electronics.

8.2 Battery Safety Information

Battery pack name: 2920 Pathfinder SART Battery
Volts: 3.0V nominal
Approximate weight: 89 grams
Chemical system: $LiFeS_2$
Lithium weight/cell: 0.98g
Total lithium weight/battery: 1.96g
Designated for recharge: No

For information regarding the physical and chemical properties, the potential health and safety measures and the environmental effects of the battery used with this product, refer to the manufacturers safety information documentation.

The safety information datasheets for all products are available for download at:
https://acrartex.com/

8.3 Handling and Storage

This product should be stored in a cool and well-ventilated area. elevated temperatures can result in a reduction of battery life.

Avoid accidentally short-circuiting batteries. Prolonged short-circuiting can cause the battery temperature to rise and significantly reduce battery life.

8.4 Transportation

The 2920 Pathfinder SART battery module has been tested in accordance with subsection 38.3 of part III of the UN Manual of Tests and Criteria. Summary test reports are available from ACR Electronics on request.

This battery module should be transported by air in accordance with the IATA dangerous goods regulations: class 9, UN3090, proper name "Lithium metal batteries" and packed according to packing instruction 968 section IB.

When supplied with equipment it is class 9, UN3091, proper name "Lithium metal batteries packed with equipment" and should be packed in accordance with packing instruction 969 section II.

8.5 Accessories

Pathfinder SART Replacement Battery.....Part Number: 2920
Pathfinder SART Optional Mounting Pole .....Part Number: 2918

8.6 Specifications

AIS Transmission

Frequency 161.975/162.025MHz
Transmit Power (EIRP)..... 1Watt ±3dBm
Baud Rate..... 9600baud
Synchronization..... UTC
Messages..... Message 1 (Position), Message 14 (Status)
Repetition Interval..... 8 Messages/Minute
..... Message 14 sent twice every 4 minutes

GNSS Receiver

Satellite Channels..... 72 Acquisition
Sensitivity ..... -167 dBm
Cold Start Re-acquisition..... -148 dBm
GNSS Antenna ..... Microstrip Patch

Battery

Type ..... Lithium Iron Disulfide ($LiFeS_2$)
Operating life ..... 96 hours at -20°C
Lithium Metal Weight (for air transport) ..... <2g per battery
Replacement interval ..... 5 years

NFC

Frequency ..... 13.56 MHz

Test Standards

Standards..... IEC61097-14, IEC60945

Environmental

Temperature Range (operating) ..... -20°C to +55°C
Temperature Range (storage)..... -30°C to +70C
Waterproof ..... 10 meters
Drop proof (on water) ..... 20 meters
Compass safe distance ..... 1 meter

General

Equipment Class..... Portable
Weight(with battery) 315g
Weight(without battery) 227g
Height 227mm
Body Diameter (max) 65mm (82mm)

8.7 Limited Warranty

The limited warranties in the global limited warranty are exclusive and in lieu of all other warranties express or implied or statutory, including any liability arising under any warranty of merchantability or fitness for a particular purpose, statutory or otherwise. This warranty gives the owner specific legal rights, which may vary from jurisdiction to jurisdiction.

In no event shall ACR Electronics, Inc. or its affiliates be liable for any incidental, special, indirect or consequential damages, whether resulting from the use, misuse, inability to use, improper reliance on, or from any defects in the product. Some jurisdictions do not allow the exclusion on incidental or consequential damages, so the above limitation may not apply to you.

The Global Limited Warranty does not affect a customer's rights against a retailer arising from a sales/purchase contract.

Product repaired or replaced under warranty will be warranted only for the remaining balance of the applicable original warranty period.

Subject to the terms, conditions, limitations and exclusions in the Global Limited Warranty, all ACR Electronics, Inc. Products are warranted to be free from defects in material or workmanship for a period of two (2) years from the date the Product was purchased by the Original Customer (the "Standard Limited Warranty Period"). During this period and for the Original Customer only, ACR Electronics, Inc. will, at its sole discretion, repair or replace any components that fail in normal use, which, in the absence of any applicable law to the contrary, shall be the customer's sole and exclusive remedy for any breach of warranty.

If the Standard Limited Warranty applies to you, ACR Electronics, Inc. will not charge you for parts or labour for warranty repairs or replacements. However, the cost of transporting your warranted Product to ACR Electronics, Inc. for repair or replacement is your responsibility and is not covered by ACR Electronics, Inc.

For the full warranty policy, see https://acrartex.com/warranty-policy/

8.8 Approvals

Any unauthorised modification to this equipment will invalidate any approvals listed either in this manual or on the ACR Electronics website, www.acrartex.com.

8.8.1 EU

Hereby, ACR Electronics Inc., declares that the PathfinderTM AIS SART search and rescue locating device, is in compliance with EU Marine Equipment Directive, under MED/4.55 of the current implementing regulation. The full text of the EU Declaration of Conformity is available at the following internet address:

https://www.acrartex.com/products/pathfinder-ais/

8.8.2 United Kingdom

The Pathfinder AIS SART is approved under the UK Marine Equipment Regulations, MSN 1874 as amended.

8.8.3 Canada

ISED Certification Number: IC: 9296A-S200

This device complies with the applicable Innovation, Science and Economic Development Canada (ISED) Radio Standards Specifications, including RSS-182 and RSS-GEN for licensed maritime radio equipment.

8.8.4 US

The Pathfinder AIS SART is approved under FCC Rule 80.233 with FCC Identifier XYES200.

5757 Ravenswood Road
Fort Lauderdale, Florida 33312
United States of America

support@acrartex.com
www.ACRARTEX.com