Introduction

DUAL 2.4G RADIO SYSTEM

The TWIN X14 stands out as a robust radio system, boasting the capability of utilizing dual 2.4G frequencies simultaneously on the same receiver in TW mode. Different from standard active-standby redundancy solutions, the TW active-active protocol ensures both 2.4G frequency bands are actively engaged on the TWIN series RF module and receiver simultaneously.

Equipped with two internal 2.4G RF antennas, the TWIN X14 offers expansive multi-directional coverage for transmitting signals. Leveraging these attributes alongside the exterior antenna mounting frame, the Twin system provides less latency, higher reliability, and faster data rates with confidence. In addition to the TW mode, TWIN X14 also supports ACCST D16 and ACCESS modes, this means users can benefit from a wide range of compatible receiver options to choose from and bind to when building the RC model.

ERGONOMIC, COMPACT & FLEXIBLE DESIGN

In alignment with the form factor concept of TANDEM X18, the TWIN X14 has been crafted to enhance its portability, reduce weight, and streamline its design. The ergonomic layout ensures that the momentary buttons, shoulder sliders, and switches on the top are effortlessly accessible.

The TWIN X14 offers 4 customizable buttons, thoughtfully placed at the radio panel center for real-time and frequent operations. Take, for instance, when flying an RC glider, to configure these buttons as additional Trim functions by ETHOS, these buttons become invaluable for on-the-fly adjustments then, allowing pilots to adapt the angle of the flaps/surface according to the real-time air environment.

BUILT-IN FLASH STORAGE AND RECHARGING SYSTEM | STAND HOLDER ATTACHABLE STRUCTURE DESIGN

Eliminating the need for users to fret over storage decisions, the TWIN X14 boasts built-in 128MB flash storage, providing ample space for your file storage requirements. Its practicality extends to a battery bay accommodating a 2600mAh Li Battery, easily replaceable and featuring a Type-C port for recharging.

Further enhancing its user-friendly design, the TWIN X14 introduces an attachable and foldable structure on the rear shell. This design allows for the easy installation of an additional stand holder accessory, transforming the X14 not only can be conveniently carried but it can also to be positioned anywhere, offering operational flexibility without having to hold the radio in your hands.

Overview

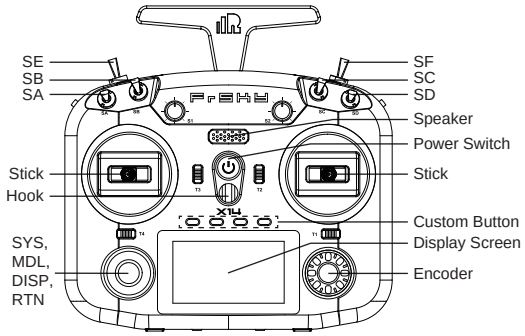

- SA: 3 positions; Short Lever
- SB: 3 positions; Long Lever
- SC: 3 positions; Long Lever
- SD: 3 positions; Short Lever
- SE: Momentary, Short Lever
- SF: 2 positions; Short Lever
- T1-T4: Stick Trims

You can choose the Switch and define its position in the HARDWARE menu.

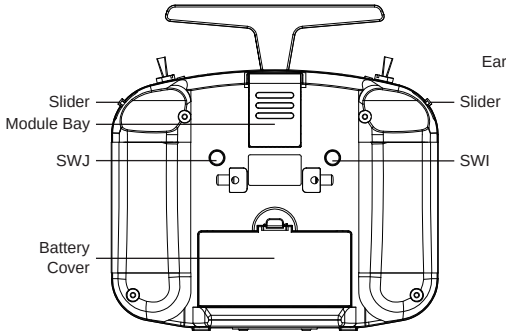

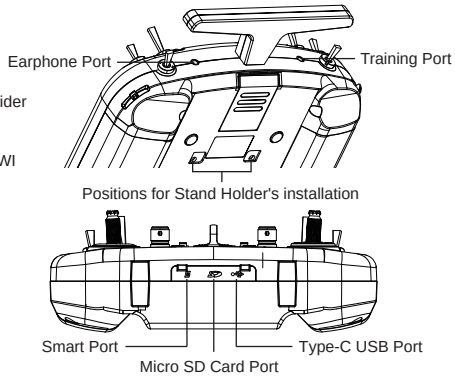

1. **USB port is for upgrading, reading / writing Micro SD cards and internal memory of radio contents and charging. (Micro SD card is not provided with shipment.)**
2. **Smart Port is for firmware upgrade for all FrSky S.Port capable devices.**

Specifications

- Dimension: 192×193×72mm (L×W×H)
- Weight: 610g (Battery Excl.)
- Operating System: ETHOS
- Internal RF Module: TW-ISRM
- 2.95" Color TFT Display Screen Resolution: 640×360
- Number of Channels: Up to 24 Channels
- Operating Voltage Range: 6.5V ~ 8.4V (2S Li-Battery)
- Operating Current: 330mA@7.4V
- Operating Temperature: -10℃ ~ 60℃ (14℉~140℉)
- Built-in 128MB Flash Storage
- Battery Bay Size: 69.5×38.5×20mm (L×W×H)
- Data Transmission & Charging Interface: USB Type-C
- USB Adaptor Voltage and Current: 5V+0.2V, ≥2.0A
- Compatibility: ACCST D16 / ACCESS / TW modes

Features

- Ergonomic and Compact Lightweight Design with Comfortable Rounded Hand Grips
- Easy-to-reach Top Switches and Sliders
- 2.95" 640×360 Resolution Color TFT Display Screen
- 4 Trims & 4 Quick-Mode Custom Buttons (Front) & 2 Momentary Buttons (Rear)
- Integrate Flash Storage but keep the TF Card Slot for Storage Extension
- High-Precision Hall-Sensor Gimbals with a Metal Panel
- Lite Type External Module Bay
- Haptic Vibration Alerts and Voice Speech Outputs
- Supports Recharge System for 2S Li Battery (USB Type-C Interface)
- High-Speed PARA Wireless Training System
- ETHOS Operating System
- CNC Aluminum Backshell Stand Holder (Optional)
- **Dual 2.4G Band TW-ISRM Internal RF Module**
  Supports multiple RF protocols: ACCST D16 / ACCESS / TW modes
  TW Mode
  – Highly resilient RF module providing dual 2.4G signals working simultaneously
  – Long-range control (Tens of kilometers, range varies based on the RF Power settings.)
  – Low-latency (＜4ms) supporting full telemetry
- Less Latency Capability with More Range and Higher Reliability at a Faster Data Rate

2S Li-battery balance charging via USB-C

The Green LED indicator states:
Led on: in charging / Led off: end of charge / Flash: charge fault
Battery compartment size: 69.5*38.5*20mm (L*W*H)

Note: 1. Charge the battery with the USB adapter (Voltage: 5V+0.2V Current: ≥2.0A) when you use the USB charging function.
2. The lower the initial charging voltage, the better the charging effect is when the voltage difference cells exceed 50 mV between the two.

Navigation Controls

The left navigation control does RTN, SYS, MDL, DISP, and Page UP/Down. The right navigation control does scroll and enter.

Page Down	Short Click
Page Up	Long Press

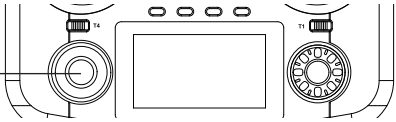

ETHOS Suite

With ETHOS Suite,you can update the radio bootloader, firmware, SD card, flash, and also convert image format and audio format. Find the latest infomation and download the ETHOS Suite at ethos.frsky-rc.com/.

Note: To use the ETHOS Suite with a FrSky ETHOS radio, please always keep the radio bootloader with the latest version.

ETHOS Operating System

Create the model

STEP 1:

Enter into Model Select, then select the model type.

Create a new model.

STEP 2:

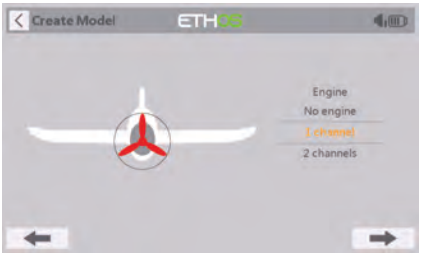

Configure the model channel.

Name the model and set the model picture.

Model Setup Procedure - Internal Module

STEP1: Enable RF Module

Enter the RF system menu by the touch-screen or use the navigation encoder key.

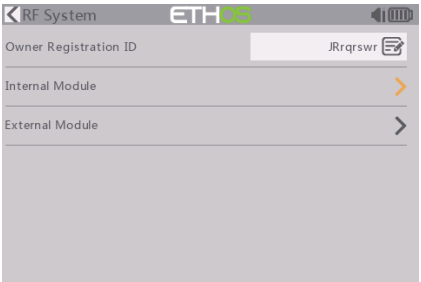

Choose the Internal Module.

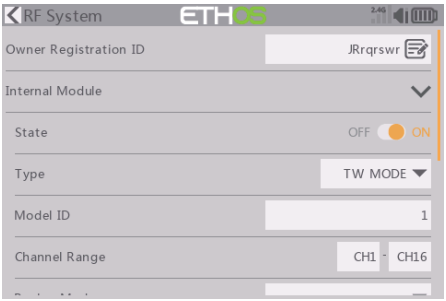

Then turn the state of Internal RF to On. Set the binding mode for the Internal RF module corresponding to the receiver (ACCST D16, ACCESS, TW MODE.etc).

STEP2: Channel Range Setting

The Internal RF module supports 24 channels (CH1-8 / CH1-16 / CH1-24).

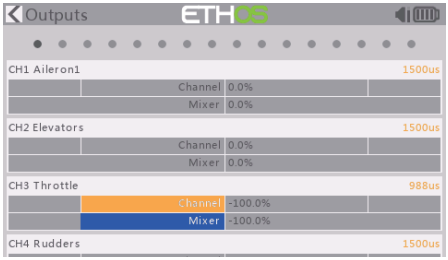

The channel range is configurable by pressing the channel bars, please also make sure of the channel configuration before using the module.

STEP3: Model ID Setting

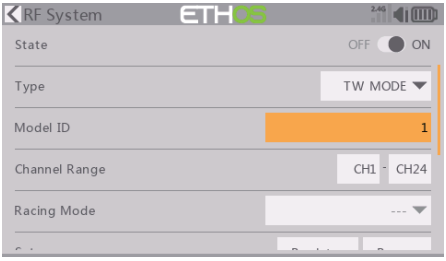

The system assigns the receiver a number for the receiver (Model ID) automatically while creating a new model. (The Model ID can be set from 00 to 63, with the default ID being 1.)

STEP4: Registration

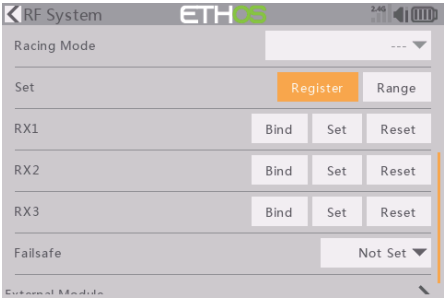

For TW Mode as an example, select the Set [Register] for getting the radio into Registration status in the RF System-Internal Module tool, then press the F/S button on the receiver and power the receiver on.

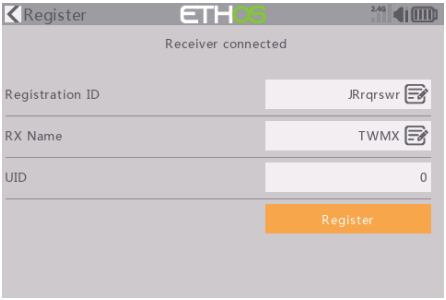

When the "RX Connected" page pops up, press the [REGISTER] to complete the Registration procedure and then power the receiver off.
(The system automatically assigns the receiver a UID differently in the same model when you have several receivers to bind at the same time.)

STEP5: Automatic Binding (Smart Match)

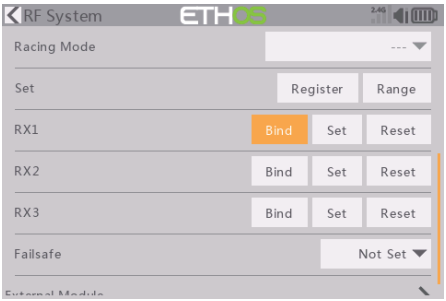

Move the cursor to RX1 [BIND], press it and repower the receiver.

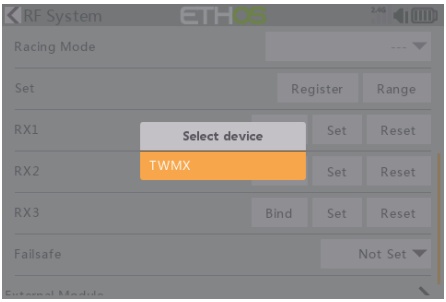

Click the RX to complete the binding after the receiver window pops up, the system will confirm "Bind succeed".

Reset: Registration procedure is not required to repeat anymore after the receiver was once registered even though the receiver is deleted. Pressing the [Reset] and repower the receiver can have the bound recovered.

Range Check

A pre-flight range check should be done before every flight, in case the signal loss is caused by the reflection of the signal by the nearby metal fence or concrete, and the shading of the signal by buildings or trees during the actual flight. Under normal circumstances, in Range Check mode, the RSSI at 150m is about 45-50.

1. Place the model at least 60 cm (2 feet) above the non-metal contaminated ground (such as on a wooden bench). The receiving antenna should be in a vertical position.
2. Ener the ETHOS system, move to the "RF System", scroll the Encoder to select "RANGE" mode and press Encoder. In range check mode, the effective distance will be decreased to 1/30.

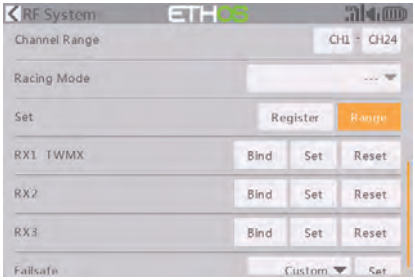

How to set Failsafe

There are 3 failsafe modes when the setting is enabled: No Pulse, Hold, and Custom mode.

- No Pulses Mode: On loss of signal, the receiver produces no pulses on any channel. To use this mode, select it in the menu and wait 9 seconds for the failsafe to take effect.
- Hold Mode: The receiver continues to output the last positions before the signal was lost. To use this mode, select it in the menu and wait 9 seconds for the failsafe to take effect.
- Custom Mode: Pre-set to required positions on the lost signal. Move the cursor to the failsafe mode of the channel and press Encoder, then choose the Custom mode. Move the cursor to the channel you want to set failsafe On and press Encoder. Then rotate the Encoder to set your failsafe for each channel and short-press the Encoder to finish the setting. Wait 9 seconds for the failsafe to take effect.

Note:

- **If the failsafe is not set, the model will always work with the last working status before the signal is lost. That could cause potential damage.**
- **When the failsafe is disabled on the RF module side, the failsafe set on the receiver side will be applied.**
- **SBUS port does not support the failsafe setting in No Pulses mode and always outputs signal. Please set "Hold" or "Custom" mode for the SBUS port.**

FCC

This equipment has been tested and found to comply with the limits for a Class B digital device, pursuant to part 15 of the FCC Rules

CE

The product may be used freely in these countries: Germany, UK, Italy, Spain, Belgium, Netherlands, Portugal, Greece, Ireland, Denmark, Luxembourg, Austria, Finland, Sweden, Norway, France and Iceland.

FLYING SAFETY

⚠ Warning:

To ensure the safety of yourself and others, please observe the following precautions.

ⓘ **Have regular maintenance performed.** Although your TANDEM X20 HD protects the model memories with non-volatile EEPROM memory (which does not require periodic replacement) and of a battery, it still should have regular check-ups for wear and tear. We recommend sending your system to your FrSky Service Center annually during your non-flying-season for a complete check-up and service.

Battery

ⓘ Using a fully charged battery (DC 6.5~8.4V). A low battery will soon die, causing loss of control and a crash. When you begin your flying session, reset your transmitter's built-in timer, and during the session pay attention to the duration of usage. Also, if your model used a separate receiver battery, make sure it is fully charged before each flying session.

ⓘ **Stop flying long before your batteries become over discharged. Do not rely on your radio's low battery warning systems, intended only as a precaution, to tell you when to recharge. Always check your transmitter and receiver batteries prior to each flight.**

Where to Fly

We recommend that you fly at a recognized model airplane flying field. You can find model clubs and fields by asking your nearest hobby dealer.

ⓘ **Always pay particular attention to the flying field's rules,** as well as the presence and location of spectators, the wind direction, and any obstacles on the field. Be very careful flying in areas near power lines, tall buildings, or communication facilities as there may be radio interference in their vicinity.

At the flying field

ⓘ To prevent possible damage to your radio gear, turn the power switches on and off in the proper sequence:

1. Pull throttle stick to idle position, or otherwise disarm your motor/engine.
2. Turn on the transmitter power and allow your transmitter to reach its home screen.
3. Confirm the proper model memory has been selected.
4. Turn on your receiver power.
5. Test all controls. If a servo operates abnormally, don't attempt to fly until you determine the cause of the problem.
6. Start your engine.
7. Complete a full range check.
8. After flying, bring the throttle stick to idle position, engage any kill switches or otherwise disarm your motor/engine.

If you do not turn on your system on and off in this order, you may damage your servos or control surfaces, flood your engine, or in the case of electric-powered or gasoline-powered models, the engine may unexpectedly turn on and cause a severe injury.

ⓘ **Make sure your transmitter can't tip it over.** If it is knocked over, the throttle stick may be accidentally moved, causing the engine to speed up. Also, damage to your transmitter may occur.

ⓘ In order to maintain complete control of your aircraft it is important that it remains visible at all times. Flying behind large objects such as buildings, grain bins, etc. must be avoided. Doing so may interrupt the radio frequency link to the model, resulting in loss of control.

⊘ Do not grasp the transmitter's antenna during flight. Doing so may degrade the quality of the radio frequency transmission and could result in loss of control.

⊘ As with all radio frequency transmissions, the strongest area of signal transmission is from the sides of the transmitter's antenna. As such, the antenna should not be pointed directly at the model. If your flying style creates this situation, easily move the antenna to correct this situation.

ⓘ **Don't fly in the rain!** Water or moisture may enter the transmitter through the antenna or stick openings and cause erratic operation or loss of control. If you must fly in wet weather during a contest, be sure to cover your transmitter with a plastic bag or waterproof barrier. Never fly if lightning is expected.

Updates

FrSky is continuously adding features and improvements to our radio systems. Updating (via USB Port or the Micro SD card) is easy and free. To get the most from your new transmitter, please check the download section of the FrSky website for the latest update firmware and guide for adjusting your sticks. (www.frsky-rc.com)

FrSky is continuously adding features and improvements to our products. To get the most from your product, please check the download section of the FrSky website www.frsky-rc.com for the latest update firmware and manuals

FrSky Electronic Co., Ltd. www.frsky-rc.com Contact us: frsky@frsky-rc.com
Add: F-4,Building C, Zhongxiu Technology Park, No.3 Yuanxi Road, Wuxi, 214125, Jiangsu, China Technical Support: sales4tech@gmail.com

FCC Warning

This device complies with part 15 of the FCC Rules. Operation is subject to the following two conditions: (1) This device may not cause harmful interference, and (2) this device must accept any interference received, including interference that may cause undesired operation.
Any Changes or modifications not expressly approved by the party responsible for compliance could void the user's authority to operate the equipment.

Note: This equipment has been tested and found to comply with the limits for a Class B digital device, pursuant to part 15 of the FCC Rules. These limits are designed to provide reasonable protection against harmful interference in a residential installation. This equipment generates uses and can radiate radio frequency energy and, if not installed and used in accordance with the instructions, may cause harmful interference to radio communications. However, there is no guarantee that interference will not occur in a particular installation. If this equipment does cause harmful interference to radio or television reception, which can be determined by turning the equipment off and on, the user is encouraged to try to correct the interference by one or more of the following measures:

-Reorient or relocate the receiving antenna.

-Increase the separation between the equipment and receiver.

-Connect the equipment into an outlet on a circuit different from that to which the receiver is connected.

-Consult the dealer or an experienced radio/TV technician for help.

IC Warning

This device complies with Industry Canada’s licence-exempt RSSs. Operation is subject to the following two conditions:

(1) This device may not cause interference; and

(2) This device must accept any interference, including interference that may cause undesired operation of the device.

Cet appareil est conforme aux CNR exemptes de licence d'Industrie Canada. Son

fonctionnement est soumis aux deux conditions suivantes :

(1) Ce dispositif ne peut causer d'interférences ; et

(2) Ce dispositif doit accepter toute interférence , y compris les interférences qui peuvent causer un mauvais fonctionnement de l'appareil.

RF Exposure Information and Statement

The SAR limit of USA/Canada (FCC/ISED) is 1.6 W/kg averaged over one gram of tissue. Device types: Twin digital radio system
(FCC ID: XYFTWINX14SP, IC: 23846-TWINX14SP) has also been tested against this SAR limit. The highest SAR value reported under this standard during product certification for use the body is 0.765W/kg. This device was tested for typical body-worn operations with the back of the handset kept 0mm from the body. To maintain compliance with FCC RF exposure requirements, use accessories that maintain a 0mm separation distance between the user's body and the back of the handset. The use of belt clips, holsters and similar accessories should not contain metallic components in its assembly. The use of accessories that do not satisfy these requirements may not comply with FCC RF exposure requirements, and should be avoided.

Le SAR limite pour les USA/Canada (FCC/ISED) est de 1.6 W/kg moyen sur un seul gramme de tissu.La valeur maximale déclarée sous ce critère lors de la certification du produit pour l'utilisation du corps est de 0.765W/kg Opérations typiques avec la partie arrière de la manoeuvre gardée à 0mm du corps, afin de maintenir la conformité avec les exigences du FCC relatives à l'exposition RF,L'utilisation des accessoires qui maintiennent une distance de séparation de 0mm entre le corps de l'utilisateur et le dos de la main.L'utilisation des accessoires qui ne satisfont pas à ces exigences peut ne pas être conforme aux exigences du FCC relatives à l'exposition à la RF.Et devrait être évité.

Body-worn Operation

This device was tested for typical body-worn operations. To comply with RF exposure requirements, a minimum separation distance of 0mm must be maintained between the user's body and the handset, including the antenna. Third-party belt-clips, holsters, and similar accessories used by this device should not contain any metallic components. Body-worn accessories that do not meet these requirements may not comply with RF exposure requirements and should be avoided. Use only the supplied or an approved antenna.

Cet appareil a été testé pour un fonctionnement typique du corps sous pression, pour satisfaire aux exigences relatives à l'exposition RF, une distance minimale de séparation de 0mm doit être maintenue entre le corps de l'utilisateur et la poignée.Y compris les antennes, les bandes de fréquences et les satellites, Des accessoires similaires utilisés par cet appareil ne doivent pas contenir de composants métalliques Seule la fourniture ou une antenne agrée.