@mobile

User's Manual

IB-10 (2016/Nov./15)

Copyright

This publication, including all photographs, illustrations and software, is protected under international copyright laws, with all rights reserved.
Neither this manual, nor any of the material contained herein, may be reproduced without the express written consent of the manufacturer.

Disclaimer: The manufacturer makes no representations or **warranties** with respect to the contents hereof and specifically disclaim any implied warranties of merchantability or fitness for any particular purpose. The manufacturer is not liable for technical and editorial error for this guide. The manufacturer reserves the right to revise or make changes to this publication without notice or obligation of the manufacturer to notify any person of such revision or changes.

Software Licenses

The software included with the product and referenced in this document is furnished under a License Agreement. This Agreement specifies permitted and prohibited uses of this product.

General Guidelines

- Read all of the instructions carefully.
- Save the instructions for future use.
- To ensure follow all warnings and instructions marked in the product documentation and within the computer.
- Except as explained elsewhere in this manual, do not attempt to service the computer yourself. Opening or removing covers might expose you to dangerous voltage points or other risks. Refer all servicing of marked components to qualified personnel.

Power Cord Requirements

The power cord you received with this computer conforms to local specifications for use in the country where you purchased it. Power cord use in other countries may require an additional adapter and/or separate power cord. For additional information on local power requirements, contact an authorized dealer, reseller, or service provider.

About the AC Adapter

The AC adapter will automatically recognize any compatible power supply connected to the computer. The AC adapter can also be used to recharge the battery, which begins immediately after the AC Adapter cord is connected. A green LED will light to confirm charging is in progress. The ideal range for safe operation of the computer is from 100 ~ 240V AC.

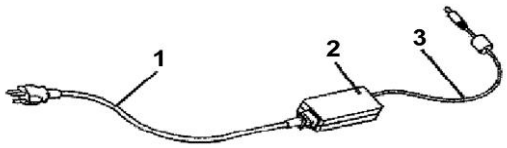

1. AC Power Cord / 2. AC Adapter / 3. DC (Direct Current) Cord

Warning :

- Using the AC adapter to power other devices can damage the adapter or the device. This AC adapter is only designed for use with the product.
- Be sure to only use the AC adapter that comes provided with this product or a compatible option from the manufacturer. Other adapters may cause damage to the computer and will not be covered under the warranty.
- Grasp the adapter plug and not the cord, when unplugging the adapter from an electrical outlet.
- If the power cord becomes damaged (exposed or frayed, etc.), replace with a new AC adapter. Using a damaged cord may cause an electrical shock and may result in fire.
- Power off and unplug the AC adapter from the computer before unplugging it from the electrical outlet.

Battery (Lithium-Ion)

NOTE: Refer to following hazard statement within the service and operating documentation or on the adjacent label to the battery.

1. English

CAUTION: DANGER OF EXPLOSION IF BATTERY IS INCORRECTLY INSTALLED. REPLACE ONLY WITH SAME OR EQUIVALENT TYPE RECOMMENDED BY THE MANUFACTURER. DISCARD OF USED BATTERIES IN ACCORDANCE WITH THE MANUFACTURER'S INSTRUCTIONS.

2. French

IL Y A DANGER D'EXPLOSION S'IL Y A REMPLACEMENT INCORRECT DE LA BATTERIE. REMPLACER UNIQUEMENT AVEC UNE BATTERIE DU MÊME TYPE OU D'UN TYPE RECOMMANDÉ PAR LE CONSTRUCTEUR. METTER AU RÉBUT LES BATTERIES USAGÉES CONFORMÉMENT AUX INSTRUCTIONS DU FABRICANT.

3. German

VORSICHT ! Explisionsgefahr bei unsachgemäßen Austausch der Batterie.
Ersatz nur durch denselben oder einem vom Hersteller empfohlenem ähnlichen Typ.
Entsorgung gebrauchter Batterien nach Angaben des Herstellers.

4. Swedish

Explosionsfara vid felaktigt batteribyte.
Använd samma batterityp eller en ekvivalent typ som rekommenderas av apparattillverkaren. Kassera använt batteri enligt fabrikantens instruktion.

5. Danish

Lithiumbatteri- Eksplosionsfare ved fejlagtig håndtering.
Udskiftning må kum ske med batteri af samme fabrikat og type.
Lever det brugte batteri tilbage til leverandoren.

6. Norwegian

Ekspolsjonsafe ved feilaktig skifte av batteri.
Benytt samme batteritype eller en tilsvarende type anbefalt av apparatfabriknten.
Brukte batterier kasseres I henhold til fabrikantens instruksjoner.

7. Finnish

Paristo voi räjähtää, jos se on virheellisesti asennettu.
Vaihda paristo ainostaan laitevalmistajan suosittelemaan tyyppiin.
Hävitä käyteet paristo valmistajan ohjeiden mukaisesti.

FCC Statement

This equipment has been tested and found to comply with the limits for a Class B digital device, pursuant to part 15 of the FCC Rules. These limits are designed to provide reasonable protection against harmful interference in a residential installation. This equipment generates, uses, and can radiate radio frequency energy, and if not installed and used in accordance with the instructions, may case harmful interference to radio communications. However, there is no guarantee that interference will not occur in a particular installation. If this equipment does cause harmful interference to radio or television reception, which can be determined by turning the equipment off and on, the user is encouraged to try to correct the interference by one or more of the following measures:

- Reorient or relocate the receiving antenna.
- Increase the separation between the equipment and receiver.
- Connect the equipment into an outlet on a circuit different from that to which to receiver is connected.
- Consult the dealer or an experienced radio/TV technician for help.

Use of shielded cord is required to comply with Class B limits in Subpart B of Part 15 of the FCC rules. Do not make any changes or modifications to the equipment unless otherwise specified in the manual. If such changes or modifications should be made, you could be required to stop operation of the equipment.

FCC Caution:

1. The device complies with Part 15 of the FCC rules. Operation is subject to the following two conditions：
   （1）This device may not cause harmful interference.
   （2）This device must accept any interference received, including interference that may cause undesired operation.

2. This Transmitter must not be co-located or operating in conjunction with any other antenna or transmitter.

3. FCC RF Radiation Exposure Statement
   This device has been tested for compliance with FCC RF Exposure (SAR) limits. The equipment complies with FCC RF radiation exposure limits set forth for an uncontrolled environment.

4. Changes or modifications to this unit not expressly approved by the party responsible for compliance could void the user authority to operate the equipment.

CE Statement

This equipment has been designed to comply with EMC directive 89/336/EEC

And Decision 768/2008/EC

As an amended by 92/31/EEC and the Low Voltage directive 2006/95/EC,

This equipment has been comply with EMC directive 2011/65/EU And Decision 768/2008/EC

Manufacturers will need to test and approve the product to these directives.

Table of Contents

BEFORE USING YOUR COMPUTER 1
Product Features 2
Installation Guidelines 4
CHAPTER 1 6
GETTING STARTED 6
Unpacking the Product 7
Packing List 7
Power Supply 8
Using the Battery 8
To install and remove the Battery Pack 9
Installing the Battery/ Remove / Replacing the Battery 9
Caring for the Battery 10
Using the AC adapter 10
CHAPTER 2 11
SYSTEM OVERVIEW 11
Front View of the Computer 12
Right Side View of the Computer 15
Left Side View of the Computer 16
Bottom View of the Computer 17
Top View of the Computer 18
Rear View of the Computer 19
SIM Card 19
CHAPTER 3 22
PROTECTING AND MAINTAINING 22
Caring for Your Computer 23
Routine Care 23
Caring for the Battery 23
Caring for the AC Adapter 24
Caring for the Touch Screen Display 24
CHAPTER 4 25
SPECIFICATIONS & SOFTWARE 25
Specifications and Standard Features 26
Software 30
Using The Front Panel Hot Key Utility 30
Define the function for Hot Key Utility 34

Before Using Your Computer

Congratulations on your purchase of the product.
You will soon be in command of the worlds most lightweight, efficient and secure solution for managing all of your technology and mission critical data. Scale the computer and streamline the costs of day-to-day business operations and multimedia demands. Discover the computer's unparalleled in-the-field versatility for efficiently and reliably coordinating a myriad of tasks without costing a fortune.

Chapter Preview:

- Product Features
- Installation Guidelines

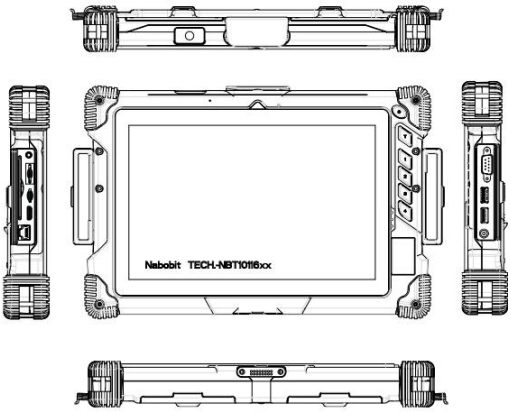

Product Features

The product is a portable multimedia device empowering highly mobile users with wireless computing capabilities for day-to-day business and wireless applications. Its light weight and supreme portability combined with state-of-the-art multimedia capabilities provide exceptional writing, maneuvering, and on your feet computing. The product's primary features include:

- Processor and OS (Operating System): INTEL Bay Trail-M Quad Core N2930 1.86GHZ Processor and Microsoft® Windows Embedded Standard 7 & 8 & 8.1/ Microsoft® Windows 7 & 8 & 8.1 & Win10 Professional / Linux OS, a stable platform, providing exceptional performance for highly mobile users under extreme and variable conditions.

- **Multimedia LCD Display:** 10.1 "-inch TFT 1280X800 (XGA) LCD with Touch Screen Control Panel (LED back light / Sunlight readable) and Smart Panel Application enhancing user's ability to view data outdoors and under moving conditions.
- **Complete Connectivity from Anywhere:** The computer's built-in Bluetooth 4.0®, IEEE 802.11b+g+n WLAN and 3.5G Module offers the mobile user the maximum opportunities to stay connected from anywhere, ensuring uninterrupted data sharing and synchronization. Limitless instant accesses to business critical information.
- **Integrated Ports and Adaptability:** Multiple I/O ports (1 x USB 2.0, 1 x USB3.0, Ethernet,RS-232 Port) provide optimum versatility for any industrial or Business needs. Its ultra light weight and integrated wireless capability enable an effective mobile office. Multiple carrying options provide quick on-the-fly versatility while executing daily tasks comfortably and efficiently.

Special Integrated Functions: Multiple special devices,

Code 、Fingerprint、Scanner、MSR、Smart Card Reader 、2M / 5M Pixel both sides Camera, can provide useful functions for business and industrial area.

- **Enhanced Protective Equipment**:

  The computer, designed for IP65 ingress protection rating, can provide indoor and outdoor protections of no ingress of dust and water jets against enclosure without harmful effects. Furthermore, the computer is equipped with 4 corner buffers to avoid drop-shock damages.

- **Enhanced Security Information:**

  The computer provides the Fingerprint device and SAM card slot to secure your data protection.

Note: Read the following Instructions Manual carefully before unpacking and setting it up. Refer to the Instructions Manual if you encounter any problems. Keep this Instructions Manual on hand for your reference.

Installation Guidelines

Read the following before assembling or disassembling the computer:

1. Follow all warnings and instructions marked on the product and within the Manual.
2. Before you begin cleaning the computer, make sure that you have unplugged all power cords and the device is Powered Off. Use a damp cloth for cleaning. Do not use liquids of any kind of aerosol cleaners.
3. Never place the computer on an unstable surface; it may fall, causing serious damage to it.
4. Avoid using a telephone (other than a cordless type) with the computer during an electrical storm. There may be remote risk of electric shock from lightning.
5. To ensure optimum performance and to protect the computer from overheating, ventilation slots must not be covered or obstructed in any way. The computer should never be placed near a radiator, heat register or in a built-in cabinet unless adequate ventilation is provided.
6. The computer should only be operated using the specified power indicated on the Warning Label located on the battery. If you are unsure of the type of power available to your locale, consult a dealer or the local power company.
7. If using an extension cord with the computer, make sure that the total ampere rating of the equipment plugged into the extension cord does not exceed the extension cord ampere rating. Also note that the total rating of all the devices plugged into the circuit does not exceed the fuse rating.
8. Never force objects of any kind into the computer's ventilation or housing slots as they may contact dangerous voltage points or spark resulting in electrical shock or a fire. Keep all liquids of any kind away from the computer.
9. Always disconnect all telephone lines & all power cords from the wall outlet before servicing or disassembling this product. Refer to the dealer or a qualified technician under the following conditions:

a. When the power cord or plug is damaged or frayed.
b. If liquid has been spilled into the product.
c. If the computer has been exposed to rain or water.
d. If the computer does not operate normally when the operating instructions are followed. Adjust only those controls that are specified in the Operating Instructions or improper adjustment may require calibration again from a qualified technician.
e. If the computer has been dropped or the housing has been damaged.
f. If the computer experiences a distinct change in performance, indicating a need for service.

CHAPTER 1

Getting Started

Chapter Preview:

- **Unpacking and setting up the Product**
- **Packing list**
- **Power Supply**
- **The Stylus Pen**

Unpacking the Product

Before unpacking the product, prepare a suitable workspace for your computer. Make sure the workspace is level, stable and near an electrical outlet.

1. Open the box and remove the contents preserving the integrity of the box as you may need it and all of the packing materials for future shipping.
2. Inspect the contents for damage. If you find any irregularities or anything appears to be missing, contact your Dealer immediately. Check that the following components are included in the box:

Packing List

1. **The computer Unit**
2. **Power Cord**
3. **A.C Adaptor**
4. **Battery x 2 (Build-In)**
5. **Hand Strip**
6. **Belt**

Power Supply

The computer can be powered using either the built in battery or the AC Power Adapter plugged into any grounded AC power outlet.

Using the Battery

The primary source of power for the computer is a Lithium-Ion battery pack. The battery pack will first need to be installed on the backside of the computer. After following the battery installation instructions below, plug the AC adapter into any electrical outlet and the computer will begin recharging immediately. In the future, you should not have to access the battery pack unless you wish to replace it with a fresh one.

Note:

1. The Battery LED lights green when charging and will turn off when the battery is fully charged.
2. When charging the first time, it is recommended that the battery be allowed to charge for no less than eight hours.
3. It will take a longer time to complete the charging process, if the user is using the computer at the same time.
4. Charging temperature range is regulated between -10℃~ 25 ℃ . Do not charging the battery out of recommended temperature range.
5. Do not discharging battery below 10 % level, It is recommended charging the battery within 3 months,

■ **To install and remove the battery pack:**

- Using the Power Switch to power down the computer.

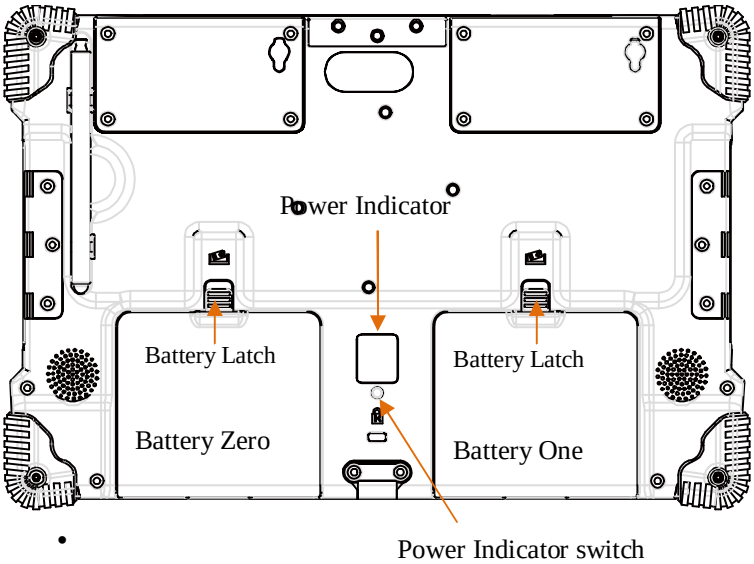

■ **Installing the Battery**

Turn the latch to open position then removed the cover and gently put the batteries into the battery bay. Then, turn the latch to close position.

■ **Removing/Replacing the Battery**

Turn the latch to open position then removed the cover and gently take out the batteries from the battery bay. Then, turn the latch to close position.

- **Battery Power Indicator**

  1. Pressing the power indicator switch to display the value of the battery. The battery value will showing on the LED board , Each one LED represent a 20 % value.

- **Caring for the Battery**

  Do not heat, tamper or place the battery in water or near a fire.

  Do not subject the battery to unusual forces such as hitting it, stepping on it or dropping it.

  Do not attempt to open or service the battery pack.

  Only replace the battery with the same model or one of compatible design.

• Using the AC Adapter

When connecting the computer to external power:

1. Plug the DC power cord into the DC jack on the computer.
2. Plug the 3-prong AC power adapter cord into a grounded electrical outlet.
3. Use the AC adapter to power the computer or recharge the battery when it is low.

- **Caring for the AC Adapter**

  Be sure to only use the AC adapter that comes provided with this product or a compatible option from the manufacturer. Other adapters may cause damage to the computer and will not be covered under the warranty.

  Grasp the adapter plug and not the cord, when unplugging the adapter from an electrical outlet.

  If the power cord becomes damaged (exposed or frayed, etc.), replace with a new AC adapter. Using a damaged cord may cause an electrical shock and may result in fire.

  Power off and unplug the AC adapter from the computer Before unplugging it from the electrical outlet.

CHAPTER 2

System Overview

This chapter contains six illustrations, highlighting each external component and its respective functions.

Chapter Preview:

- Front view of the Computer
- Right side view of the Computer
- Left side view of the Computer
- Top view of the Computer
- Bottom view of the Computer
- Rear view and Build In Back Stand

Front View of the Computer

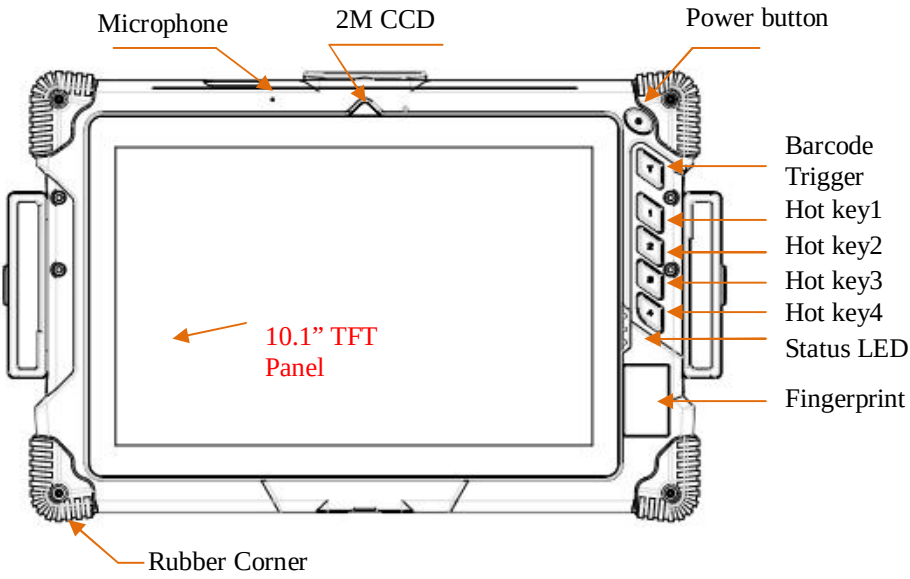

- **10.1” inch TFT (1280x800) LCD Display with Touch Screen Control Panel:**

Data can be entered the computer module using the stylus pen or a soft/USB/wireless keyboard. A soft keyboard can be located by tapping the keyboard icon in the bottom right on the desktop. Data can also be entered via a USB keyboard plugged into the USB port on the right side of the computer. The computer’s USB ports support most USB keyboards and pointing devices.

- **Microphone:**

Effortless input of monaural sound recording.

- **2 M CMOS Camera :**

The build-in front 2M pixels CMOS Camera supports video applications for all media software. The user can make a video communication in the network.

- **Power Button:**

The computer Turn On / Off

- **Barcode On/Off**

The button provide a Trigger function for Barcode Scanner

- **Hot Key**

These 4 quick access buttons are used for navigating applications in the Microsoft Windows 7& 8 & 8.1 environment (or relevant OS) and to setup the System BIOS Utility in DOS mode (alternative function).

- **Status LEDs:**

LED Indicator	Relevant Component	Description
Orange (Flashing)	Hard Drive	Disk Accessing
Green (Off)	Battery	Battery Available
Green (Solid)	Battery	Battery Charging
Blue (Solid)	Power	System Powered On

- **Fingerprint:**

  The device is virtually immune from attacking of fake finger. It can self-calibrate each sensor's output signal for different skin conditions like sweaty, scarred and dry, to be an excellent image quality.

- **Rubber Corner**

  The Rubber Corner provides a protection of falling down and related damages.

■ Right Side View of the Computer

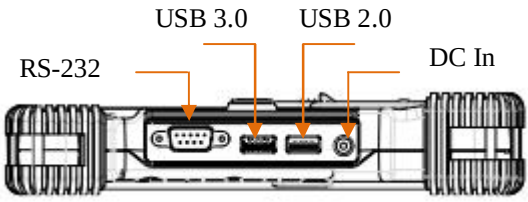

■ **DC-in Jack:**

Plug the DC (Direct Current) end of the AC Adapter into this jack for external power and battery recharging. Before plugging in the power cord, you must first verify that the external power voltage is appropriate for your geographical area.

■ **USB 2.0 & 3.0 Ports:**

Permits hot plugging of USB peripheral devices to the computer. The USB ports support most USB mouse and keyboard devices.

■ **RS-232 Port:**

Offer an interface connecter of RS-232 that extended application of instruments for industrial use.

DF Trans

Left Side View of the Computer

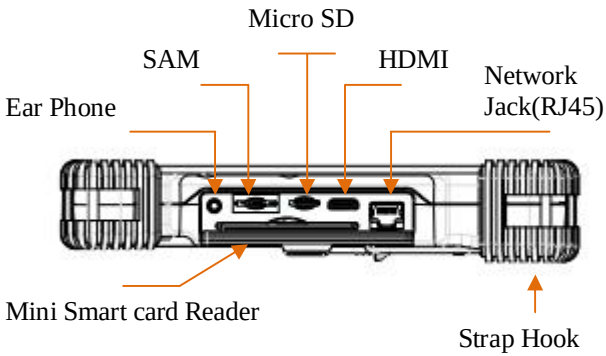

- **Network Jack (RJ45):**

  Interfaces with an Ethernet 10/100/1000 Mbps Base-T network connection.

- **HDMI :**

  The High Definition Pictures can be transmitted to display from computer with the HDMI cable.

- **Mini Smart Card Reader: (optional)**

  This device can read a various data include ATM card for business.

- **Micro SD**

  Micro Secure Digital (SD) Card Slot

- **SAM**

  SAM card slot to secure your data protection.

- **Ear Phone**

  Enjoy the Audio

- **Strap Hook:**

  The user can grasp the machine by using the hand strip,

Bottom View of the Computer

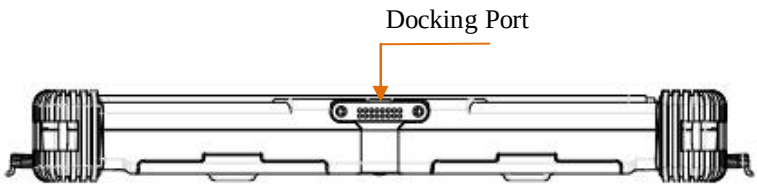

- **Docking Port：**

The extended multi-function included: the battery charger port, the USB ports supporting most USB mouse and keyboard devices, RJ-45 Internet port, RS-232 port, DC-In Jack, Microphone and Headphone.

Top View of the Computer

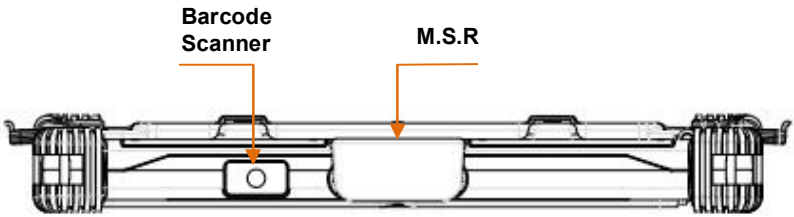

- **Barcode Scanner: (optional)**

  Omni directional bar code reading.
  Scan rate of up to 200 scans per second in linear emulation mode or 56 scans per second in Omni directional mode.
  Fully compatible with Intermec's family of decoded engines.

- **MSR**: **(optional)**

  The reader delivers superior reading performance with the ability to encrypt sensitive card data.

Rear View of the Computer

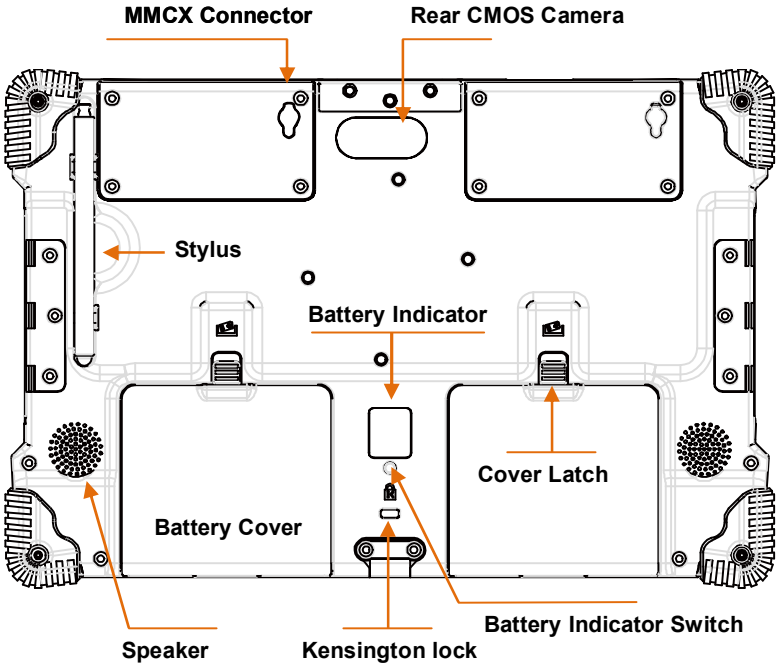

- **Stylus Pen(optional):**

  A stylus pen is used to activate the touch screen display and functions in the same way as an external mouse. The stylus pen is partially visible from the left side of the computer and can be located by pulling it from its secure housing. Only use the tip of the stylus pen when interacting with the LCD display to prevent damage to the display surface.

- GPS: (optional)

  Support 20-channel GP

- **Rear CMOS Camera: (optional)**

The build-in 5M pixels CMOS camera module supports auto reverse function. Images can be captured and disseminated instantaneously.

- **Speakers:**

The computer's built-in a single speaker support audio applications for all media software. Volume and equalizer control can be adjusted via the OS or additional multimedia application software. Sound will mute when headphones are detected.

- **Battery Pack:**

3-cell 3400mAh x2 removable Lithium-Ion battery pack comes standard with the computer. Each cell comes equipped with short circuit, over-charge, over-discharge, over-current and abuses protection.

- **Hand Strip:**

To adjust the strip length for your convenience use.

■ SIM Card:

Please remove the cover of the battery pack

And remove the battery pack

Please insert the SIM Card to the slot

ABBYY PDF Transformer 3.0
Click here to buy
www.ABBYY.com

ABBYY PDF Transformer 3.0
Click here to buy
www.ABBYY.com

CHAPTER 3

Protecting & Maintaining

Chapter Preview:

- Caring for your Computer
- Configuring DRAM and SIM Card
- Adjusting the Resolutions for the Computer's Display and an External Display

Caring for Your Computer

To guarantee a long life for the computer and to ensure it functions optimally, pay particular attention to the following recommended maintenance guidelines.

Routine Care

Follow these guidelines to keep the computer working properly:

- Do not attempt to disassemble or modify the computer in any way.
- Do not place anything on top of the device or its LCD display to prevent damage to the screen.
- Avoid using and storing the computer in locations where static or electrical interference can damage in the internal components.
- Avoid using and storing the computer in locations exposed to extreme temperature fluctuations, likely condensation, or direct sunlight.
- Keep the device away from moisture such as exposure to liquids or precipitation.
- Only operate the device with the battery pack installed, even when using external power. This ensures the computer will have the sufficient power to maintain and save data when disconnected from the external power source.
- Store the device in its docking station when not in use.

Caring for the Battery

- Do not heat, tamper or place the battery in water or near a fire.
- Do not subject the battery to unusual forces such as hitting it, stepping on it or dropping it.
- Do not attempt to open or service the battery pack.
- Only replace the battery with the same model or one of compatible design.

ABBYY PDF Transformer 3.0 Click here to buy www.ABBYY.com

Caring for the AC Adapter

- Be sure to only use the AC adapter that comes provided with this product or a compatible option from the manufacturer. Other adapters may cause damage to the computer and will not be covered under the warranty.
- Grasp the adapter plug and not the cord, when unplugging the adapter from an electrical outlet.
- If the power cord becomes damaged (exposed or frayed, etc.), replace with a new AC adapter. Using a damaged cord may cause an electrical shock and may result in fire.
- Power off and unplug the AC adapter from the computer before unplugging it from the electrical outlet.

Caring for the Touch Screen Display

- Never spray liquids of any kind directly onto the display screen or allow excess liquid to drip into the device.
- Never place anything on the display screen that could cause damage to the LCD display, for example, drinks and food.
- Never scratch the surface of the LCD display with any sharp or damaging objects.
- Avoid exposing the computer to direct sunlight or excessive ultraviolet radiation for an extended period of time.
- To clean the exterior of the device, wipe the screen and the housing with a soft, damp cloth moistened with water. Never use soap or other cleaning products on the LCD screen. It may discolor the outer coating and damage screen visibility.

ABBYY PDF Transformer 3.0
Click here to buy
www.ABBYY.com

ABBYY PDF Transformer 3.0
Click here to buy
www.ABBYY.com

CHAPTER 4

Specifications & Software

Chapter Preview:

- Specifications and Standard Features
- Software

ABBYY PDF Transformer 3.0 Click here to buy www.ABBYY.com

Specifications and Standard Features

Processor

INTEL Bay Trail-M Quad Core N2930 1.86 GHZ

Operating System

Microsoft® Window 7 / Window 8 / Window 8.1/ Win 10 (Embedded / Professional)
Option: Linux

System BIOS

Feonix BIOS

Memory

DDR III –L SO-DIMM Socket 1x204 pin support/ up to 4GB

Display

- 10.1”-inch TFT (1280x800) LCD Touch Panel
- Touch Type: Capacitive or 4 Wires Resistive
- Simulation to 1280x800 by Hot Key
- LED Back Light / Sunlight Readable

Pointing Device

Touch Panel Screen and Stylus Pen Input Device

Storage

32G ~512 GB Solid State Drive (SSD)

ABBYY PDF Transformer 3.0
Click here to buy
www.ABBYY.com

Communication

- 10/100/1000 Mbps Base-T Ethernet LAN

CMOS Camera

- 2M/5M Pixels CMOS Camera Module
- Support Auto Reverse Function

MSR

Encrypted MSR

Bar Code Scanner

Support 1D/2D bar code

Smart Card Reader

Operates ISO 7816

Fingerprint

Sensor Scan Area: 9.6 mm x 0.2 mm

Image size: 192 x 4 pixels

Image resolution: 508 DPI

Automatic image calibration

Brightness

Adjust by Software

GPS (optional)

- Support 20-channel GPS

Multimedia

- Internal microphone and single speakers
- External volume on/off controls via hot key setting

ABBYY PDF Transformer 3.0 Click here to buy www.ABBYY.com

Battery

External two 3-cell 3400mAh Removable Lithium-Ion Battery Pack. Short circuit, over-charge, over-discharge, over-current and abuses protected.

Power Supply

External AC Adapter (175g / AC Input 100~240V, 50/60Hz, 3 Pin Inlet / DC Output 16V, 4.0 A, DIM:107.7mm x 45.9 mm x 30 mm) includes Power Cord.

Included Accessories

Stylus pen(Option), Hand strip, power cord, adapter and belt.

Interface

1x USB 2.0 Port
1x USB 3.0 Port
Micro SD Card Port
Sam Card Port
RS-232 Port
HDMI Port
Ethernet (RJ45)
Microphone Build-in
Ear phone
1 x 2 Speakers
Docking Port
DC Power In
LED Status Indicators :

HDD LED	(Orange)	Flashing	–	Disk Accessing
Battery LED	(Green)	Off	–	Battery Available
		Solid	–	Battery Charging
Power LED	(Blue)	Solid	–	System Powered On

Mobility

Dimensions: 305.80mm x 246.43mm x 39.35mm
Warranty: ONE year limited warranty parts.

ABBYY PDF Transformer 3.0
Click here to buy
www.ABBYY.com

Docking

USB 2.0 x 4
RJ-45
RS-232
DC-IN
Micro Phone
Headphone
VGA Port

Environmental Specifications

- Operating temperature : -10° to 25°C (14° to 77°F)
- Storage temperature : -20° to 75°C (-4° to 167°F)

Certification of System FCC / CE / EN 60950-1 IP65

ABBYY PDF Transformer 3.0
Click here to buy
www.ABBYY.com

Using The Front Panel Hot Key Utility

Please refer to the following descriptions for each of all 5 hot keys.

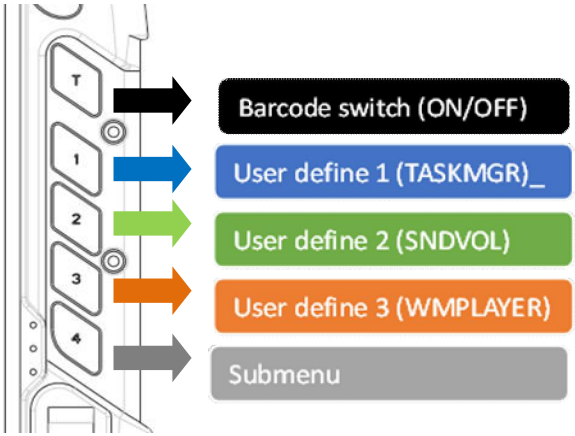

- **Key T :**

  A dedicated button to enable / disable Barcode function.

ABBYY PDF Transformer 3.0
Click here to buy
www.ABBYY.com

- Key 1:

The defaulted key function is to launch “Windows Task Manager” application to manage your applications.

The user is able to redefine the key function.

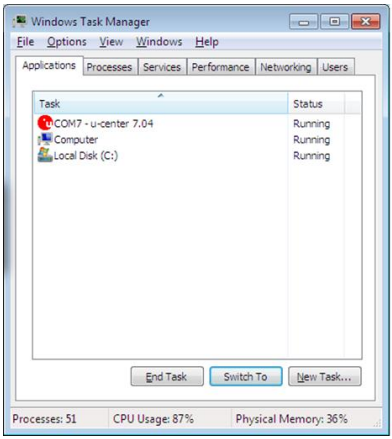

- Key 2:

The defaulted key function is to launch “Cap Sound” application to enable / disable audio recorder.

The user is able to redefine the key function.

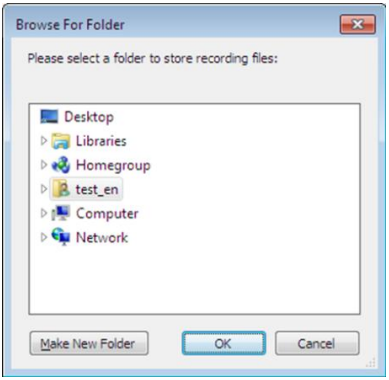

ABBYY PDF Transformer 3.0
Click here to buy
www.ABBYY.com

- Key 3:

The defaulted key function is to launch “Windows Media Player” application to play music or video.

The user is able to redefine the key function.

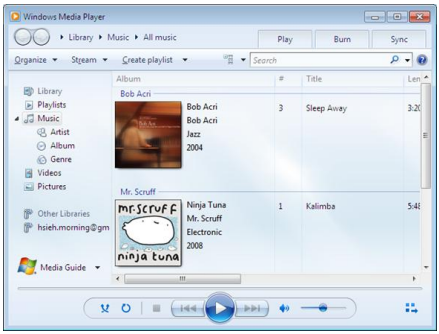

- Key 4:

Press Key 4 to launch submenu function. The “submenu bar” as the following will be displayed on the desktop.

ABBYY PDF Transformer 3.0
Click here to buy
www.ABBYY.com

The statuses of the communication capacities will be displayed on the submenu bar. Key 1, Key 2, Key 3 and Key 4 are endowed with different functions when the "submenu bar" was triggered.
Please refer to the following descriptions.

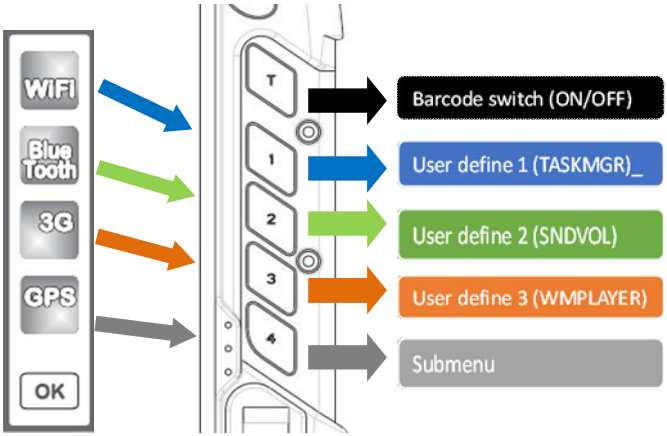

Click WiFi icon or press Key 1 to enable / disable the wireless function.

Click Bluetooth icon or press Key 2 to enable / disable the bluetooth function.

ABBYY PDF Transformer 3.0
Click here to buy
www.ABBYY.com

Click 3G i con or press Key 3 to enable / disable the 3G function.

Click GPS i con or press Key 4 to enable / disable the GPS function.

Click OK icon or wait for 3 seconds to Exit.

■ Define the Functions for Hot Key Utility

1. Right-click the “Hot Key” icon in the Windows system tray, then select “Define” to launch the “User Defined Function” application.

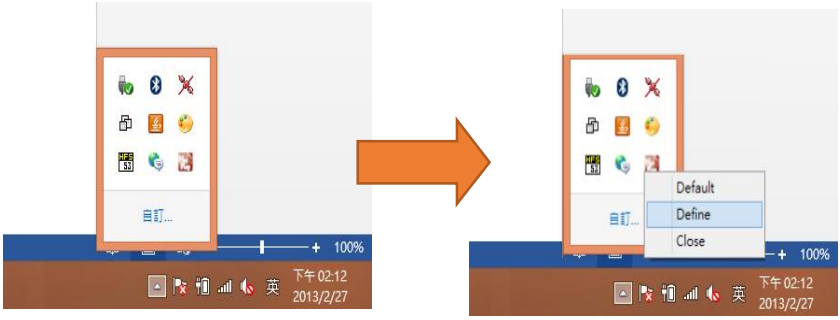

ABBYY PDF Transformer 3.0
Click here to buy
www.ABBYY.com

2. Type the correct path of the APP or browse the Folder icon to select your APP

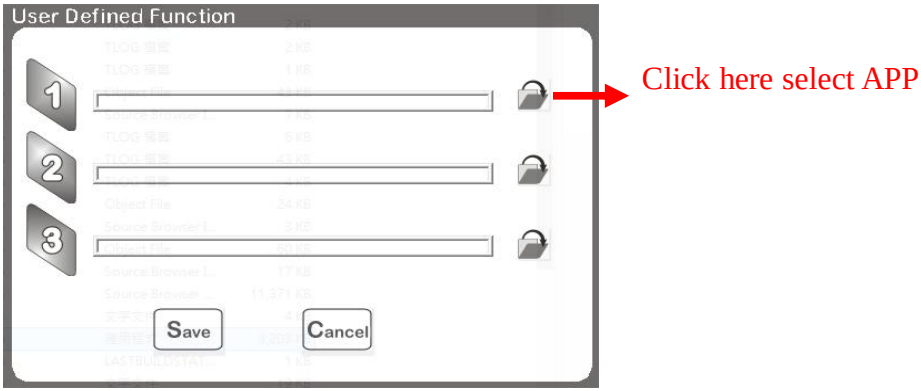

Make sure the defined APP path is correct.

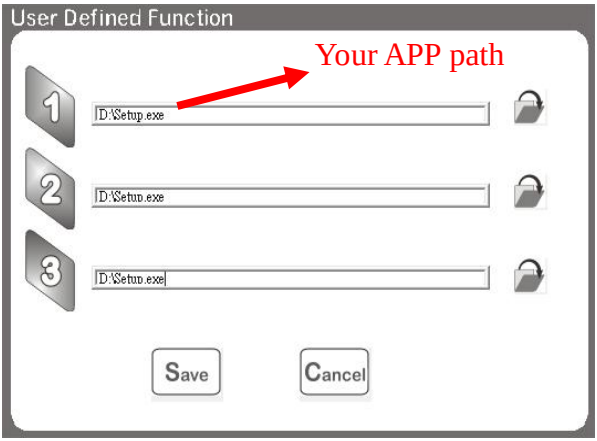

Click “Save” to confirm your selections.

FCC Statement

1. This device complies with Part 15 of the FCC Rules. Operation is subject to the following two conditions:

(1) This device may not cause harmful interference.

(2) This device must accept any interference received, including interference that may cause undesired operation.

2. Changes or modifications not expressly approved by the party responsible for compliance could void the user's authority to operate the equipment.

NOTE:

This equipment has been tested and found to comply with the limits for a Class B digital device, pursuant to Part 15 of the FCC Rules. These limits are designed to provide reasonable protection against harmful interference in a residential installation.

This equipment generates uses and can radiate radio frequency energy and, if not installed and used in accordance with the instructions, may cause harmful interference to radio communications. However, there is no guarantee that interference will not occur in a particular installation. If this equipment does cause harmful interference to radio or television reception, which can be determined by turning the equipment off and on, the user is encouraged to try to correct the interference by one or more of the following measures:

Reorient or relocate the receiving antenna.

Increase the separation between the equipment and receiver.

Connect the equipment into an outlet on a circuit different from that to which the receiver is connected.

Consult the dealer or an experienced radio/TV technician for help.

SAR Information Statement

Your wireless phone is a radio transmitter and receiver. It is designed and manufactured not to exceed the emission limits for exposure to radiofrequency (RF) energy set by the Federal Communications Commission of the U.S. Government. These limits are part of comprehensive guidelines and establish permitted levels of RF energy for the general population. The guidelines are based on standards that were developed by independent scientific organizations through periodic and thorough evaluation of scientific studies. The standards include a substantial safety margin designed to assure the safety of all persons, regardless of age and health. The exposure standard for wireless mobile phones employs a unit of measurement known as the Specific Absorption Rate, or SAR. The SAR limit set by the FCC is 1.6 W/kg. * Tests for SAR are conducted with the phone transmitting at its highest certified power level in all tested frequency bands. Although the SAR is determined at the highest certified power level, the actual SAR level of the phone while operating can be well below the maximum value. This is because the phone is designed to operate at multiple power levels so as to use only the power required to reach the network. In general, the closer you are to a wireless base station antenna, the lower the power output. Before a phone model is available for sale to the public, it must be tested and certified to the FCC that it does not exceed the limit established by the government adopted requirement for safe exposure. The tests are performed in positions and locations (e.g., at the ear and worn on the body) as required by the FCC for each model. The highest SAR value for this model phone when tested for use on the body, as described in this user guide, is **0.637W/Kg**(Body-worn measurements differ among phone models, depending upon available accessories and FCC requirements). While there may be differences between the SAR levels of various phones and at various positions, they all meet the government requirement for safe exposure. The FCC has granted an Equipment Authorization for this model phone with all reported SAR levels evaluated as in compliance with the FCC RFexposure guidelines. SAR information on this model phone is on file with the FCC and can be found under the Display Grant section of http://www.fcc.gov/ oet/fccid after searching on
FCC ID: XZO-IB10Additional information on Specific Absorption Rates (SAR) can be found on the Cellular Telecommunications Industry Asso-ciation (CTIA) web-site at http://www.wow-com.com. * In the United States and Canada, the SAR limit for mobile phones used by the public is 1.6 watts/kg (W/kg) averaged over one gram of tissue. The standard incorporates a sub-stantial margin of safety to give additional protection for the public and to account for any variations in measurements.

Body-worn Operation

This device was tested for typical body-worn operations. To comply with RF exposure requirements, a minimum separation distance of 10mm must be maintained between the user's body and the handset, including the antenna. Third-party belt-clips, holsters, and similar accessories used by this device should not contain any metallic components. Body-worn accessories that do not meet these requirements may not comply with RF exposure requirements and should be avoided. Use only the supplied or an approved antenna.