Kapsch TrafficCom

Technical Manual
Roadside ITS Station RIS-9160-xx0x

This device provides communication protocols based on IEEE WAVE or ETSI ITS G5 Standards

Doc No. 47000001566
Version 02

Order number: 47000001566
Document type THb
Document issue 02
Document status released
Date of issue 2018-02-01
Valid from

Author: Tugrul Güner, Alfred Brendinger

Assessor: Alfred Brendinger, Peter Ullrich, Heinz Liebhart, Alexander Paier, Herbert Diemling

Release: Tugrul Güner

Disclaimer and Limitation of Liability

The products described in this manual are provided “as is” and without any warranties of any kind, either express or implied. Kapsch TrafficCom disclaims all warranties, express or implied, including, but not limited to, warranties of title, legality or non-infringement or misappropriation of any intellectual property rights of third parties or implied warranties of merchantability or fitness for a particular purpose. Under no circumstances will Kapsch TrafficCom (including its affiliates, licensors, contractors, suppliers, assignees, subsidiaries, and the respective officers, directors, employees, shareholders, agents and representatives of each of them) be liable for any expenses, fees, claims, damages or losses in any way relating to or arising out of the products described in this manual. Applicable law may not allow certain warranty exclusions, so one or more of the above disclaimers may not apply to you.

Copyright © Kapsch TrafficCom AG 2018
Duplication as well as utilization of contents of this documentation are illegal without our explicit consent.

Table of Contents

Page

Associated Documents **6**

Information About This Document **6**

Text Conventions 7
Important Text Elements 7
Abbreviations....8

Warning to Users in the United States **9**

Regulatory Information **10**

Software Licenses **11**

Safety Instructions **11**

Maintenance Instructions **11**

Inspection Instructions **11**

Environmental Information **12**

Visual Inspection **12**

Installation Instructions **12**

General Information **12**

Definitions....12

System Overview **13**

Performance Overview....13
US Version 13
European Version....13
System Architecture 14
Compact Architecture 14
System Interfaces 15

Product versions **19**

Installation **20**

Mounting....20
Device without a mounting plate 21
Device with mounting plate “M”....22
Device with mounting adapter “W”....23
Electrical Installation....24
Signals at the LAN/PoE System-Connector....24
System cable connection....25
Product Specifications....28
Mechanical Dimensions 31

Conformity **32**

Standards 32
Statement of Conformity 34

Optional Equipment **35**

Mounting Bracket for RIS-9160....35
Protection caps and termination plugs 36

Table of Figures

Page

Figure 1 Roadside ITS Station RIS-9160 13
Figure 2 Functional block diagram 15
Figure 3 System Interfaces 15
Figure 4 Auxiliary antenna ports RIS-9160 16
Figure 5 Position of the Status LEDs 17
Figure 6 RIS-9160 without a mounting plate 21
Figure 7 RIS-9160 with mounting plate “M” – rear view 22
Figure 8 RIS-9160 with mounting plate “M” – side view 22
Figure 9 RIS-9160 with Mounting adapter „W” 23
Figure 10 Remove original gasket 26
Figure 11 Position of the sealing 26
Figure 12 Cable Connection Mounting Details 26
Figure 13 Direction of the Rubber Gasket 27
Figure 14 RIS-9160 with connected system cable 27
Figure 15 Dimensions of RIS-9160 without mounting plate 31
Figure 16 Dimensions of RIS-9160 with mounting plate ”M” 31
Figure 17 Dimensions of RIS-9160 with mounting adapter “W” 32
Figure 18 Mounting Bracket with safety wire 35
Figure 19 Dimensions and drilling plan of the Mounting Bracket 35

List of Tables

Table 1 Available Device versions of RIS-9160-xx0x 6
Table 2 Text Formats and their Meaning 7
Table 3 D1 – General Status LED 17
Table 4 D2 – Power LED 18
Table 5 RIS-9160 device versions 19
Table 6 LAN/PoE connector signals 24
Table 7 Connector assembly parts 25
Table 8 Standards 32
Table 9 Protection caps and termination plugs 36

Associated Documents

none -

Information About This Document

Objective

This Manual is the common Description, Installation and Service Manual for the device family **RIS-9160-xx0x** with Kapsch part numbers 34034340xxx**.** Available device versions are listed in *Table 1.*

Table 1 Available Device versions of RIS-9160-xx0x

Part No.	Device name Additional device name	Description
34034340000	RIS-9160-1A0M K25104P000000000000	Roadside unit with mounting plate “M”.
34034340001	RIS-9160-1A00 K25104P000000000000	Roadside unit without a mounting plate.
34034340002	RIS-9160-1A0W K25104P000000000000	Roadside unit with mounting adapter “W”.

Audience

This document is addressed to **qualified staff** only. Qualified staff have the appropriate knowledge in the scope of electrical engineering.

Preparations

This Technical Manual shall be carefully read before installation.

Customer specific installation guidelines are not described within this document.

Dimensions

All dimensions used in this document are in metric system except otherwise indicated.

Text Conventions

Visual aids and standard text formats in this manual help the reader to locate and identify information easily.

Typographical formats:

Table 2
Text Formats and their Meaning

Style	Used for
bold	Accentuations
italics	Labelling and cross-references
CAPITAL LETTERS	Acronyms

Important Text Elements

This manual contains specific Caution and Warning statements. These shall be interpreted as follows:

Attention

Attention: This warning indicates that the device may be affected by Electrostatic Discharge. Appropriate precautions must be made to avoid damage to the device.

Caution

Caution: A caution sign indicates concerns about a procedure which may lead to equipment damage or violation of regulatory requirements.

Warning

Warning: indicates a potential danger that requires correct procedures or practices in order to prevent injury to humans or damage to the equipment.

Abbreviations

ACR	Adjacent Channel Rejection
BT	Bluetooth
DL	Downlink direction (Information from RIS-9160)
DSRC	Dedicated Short Range Communication
EIRP	Equivalent Isotropic Radiated Power
GB	Giga Byte
GNSS	Global Navigation Satellite System
GPIO	General Purpose Input or Output
LOS	Line of Sight
LTE	Long Term Evolution, 4th generation cellular communication technology
OBU	On Board Unit
NACR	Non Adjacent Channel Rejection
NLOS	Non Line of Sight
PoE	Power over Ethernet
PPS	Pulse Per Second
RSU	Roadside Unit
RIS	Roadside ITS Station
SSD	Solid State Disk
UL	Uplink direction (Information to RIS-9160)
WAVE	Wireless Access in a Vehicular Environment, a term used by IEEE 1609.x series of standards
WLAN	Wireless Local Area Network
WWAN	Wireless Wide Area Network

Warning to Users in the United States

Local Regulations

The hardware referred to in this document allow selection of frequency bands and transmit power levels that may not comply with the regulatory body that governs spectrum policy where the hardware is being used.

License Required

The operator is required to apply for and obtain a 47 CFR Part 90 geographic area license from the FCC that has specified eligibility requirements to operate this device in the United States (47 CFR Part 90.375). See product label for FCC ID number.

Individual devices have to be registered. Such licenses serve as a prerequisite to registering individual devices located within the licensed geographic area. Licensees must register each installation in the Universal Licensing System (ULS) before operating a 5.9GHz DSRC Roadside Unit (RSU).

For further information about DSRC regulations in the US please refer to

https://www.fcc.gov/

Regulatory Information

Notice

The device versions referred to in this document comply with Part 15 of the FCC Rules. Operation is subject to the following two conditions:

1. This device may not cause harmful interference, and
2. this device must accept any interference received, including interference that may cause undesired operation.

Notice

Changes or modifications made to this equipment not expressly approved by Kapsch may void the FCC authorization to operate this equipment.

Class B Digital Device

Note: This equipment has been tested and found to comply with the limits for a Class B digital device, pursuant to Part 15 of the FCC Rules. These limits are designed to provide reasonable protection against harmful interference in a residential installation. This equipment generates uses and can radiate radio frequency energy and, if not installed and used in accordance with the instructions, may cause harmful interference to radio communications. However, there is no guarantee that interference will not occur in a particular installation. If this equipment does cause harmful interference to radio or television reception, which can be determined by turning the equipment off and on, the user is encouraged to try to correct the interference by one or more of the following measures:

- Reorient or relocate the receiving antenna.
- Increase the separation between the equipment and receiver.
- Connect the equipment into an outlet on a circuit different from that to which the receiver is connected.
- Consult the dealer or an experienced radio/TV technician for help.

Radio Frequency Radiation Exposure Information

This equipment complies with FCC radiation exposure limits set forth for an uncontrolled environment. This equipment should be installed and operated with minimum distance of 20 cm (8 inches) between the radiator and a human body. Failure to do so could result in bodily injury or death.

This transmitter must not be co-located or operating in conjunction with any other antenna or transmitter.

Software Licenses

This product may contain software portions including technologies used under third party license, and are copyrighted. Notices, Terms and Conditions pertaining to third party software are located at

http://www.kapsch.net/us/en/ktc/portfolio/products_and_components/Pages/default.aspx

Safety Instructions

Handling of Cables

Caution: Cables shall not be bent to a smaller radius than specified by the cable manufacturer. For cables listed in this manual the dending radius shall be larger than 2 inches (5cm)

Grounding

Caution: It is necessary to connect the device to ground with a low impedance connection.

Note to GPS System Installer

This reminder is provided to call the systems installer's attention to Section 820.93 of the NFPA 70® National Electrical Code ® 2008 Edition, which provide guidelines for proper grounding and, in particular, specify that the coaxial cable shield shall be connected to the grounding system of the building, as close to the point of cable entry as practical.
Note: This reminder applies when the GPS antenna is installed remote using a coax-cable between the RIS-9160 and the GPS antenna.

Maintenance Instructions

The Roadside ITS Station RIS-9160 need no regular electrical maintenance.

Inspection Instructions

Regular Inspection

Warning: Regular inspection of installed equipment is mandatory and shall be in accordance with the local safety regulations for equipment installed on the roadside.

Environmental Information

Recycling

RIS-9160 equipment set consists of material that can be recycled by specialized companies. Please observe the local regulations regarding the disposal of packaging material and waste electronic equipment.

Environmental Requirements

The device is protected against environmental influences by NEMA 4X (IP67) enclosure. No additional protection measures are required for outdoor installation.

The specified protection class is only provided when each connector is either closed by a mounted accessory (antenna or cable) with the same protection class or when unused, the connector has to be closed with a dedicated plug which is specified within this document.

Transport

The device is shipped packed and each antenna port of the device is protected against dust with a plastic dust protection which must be removed before installation.

Exposure of the device to direct solar radiation may additionally increase the case temperature. If the requirement for acceptable operational temperature range cannot be satisfied an application specific sun cover must be used.

Visual Inspection

Always check the shipment for completeness and possible damage. If the content is incomplete or damaged, a claim should be filed with the carrier immediately and contact your local Kapsch office.

Installation Instructions

For information regarding applications for and installation of the products described in this manual, please see the application notes.

General Information

Definitions

Communication Zone

The size of the communication zone is defined by the area where communication with another device (e.g., OBU) is reliable. The size of the communication zone is mostly influenced by the mounting height and mounting angle of the antennas, the antenna utilized, the transmit power level used and environmental effects e.g. buildings, traffic signs, trees and receiving vehicles communication characteristics (receiver sensitivity, antenna, …) etc..

System Overview

The RIS-9160 implemented in roadside systems supports reliable data exchange with standard (IEEE WAVE or ETSI ITS G5) compliant Onboard Units (OBUs).

Figure 1
Roadside ITS Station RIS-9160

Performance Overview

- Product operates in outdoor and roadside environments
- Weather proof, robust and compact housing

US Version

- IEEE WAVE/802.11p compliant DSRC transceiver RIS-9160
- Compatible with IEEE WAVE/802.11p compliant OBUs

European Version

- ETSI ITS G5 compliant roadside transceiver RIS-9160
- Compatible with ETSI ITS G5 compliant OBUs

System Architecture

The Roadside ITS Station RIS-9160 architecture is optimized for easy and fast installation and commissioning. The applied architecture is used for setups with a minimum of auxiliary equipment needed on the roadside. The device includes all functionality to run IEEE WAVE or ETSI ITS G5 functionality.

Compact Architecture

Scope

The applied architecture has the highest flexibility for different system setups. It can be scaled for different needs of the customer.

System Structure

Common system features:

- GB Ethernet based system interface
- PoE power supply of the device
- Device is internally protected against surges on data and power lines
- GPS antenna interface for positioning and time synchronization
- Two 5.9 antenna interfaces
- LED status indication

Preconfigured optional features:

- Internal mSATA SSD for memory extension
- Internal µSD memory card for memory extension
- Application specific mounting plates

Optional features but not available in the described device family in this document:

- GPIO interface (3x in, 3x out)
- External 24-48V DC supply in addition to or instead of the PoE+ supply.
- WWAN interface
- WLAN interface
- BT interface

Note: All options need to be installed in the production before delivery. The availability of the options is depending on the product roadmap and customer demand.

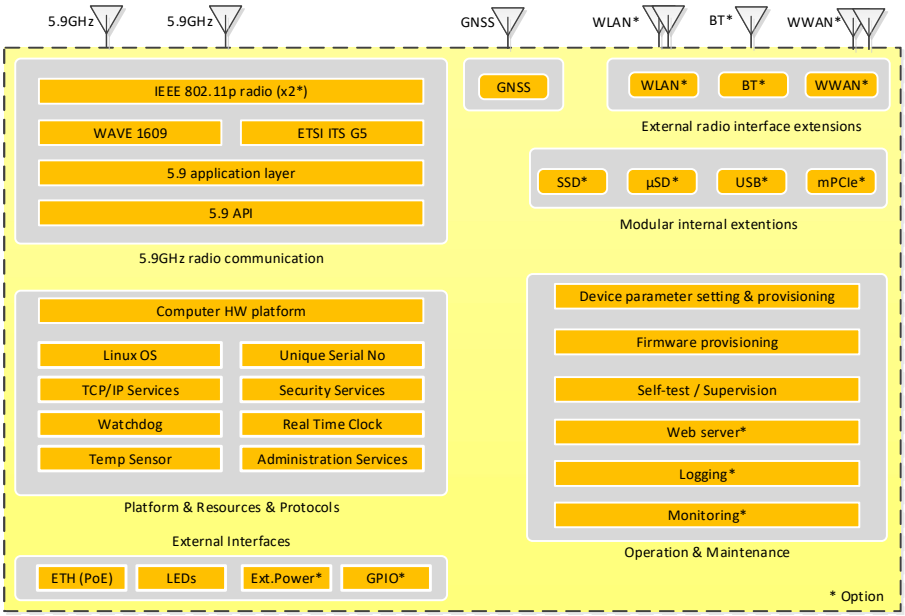

Figure 2 Functional block diagram

System Interfaces

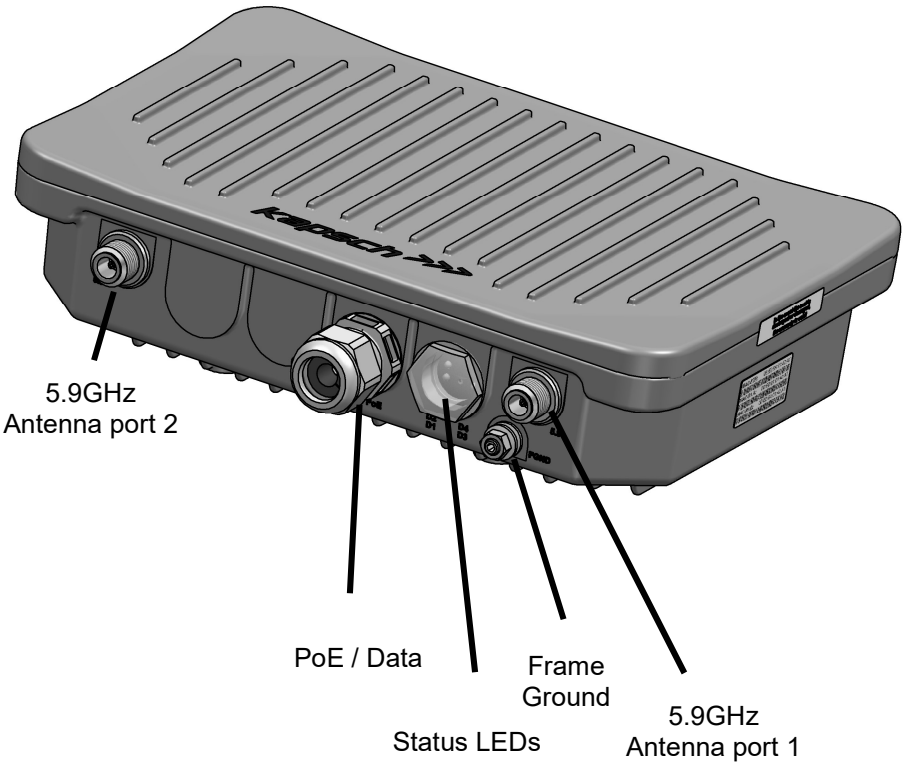

Figure 3 System Interfaces

Figure 4 Auxiliary antenna ports RIS-9160

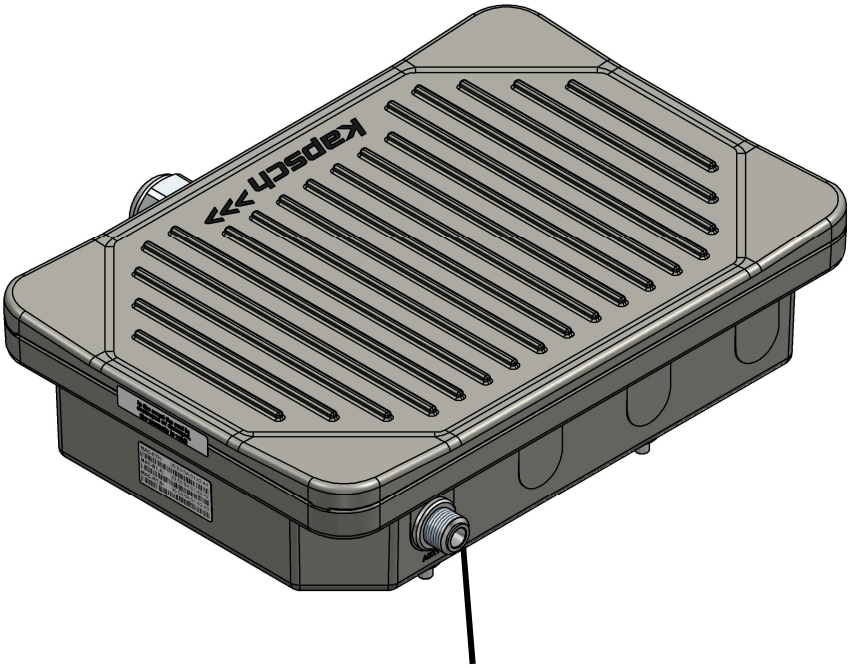

PoE / Data interface

GB Ethernet data interface and also PoE+ power supply input, the external power supply (PoE) is the responsibility of the system integrator and must comply with *IEEE 802.3at requirements*.

PoE/LAN data cable

A shielded Cat-5e cable or better must be used. Max. Length < 300feet (<100m) cable must be qualified for PoE+ usage. Also the local environmental conditions (e.g. UV stability, temperature range) must be considered when choosing the cable.

Note: Cat-5e network cable with a conductor cross-section of AWG 24 (0.22 mm^2) get fast to physical limits, they might get warm - especially when the heat from big cable bundles can dissipate.
Cat-6 or Cat-7A cables with cross sections of AWG 23 (0.26 mm^2) or AWG 22 (0.33 mm2) are due to their lower resistance advantageous.

Status LEDs

Four status LEDs are provided on the bottom side of the device which indicate status information of the RIS-9160. The Led D2 “Power” provides off/green, each other Led provides the three colors green, amber, red.

D1 General Status

D2 Power

D3 Application specific indication

D4 Application specific indication

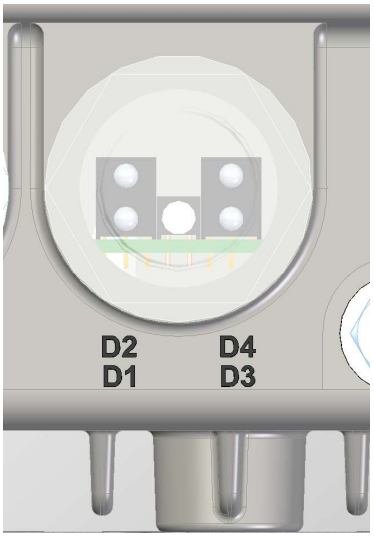

Figure 5
Position of the Status LEDs

Table 3
D1 – General Status LED

Color	Status	Description
Off	No operation	Power off
Green	Operation ok	Device is fully operational.
Green blinking	Start	Device is doing a start, full operation is not established yet in this state.
Amber	SW install	Software installation is in progress. Full operation not established.
Red	Fault	Device is in a faulty state, operation is limited or not provided depending on the kind of fault.

Table 4
D2 – Power LED

Color	Status	Description
Off	No power	Internal power supply is not ok, power off.
green	Power ok	Internal power supply is ok.

Note: The indications of D3 and D4 are described in the appropriate software installation manuals.

5.9 Antenna Ports

The RIS-9160 is equipped with two antenna ports for 5.9GHz communication, so external antennas can be applied.
“5.9GHz Antenna port 1” is internally connected to the 5.9 Radio 1, port 1.
“5.9GHz Antenna port 2” is internally connected to the 5.9 Radio 1, port 2

GNSS Antenna Port

The RIS-9160 is equipped with an internal GNSS receiver. An antenna port for receiving of position and time information is located on the top side of the device. An external GNSS antenna can directly be applied.

“Auxiliary Antenna Port 1” is used as GNSS antenna port.

Antenna Port Protection

If an antenna port is not used it is mandatory to secure the connector with its appropriate closure, see chapter .

Caution: Ensure that each antenna port is protected in the correct way whenever changing the usage of a RIS-9160

Product versions

Available versions of the product family RIS-9160-xA0x 34034340xxx:

Table 5 RIS-9160 device versions

Part No.	Device name Additional device name	Description
34034340000	RIS-9160-1A0M K25104P000000000000	Roadside unit with PoE+ supply, one 5.9GHz radio unit with dual channel capability, GNSS interface Mounting plate: “M”. CPU: INTEL-ATOM E3825 1,33GHz, 1GB RAM ECC, 4GB eMMC mSATA SSD: none µSD memory card: none
34034340001	RIS-9160-1A00 K25104P000000000000	Roadside unit with PoE+ supply, one 5.9GHz radio unit with dual channel capability, GNSS interface. mounting plate: none. CPU: INTEL-ATOM E3825 1,33GHz, 1GB RAM ECC, 4GB eMMC mSATA SSD: none µSD memory card: none
34034340002	RIS-9160-1A0W K25104P000000000000	Roadside unit with PoE+ supply, one 5.9GHz radio unit with dual channel capability, GNSS interface. Mounting plate “W”. CPU: INTEL-ATOM E3825 1,33GHz, 1GB RAM ECC, 4GB eMMC mSATA SSD : none µSD memory card: none

Installation

The described mounting applies to RIS-9160 specified in this documentation.

Warning: Installation of the RIS-9160 product must be performed by trained Kapsch approved staff.

Mounting

In general the following rules apply:

- The omni-directional 5.9GHz antenna should point against the road (ground).
- Typical installation height for RIS-9160 is 6 - 8 meters.
- Cable outlet LAN heading oriented downwards.

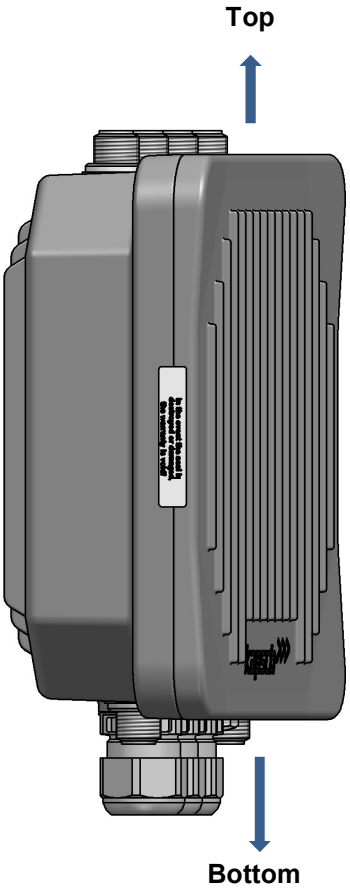

Warning: When mounting the device to a bridge, a gantry or a wall the appropriate safety regulations must be followed.

Device without a mounting plate

The bare RIS-9160-xxx**0** variants like part number 34034340001 are delivered without a mounting plate but provide four M6-screws on the rear side for mounting.

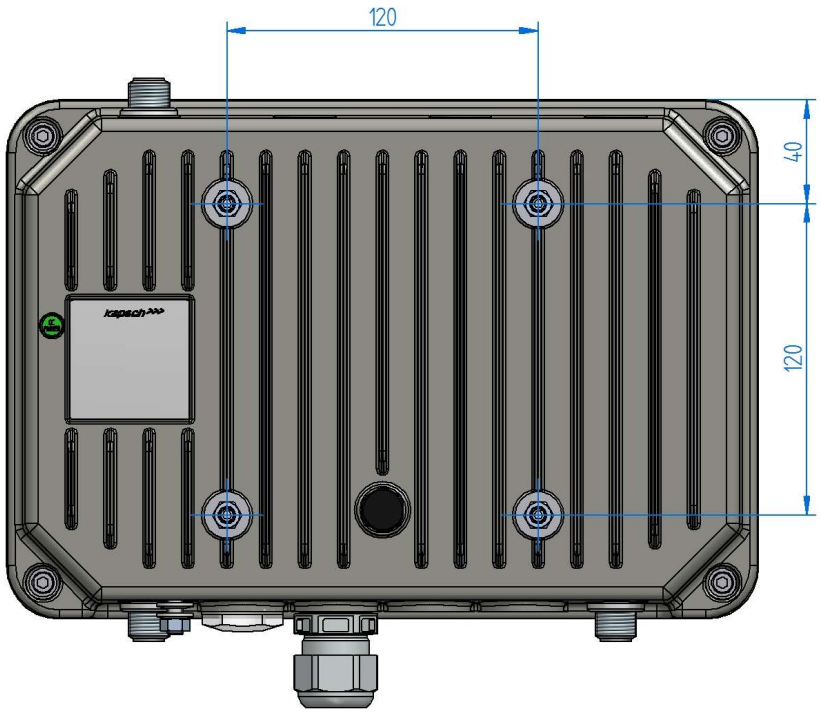

Figure 6 RIS-9160 without a mounting plate

Device with mounting plate “M”

The variants RIS-9160-xxx**M** like part number 34034340000 are already equipped with a mounting plate. The mounting plate enables mounting into the mounting bracket 34017690200 without tools (see chapter “Mounting Bracket for RIS-9160”). It provides an additional connection of the Frame ground and also the possibility to mount a sunshield on the outer four drill holes.

Figure 7
RIS-9160 with mounting plate “M” – rear view

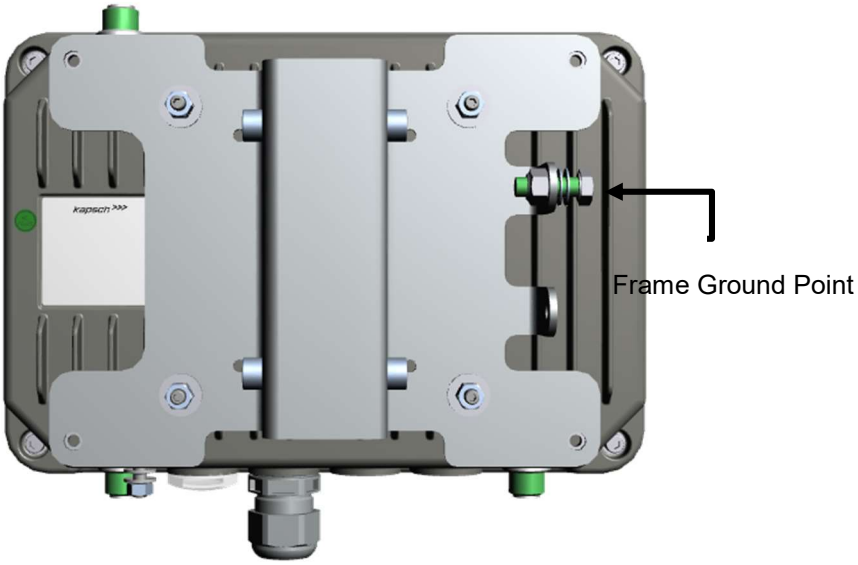

Figure 8 RIS-9160 with mounting plate “M” – side view

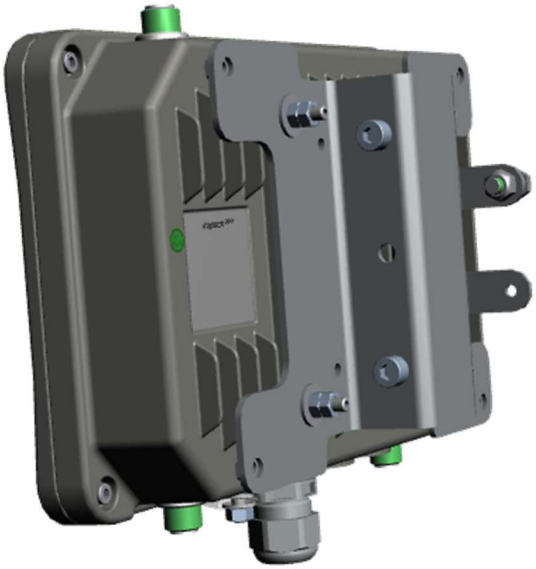

Device with mounting adapter “W”

The variants RIS-9160-xxx**W** like part number 340340002 are already equipped with the mounting adapter “W” on the rear side.

Figure 9 RIS-9160 with Mounting adapter „W”

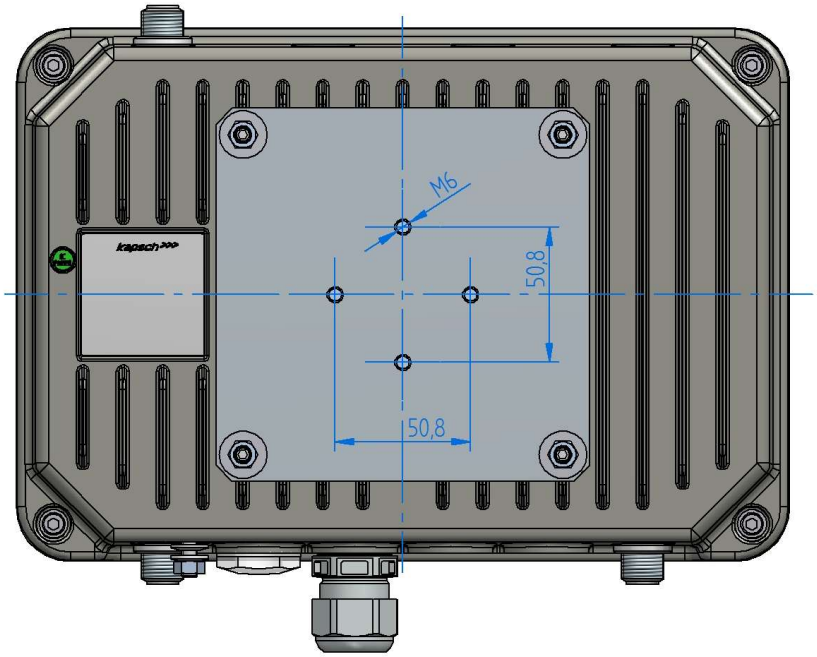

Electrical Installation

Recommendation for Cabling

Remark: The cables must be protected against mechanical damage. Optimal protection offers a protective cable guard. Cables must be fixed with cable strap in such a way that the maximum protection against mechanical damage is provided.

LAN/PoE System-Connector

Table 6
LAN/PoE connector signals

Connector	Pin	Signal	Description	ALT A	ALT B
RJ45 8-pin Socket (female) 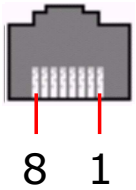	1	D1+	Data pair 1, plus pole, bidirectional	V+	
	2	D1-	Data pair 1, minus pole, bidirectional	V+	
	3	D2+	Data pair 2, plus pole, bidirectional	V-	
	4	D3+	Data pair 3, plus pole, bidirectional		V+
	5	D3-	Data pair 3, minus pole, bidirectional		V+
	6	D2-	Data pair 2, minus pole, bidirectional	V-	
	7	D4+	Data pair 4, plus pole, bidirectional		V-
	8	D4-	Data pair 4, minus pole, bidirectional		V-
	Metalized housing		Internally AC coupled to FGND using a 100pF capacitor		

V+/- positive/negative pole of the PoE DC power input, Dx+/- Data line

Caution: The earthing of the cable shield must be established on the feed side because there is internally NO low resistant DC connection provided between the connected cable shield and the Frame Ground of the device.

Ethernet PoE IEEE 802.3-2012 Phantom power alternative A or B are supported for 100/100/1000 Base-T

System cable connection

The system connector concept of the RIS-9160 ensures a stable and waterproof connection of the system cables with the device. To ensure this the cables have to be connected as described in this section.

Preparation

1. Check if the Connector assembly parts according Table 7 are complete.

	Cable gland – fitting with original gasket inserted Material: Polyamide Key width SW: 29mm Inner Diameter: max. 17mm
	Cable gland - cap nut Material: Polyamide Key width SW: 29mm Inner Diameter: max. 17mm
	Rubber gasket size A Material: EPDM Cable Diameter: STP 7,0-9,0 mm
	Rubber gasket size B Material: EPDM Cable Diameter: STP 4,0-6,5 mm

Table 7 Connector assembly parts

2. Remove the original gasket out of the cable gland fitting according Figure 10.

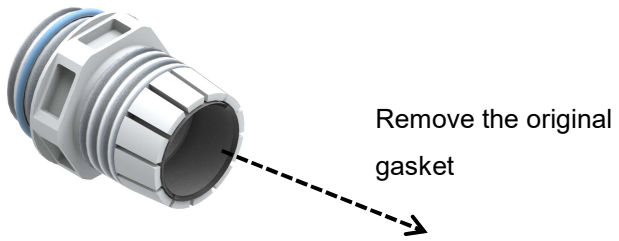

Figure 10 Remove original gasket

3. Check if the Sealing is placed correctly on the fitting according Figure 11

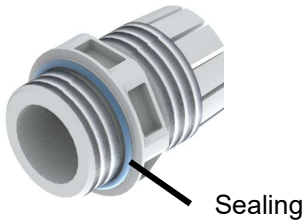

Figure 11 Position of the sealing

4. Prepare the correct size A or size B of the rubber gasket depending on the cable diameter.
5. Push the cable carefully through the cap nut and cable gland fitting according Figure 12. Ensure that the locking mechanism remains intact.
6. Attach the appropriate rubber gasket size A or size B depending on the cable diameter according Figure 12 so that the profiled side of the gasket is oriented towards the fitting !

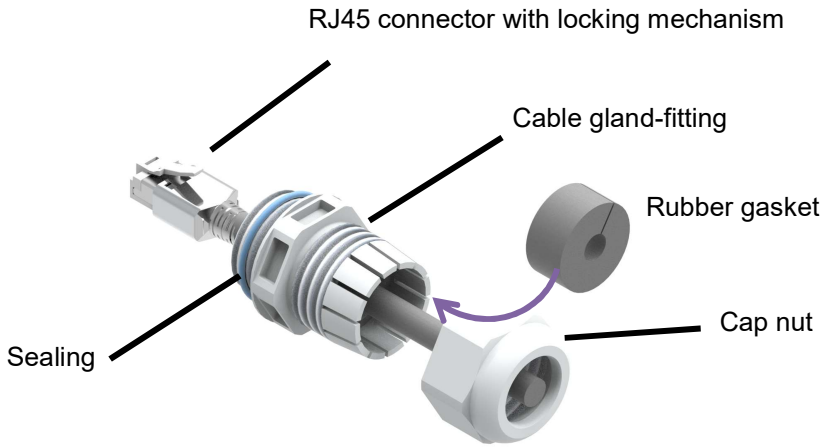

Figure 12 Cable Connection Mounting Details

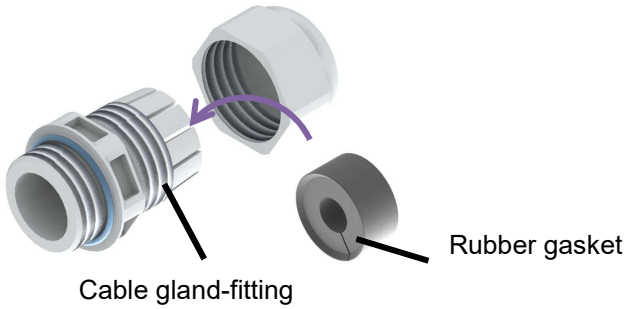

Figure 13 Direction of the Rubber Gasket

7. Check the correct direction of the rubber gasket which is also shown in Figure 13 to ensure waterproofness of the connection !
8. Connect the RJ45 connector to the system connector of the RIS-9160 and ensure that the locking mechanism of the connector is fixed.
9. Attach the cable gland - fitting carefully to the threaded whole in the RIS-9160, ensure that the thread fits smoothly and fasten the fitting with a torque of **10 Nm.**
10. Slide the rubber gasket into the slot of the fitting.
11. Move the cap-nut across the fitting.
12. Fasten the cap-nut to the fitting with a torque of **4 Nm.**

Attention: Overpowering will irreversibly destroy the Polyamide thread!
Too less torque will not ensure rated IP Class.

Figure 14
RIS-9160 with connected system cable

Product Specifications

Mechanical Characteristics

Dimensions [LxWxH] without bracket	11.5 in x 7.9 in x 3.07 in (290mm x 200mm x 78mm)
Weight without bracket	<6.6 pounds (~3 kg)
Material of housing	Aluminum alloy die casting

Electrical Characteristics and Conditions

PoE/LAN system interface	
Rated Input Voltage	PoE Nom. 48V DC (IEEE 802.3at)
Input Voltage Range	Min: 36V DC Max: 57V DC
POE device classification	Type 2, PoE+, max. 25.5 W over two pairs
Supported POE power modes:	Mode A (via pins 1-2 / 3-6) Mode B (via pins 4-5 / 7-8) 4 pair mode
Galvanic insulation	2250V AC for 1 minute
Protection	Internal Surge protection
LAN Physical Interface	10/100/1000 BASE – T

Power consumption	
RIS-9160-1A0x 34034340xxx,	≤ 14W

Platform Specification	
Processor	1,33 GHz, 64 Bit, INTEL ATOM E3825 dual-core
Basic Memory config.	1GB RAM ECC / 4GB eMMC SLC
Optional memory config	Up to 8GB RAM ECC, up to 64 GB eMMC SLC/MLC
Operating System	Linux
Optional SSD:	mSATA-SSD, iSLC, 6GB/s, 8-256 GB
Optional µSD card:	Micro SD up to 128GB

RF Interfaces

5.9 Radio 1	
Frequency range	5.860GHz - 5.920GHz
Channels	172,174, 176,178,180,182,184
Channel Bandwidth	10MHz
Data Rates	6MBit/s

Antenna Connector	Type N female
Output power	≤ 20dBm (CFR 47 Part 90 Class C)
Output power Adjustment range	0dBm .. +20dBm in 1dB steps
Receiver Sensitivity	-92dBm @ 6Mbps (typ.)
ACR/NACR	Enhanced

GNNS Interface	
System support	Multi GNSS
Antenna Connector	Type N female
Antenna Type	GPS Antenna, passive or active supply 3,3V for active antenna

LED Interface	
Indications	1 x green LED (Power indication) 1 x 3-color LED (Status indication) 2 x 3-color LEDs (SW defined)

Environmental Conditions

Environmental Conditions	
Temperature (operation)	-40°C ...+74°C -40 F … +165,2 F

This temperature range does not consider increase of temperature due to exposure to solar irradiation. It's mandatory to use the optional sun cover if the case temperature exceeds this limit due to solar irradiation.

Temperature (storage)	-40°C ...+85°C -40F … 185F
IEC protection rating	NEMA 4X IP67
Oscillation sinus (operation)	EN60068-2-6 Fc (2008-12) 1-9Hz 3,5mm 10-200Hz, 10 m/s2
Oscillation random (operation)	EN60068-2-64 Fc (2008-12) 100-200Hz / -7dB/octave 200-2000Hz / 1m2/s3 10-100Hz / 5m2/s3
Shock (operation)	EN60068-2-27 Ea(2010-04) 150m/s² / 6ms
MTBF	100.000h according to BELLCORE TR-TSY-000332

Product Marking

FCC-ID: XZU9160

(FCC will be available after conclusion of certification / listing)

Mechanical Dimensions

All dimensions are given in mm.

Figure 15 Dimensions of RIS-9160 without mounting plate

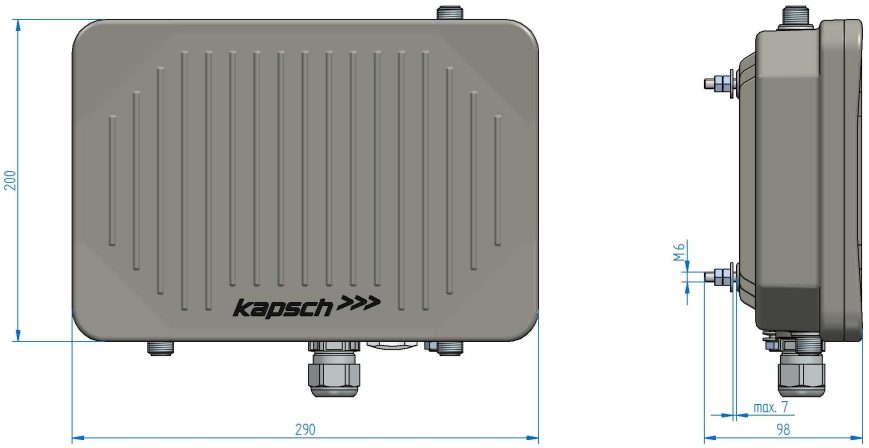

Figure 15 shows the dimensions of the RIS-9160-xxx**0** device versions like part nr. 34034340001 without mounting plate where four M6 metrical screws are provided for mounting on the rearside of the device. Those screws are already premounted. in the factory.

Figure 16 Dimensions of RIS-9160 with mounting plate "M"

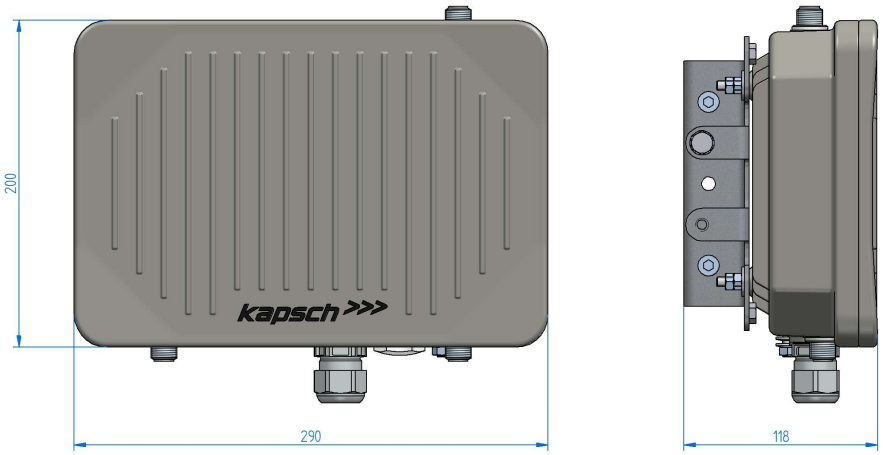

Figure 16 shows the dimensions of the RIS-9160-xxx**M** device versions with mounting plate "M" like part nr. 34034340000.

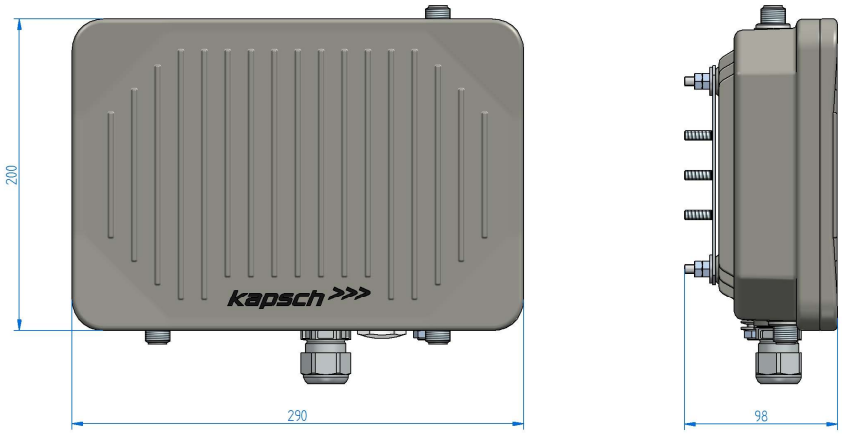

Figure 17 Dimensions of RIS-9160 with mounting adapter "W"

Figure 17 shows the dimensions of the RIS-9160-xxx**W** device versions like part nr. 34034340002 with mounting adapter "W".

Conformity

Standards

Table 8 Standards

Ref.	Standard	Description
[1]	IEEE 802.11™2012	IEEE Standard for Information technology— Telecommunications and information exchange between systems— Local and metropolitan area networks— Specific requirements Part 11: Wireless LAN Medium Access Control (MAC) and Physical Layer (PHY) Specifications
[2]	IEEE 802.11™p	IEEE Standard for Information technology— Telecommunications and information exchange between systems— Local and metropolitan area networks— Specific requirements Part 11: Wireless LAN Medium Access Control (MAC) and Physical Layer (PHY) Specifications Amendment 7: Wireless Access in Vehicular Environments

Ref.	Standard	Description
[3]	IEEE 1609.4™ 2016	Draft Standard for Wireless Access in Vehicular Environments (WAVE) – Multi-channel Operation
[4]	IEEE 1609.3™ 2016	Draft Standard for Wireless Access in Vehicular Environments (WAVE) – Networking Services
[5]	IEEE 1609.12™ 2016	Standard for Wireless Access in Vehicular Environments (WAVE) – Identifier Allocations
[6]	47 CFR Part 2	Code of Federal Regulations, Title 47, Part 2 (47 CRF 2) Part 2 – Frequency allocations and radio treaty matters; General rules and regulations
[7]	47 CFR Part 15	Code of Federal Regulations, Title 47, Part 15 (47 CFR 15) Part 15 – Radio Frequency Devices
[9]	47 CFR Part 90	Code of Federal Regulations, Title 47, Part 90 (47 CRF 90) Part 90 – Private Land Mobile Services
[10]	NEMA Standards (NEMA 250-2008)	NEMA Standard for Enclosures for Electrical Equipment
[11]	IEC 62368-1	Audio/video, information and communication technology equipment – Part 1: Safety requirements
[11a]	IEC 60950-22	International Electrotechnical Com-mission – Safety of Information Technology Equipment-Part 22: Equipment installed outdoors
[12]	EN 302 571 V2.1.1 (2017-02)	Intelligent Transport Systems (ITS); Radiocommunications equipment operating in the 5 855 MHz to 5 925 MHz frequency band; Harmonised Standard covering the essential requirements of article 3.2 of Directive 2014/53/EU
[13]	EN 301 489-1 V2.2.0	ElectroMagnetic Compatibility (EMC) standard for radio equipment and services; Part 1: Common technical requirements; Harmonised Standard covering the essential requirements of article 3.1(b) of Directive 2014/53/EU and the essential requirements of article 6 of Directive 2014/30/EU
[14]	EN 301 489-3 V2.1.1	ElectroMagnetic Compatibility (EMC) standard for radio equipment and services; Part 3: Specific conditions for Short-Range Devices (SRD) operating on frequencies between 9 kHz and 246 GHz; Harmonised standard covering the essential requirements of article 3.1(b) of Directive 2014/53/EU

Ref.	Standard	Description
[15]	EN 62 311: 2008	Assessment of electronic and electrical equipment related to human exposure restrictions for electromagnetic fields (0 Hz - 300 GHz)

Statement of Conformity

Information on Conformity of Products

The following information applies to the product listed in Table 1.

Declaration

Hereby, Kapsch TrafficCom AG declares that the products listed in this document are in compliance with the essential requirements and all other relevant provisions of Directive 2014/53/EU.

The Declaration of Conformity is available for download from https://www.**kapsch**.net/ktc/Portfolio/Products/RF-Field-Products/5-9-GHz-WAVE-DSRC-Transceivers

For further information please contact us.

Address

Kapsch TrafficCom AG Am Europlatz 2
A-1120 Vienna
Tel.: +43 (0)50 811 0
Email: ktc.info@kapsch.net

Optional Equipment

Mounting Bracket for RIS-9160

The counterpart of the mounting plate “M” is the mounting bracket with locking, Kapsch part number 34017690200.

Figure 18
Mounting Bracket with safety wire

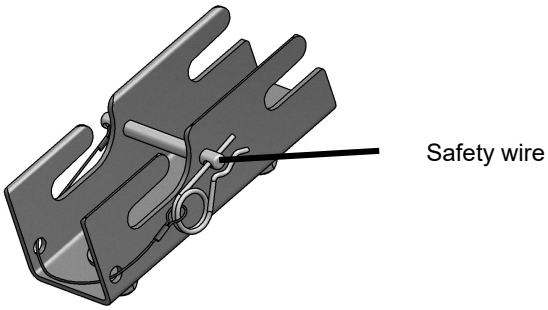

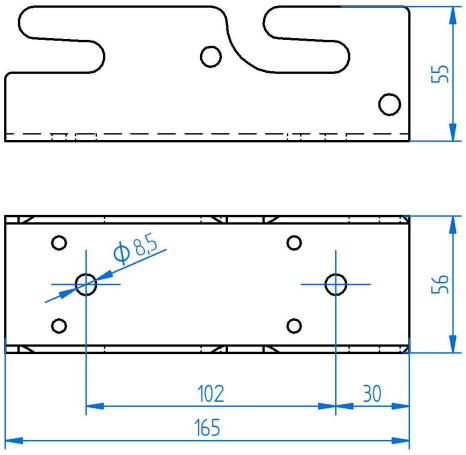

Figure 19
Dimensions and drilling plan of the Mounting Bracket

To protect the device from unintentionally slipping out of the mounting bracket it is secured with the Safety Wire. The Safety Wire itself is protected against loss or drop-down as it is attached to the bracket through additionally dedicated security holes. Material: Stainless steel

Note: The outline of the safety wire can slightly differ from the shown one in Figure 18.

Protection caps and termination plugs

The protection caps and the RF terminations are delivered depending on customer configuration and demand along with each RIS-9160 or can be ordered separately.

Table 9
Protection caps and termination plugs

Termination type	Description	Kapsch Part No.
RF termination (50Ohm)	RF termination plug, N male, 50R, 2W. **Note**: IP66 protection class only !	76000046410
N connector protection cap	N-Connector protection cap, no RF termination, 130 Ncm rated torque.	76000066660
M25x1,5 cap and sealing	Cap Sealing **Note:** The specified protection class of IP67 is only ensured when both cab and sealing are mounted !	76000066560 76000078180