Test Report
20-1-0009201T04a

DAkkS Deutsche Akkreditierungsstelle
D-PL-12047-01-01
D-PL-12047-01-03
D-PL-12047-01-04

Number of pages:	37	**Date of Report:**	2021-Mar-08
Testing company:	CETECOM GmbH Im Teelbruch 116 45219 Essen Germany Tel. + 49 (0) 20 54 / 95 19-0 Fax: + 49 (0) 20 54 / 95 19-150	**Applicant:**	Prodrive Technologies B.V.
Product: **Model:**	**Motor drive** **Carrier Controller**		
FCC ID:	Y2ICCMUL2	**IC:**	9389A-CCMUL2
Testing has been carried out in accordance with:	**Title 47 CFR, Chapter I** **FCC Regulations, Subchapter A** Subpart C: §15.247 (DTS) , **RSS-247, Issue 2 (DTS)** **RSS-Gen., Issue 5** Deviations, modifications or clarifications (if any) to above mentioned documents are written in each section under "Test method and limit"		
Tested Technology:	2.4GHz WLAN (IEEE 802.11)		
Test Results:	☒ **The EUT complies with the requirements in respect of all parameters subject to the test.** The test results relate only to devices specified in this document		

Signatures:

Ninovic Perez
2021.03.08
10:21:11 +
01'00'

Digital signiert von: patrick.marzotko@cetecom.com
Name: CN = patrick.marzotko@cetecom.com
Datum: 2021.03.08 07:08:27 +01'00'

Dipl.-Ing. Ninovic Perez	Patrick Marzotko
Test Lab Manager	Test manager
Authorization of test report	Responsible of test report

Table of Contents

Table of Annex....3
1.1 Disclaimer and Notes....4
1.1. Summary of Test Results....5
1.2. Summary of Test Methods....6
2.1 Identification of the Testing Laboratory....7
2.2 General limits for environmental conditions....7
2.3 Test Laboratories sub-contracted....7
2.4 Organizational Items....7
2.5 Applicant's details....7
2.6 Manufacturer's details....7
2.7 EUT: Type, S/N etc. and short descriptions used in this test report....8
2.8 Auxiliary Equipment (AE): Type, S/N etc. and short descriptions....8
2.9 Connected cables....8
2.10 Software....9
2.11 EUT set-ups....9
2.12 EUT operation modes....10
3.1 General Data of Main EUT as Declared by Applicant....11
3.2 Detailed Technical data of Main EUT as Declared by Applicant....12
3.3 Worst case identification....12
3.4 Modifications on Test sample....12
4.1 Duty-Cycle....13
4.2 RF output power....14
4.3 Power spectral density....17
4.4 Minimum Emission Bandwidth 6 dB....19
4.5 Occupied Channel Bandwidth 99%....20
4.6 Emissions in non-restricted frequency bands....21
4.7 Radiated field strength emissions below 30 MHz....23
4.8 Radiated field strength emissions 30 MHz – 1 GHz....27
4.9 Radiated field strength emissions above 1 GHz....29
4.10 Radiated Band-Edge emissions....31
4.11 Results from external laboratory....33
4.12 Opinions and interpretations....33
4.13 List of abbreviations....33

Table of Annex			
Annex No.	**Contents**	**Reference Description**	**Total Pages**
Annex 1	Test result diagrams	**CETECOM_TR20-1-0009201T04a-A1**	92
Annex 2	Internal photographs of EUT	**Please refer to applicant's documentation**	--
Annex 3	External photographs of EUT	**CETECOM_TR20-1-0009201T04a-A3**	13
Annex 4	Test set-up photographs	**CETECOM_TR20-1-0009201T04a-A4**	6
The listed attachments are separate documents.			

1 General information

1.1 Disclaimer and Notes

The test results of this test report relate exclusively to the test item specified in this test report as specified in chapter 2.7. CETECOM does not assume responsibility for any conclusions and generalizations drawn from the test results with regard to other specimens or samples of the type of the equipment represented by the test item.
The test report may only be reproduced or published in full. Reproduction or publication of extracts from the report requires the prior written approval of CETECOM.
The testing service provided by CETECOM has been rendered under the current "General Terms and Conditions for CETECOM".
CETECOM will not be liable for any loss or damage resulting from false, inaccurate, inappropriate or incomplete product information provided by the customer.
Under no circumstances does the CETECOM test report include any endorsement or warranty regarding the functionality, quality or performance of any other product or service provided.
Under no circumstances does the CETECOM test report include or imply any product or service warranties from CETECOM, including, without limitation, any implied warranties of merchantability, fitness for purpose, or non-infringement, all of which are expressly disclaimed by CETECOM.
All rights and remedies regarding vendor’s products and services for which CETECOM has prepared this test report shall be provided by the party offering such products or services and not by CETECOM.
In no case this test report can be considered as a Letter of Approval.

This test report is electronically signed and valid without handwritten signature. For verification of the electronic signatures, the public keys can be requested at the testing laboratory.

The test report must always be reproduced in full; reproduction of an excerpt only is subject to written approval of the testing laboratory. The documentation of the testing performed on the tested devices is archived for 10 years at CETECOM.

Also we refer on special conditions which the applicant should fulfill according §2.927 to §2.948, special focus regarding modification of the equipment and availability of sample equipment for market surveillance tests.

1.1. Summary of Test Results

The EUT integrates a 2.4 GHz WLAN transmitter. Other implemented wireless technologies were not considered within this test report.

Test case	Reference Clause FCC ☒	Reference Clause ISED ☒	Page	Remark	Result
Duty-Cycle	§15.35(c)	RSS-Gen Issue 5, §8.2	10	-	PASSED
Minimum Emission Bandwidth 6 dB	§15.247 5.2(a)	RSS-247, § 5.2(a) RSS-Gen Issue 5,: § 6.7	13	-	PASSED
Occupied Channel Bandwidth 99%	2.1049(h)	RSS-Gen Issue 5, § 6.7	14	-	PASSED
RF output power	§15.247(b)(3)	RSS-247, § 5.4(d)	11	-	PASSED
Transmitter Peak output power radiated	§15.247(b)(4)(c)(i)	RSS-247, § 5.4(d)	--	NP	-
Emissions in non-restricted frequency bands	§15.247(d)	RSS-247, § 5.5	16	-	PASSED
Radiated Band-Edge emissions	§15.205(b) §15.247(d)	RSS-Gen: Issue 5 §8.9, §8.10 RSS-247, § 5.5	24	-	PASSED
Power spectral density	§15.247(e)	RSS-247, § 5.2(b)	12	-	PASSED
Radiated field strength emissions below 30 MHz	§15.205(a) §15.209(a)	RSS-Gen: Issue 5 §8.9 Table 6	18	-	PASSED
Radiated field strength emissions 30 MHz – 1GHz	§15.209 §15.247(d)	RSS-Gen: Issue 5 §8.9 Table 5 RSS-247, § 5.5	20	-	PASSED
Radiated field strength emissions above 1 GHz	§15.209(a) §15.247(d)	RSS-Gen: Issue 5: §8.9 Table 5+7 RSS-247, § 5.5	22	-	PASSED
AC-Power Lines Conducted Emissions	§15.207	RSS-Gen Issue 5: § 8.8, Table 4	-	NP	-

PASSED	The EUT complies with the essential requirements in the standard.
FAILED	The EUT does not comply with the essential requirements in the standard.
NP	The test was not performed by the CETECOM Laboratory.
NT	Not tested
N/A	Not applicable

*The calculation of the measurement uncertainty shows compliance with the "maximum measurement uncertainties" of the tested standard and therefore for result evaluation the stated uncertainties will not be additionally added to the measured results.

1.2. Summary of Test Methods

Test case	Test method
Duty-Cycle	ANSI 63.10:2013, §11.6(b)
Minimum Emission Bandwidth 6 dB	ANSI C63.10:2013, §6.9.2, §11.8
Occupied Channel Bandwidth 99%	ANSI C63.10:2013, §6.9.3
RF output power	ANSI C63.10:2013, §11.9
Power spectral density	ANSI C63.10:2013, §11.10
Emissions in non-restricted frequency bands	ANSI C63.10:2013, §11.11, §6.10.5
Radiated Band-Edge emissions	ANSI C63.10-2013; “Marker-Delta method”, §6.10.5, §11.13
Transmitter Peak output power radiated	Result calculated with measured conducted RF-power value and stated/measured antenna gain for band of interest
Radiated field strength emissions below 30 MHz	ANSI C63.10-2013 §6.3, §6.4
Radiated field strength emissions 30 MHz- 1 GHz	ANSI C63.4-2014 §8.2.3, ANSI C63.10-2013 §6.3, § 6.5
Radiated field strength emissions above 1 GHz	ANSI C63.4-2014 §8.3, ANSI C63.10-2013 §6.3, § 6.6
AC-Power Lines Conducted Emissions	ANSI C63.4-2014 §7, ANSI C63.10-2013 § 6.2

And reference also to Test methods in KDB558074

2 Administrative Data

2.1 Identification of the Testing Laboratory

Company name:	CETECOM GmbH
Address:	Im Teelbruch 116 45219 Essen - Kettwig Germany
Responsible for testing laboratory:	Ninovic Perez
Accreditation scope:	DAkkS Webpage
Test location:	CETECOM GmbH; Im Teelbruch 116; 45219 Essen - Kettwig

2.2 General limits for environmental conditions

Temperature:	22±2 °C
Relative. humidity:	45±15% rH

2.3 Test Laboratories sub-contracted

Company name:	-

2.4 Organizational Items

Order No.:	1
Responsible test manager:	Patrick Marzotko
Receipt of EUT:	2020-Nov-12
Date(s) of test:	2021-Jan-05 – 2021-Feb-18
Version of template:	14.5

2.5 Applicant's details

Applicant's name:	Prodrive Technologies B.V.
Address:	Science Park Eindhoven 5501 5692 EM Son Netherlands
Contact Person:	Willem van Helmond
Contact Person's Email:	willem.van.helmond@prodrive-technologies.com

2.6 Manufacturer's details

Manufacturer's name:	See applicant's details
Address:	See applicant's details

2.7 EUT: Type, S/N etc. and short descriptions used in this test report

Short description*)	PMT Sample No.	Product	Model	Type	S/N	HW status	SW status
EUT 01	20-1-00092S16_C01	Motor drive	Carrier Controller	CCM-IO-ETH, UL	n/a	6752-1600-1402	SW: 6752-1400-2409 FW: 6752-1400-2807

*) EUT short description is used to simplify the identification of the EUT in this test report.

2.8 Auxiliary Equipment (AE): Type, S/N etc. and short descriptions

Short description*)	PMT Sample No.	Auxiliary Equipment	Type	S/N	HW status	SW status
AE 01	20-1-00092S05_C01	Power Supply	-	-	-	-
AE 02	20-1-00092S02_C01	Laptop	Latitude 5480	3026RN2	-	-
AE 03	20-1-00092S04_C01	Laptop Power Supply	DA130PE1-00	-	-	-
AE 04	20-1-00092S10_C01	Antenna	-	-	-	-
AE 05	20-1-00092S11_C01	Antenna	-	-	-	-

*) AE short description is used to simplify the identification of the auxiliary equipment in this test report.

2.9 Connected cables

Short description*)	PMT Sample No.	Cable type	Connectors	Length
CAB 01	20-1-00092S06_C01	Power	-	-
CAB 02	20-1-00092S07_C01	-	-	-
CAB 03	20-1-00092S08_C01	Antenna	-	-
CAB 04	20-1-00092S09_C01	Ethernet	-	-
CAB 05	20-1-00092S15_C01	Ethernet	-	-
CAB 06	20-1-00092S17_C01	Antenna	-	-
CAB 07	20-1-00092S20_C01	-	-	-
CAB 08	20-1-00092S21_C01	-	-	-
CAB 09	20-1-00092S22_C01	-	-	-
CAB 10	20-1-00092S23_C01	-	-	-

*) CAB short description is used to simplify the identification of the connected cables in this test report.

2.10 Software

Via terminal tool **Putty** installed on AE 02 the right mode was set up with help of special commands:

4. RF test commands

Setup for RX mode
```
killall -HUP wpa_supplicant
ifconfig wlan0 down
calibrator wlan0 plt power_mode on
calibrator wlan0 wl18xx_plt tune_channel 6 0 0
calibrator wlan0 wl18xx_plt start_rx EC:24:B8:4B:67:A2 00:00:01:02:03:04
calibrator wlan0 wl18xx_plt start_rx EC:24:B8:4B:67:A2 00:00:01:02:03:04
```

Setup Tx mode (from ~/ directory (cd ~):
./test_tx_2g4 $channel $power $rate $packetsize $delay
For example:
./test_tx_2g4
Will use the following default settings. The order defines the variable. (Channel is also 1st, power 2nd etc.)
Channel: 1
Power: 16125
Rate: 12
Packetsize: 3000
Delay: 400
Example 2:
./test_tx_2g4 8 8125
This will use the following settings:
Channel: 8
Power: 8125
Rate: 12
Packetsize: 3000
Delay: 400

To stop the TX test run:
./stop_tx

This runs the following commands Stop tx mode:
```
calibrator wlan0 wl18xx_plt stop_tx
calibrator wlan0 plt power_mode off
ifconfig wlan0 up
```
More Information available here:
https://processors.wiki.ti.com/index.php/WL18xx
https://processors.wiki.ti.com/index.php/WL18xx_RX_Testing
https://processors.wiki.ti.com/index.php/WL18xx_TX_Testing

2.11 EUT set-ups

set-up no.*)	Combination of EUT and AE	Description
1	EUT 01 + AE 01-05 + CAB 01-10	Used for Radiated measurements
2	EUT 01 + AE 01-05 + CAB 01 + CAB 09	Used for Conducted measurements

*) EUT set-up no. is used to simplify the identification of the EUT set-up in this test report.

2.12 EUT operation modes

EUT operating mode no.*)	Operating modes	Additional information
op. 1	WLAN_TX-Mode	With help of special test firmware TX-mode was set-up. We refer to applicants information/papers for details about necessary commands.

*) EUT operating mode no. is used to simplify the test report.

3 Equipment under test (EUT)

3.1 General Data of Main EUT as Declared by Applicant

Product name	Motor drive		
Kind of product	Carrier controller		
Firmware	☐ for normal use	☒ Special version for test execution	
	☐ AC Mains		
	☒ DC Mains	48 V DC	
	☐ Battery		
Operational conditions	T_{nom} = +21 °C	T_{min} = 0 °C	T_{max} = +45 °C
EUT sample type	**Pre-Production**		
Weight	-		
Size [LxWxH]	-		
Interfaces/Ports	-		
For further details refer Applicants Declaration & following technical documents			
For further details regarding radio parameters, please refer to IEEE802.11 Specification			

3.2 Detailed Technical data of Main EUT as Declared by Applicant

Frequency Band	2.4 GHz ISM Band (2400 MHz - 2483.5 MHz)		
MIMO	☐		
Frequency | Channel | B.W. (USA bands only)	☒ WLAN 2.4 GHz 802.11b g n (SISO)	Ch 1 | 2 | 3| 4 | 5 | 6 | 7 Ch. 8| 9| 10 | 11 | 12| 13	Bandwidth 20 MHz
	☐ WLAN 2.4 GHz 802.11n (SISO)	Ch 3| 4 | 5 | 6 | 7| 8| 9 | 10 | 11	Bandwidth 40 MHz
802.11b – Mode OFDM Modulation | Data Rates	☒ DBPSK | 1 Mbps ☒ DQPSK | 2 Mbps ☒ CCK-PBCC | 5.5 Mbps / 11 Mbps ☐ ERP-PBCC | 22 Mbps		
802.11g – Mode OFDM Modulation | Data Rates	☒ BPSK | 6 Mbps / 9 Mbps ☒ QPSK | 12 Mbps / 18 Mbps ☒ 16-QAM | 24 Mbps / 36 Mbps ☒ 64-QAM | 48 Mbps / 54 Mbps		
802.11n – Mode OFDM Modulation | Data Rates	☒ HT20(MCS0 to MCS7) | 7.2 / 14.4 / 21.7 / 28.9 / 43.3 / 57.8 / 65 / 72.2 Mbps ☐ HT40(MCS0 to MCS15) | 15/30/45/60/90/120/135/150/180/240/270/300 Mbps		
Other wireless options	☐ WLAN 5 GHz 802.11 a/n/ac mode (not tested within this report) ☐ Bluetooth LE (not tested within this report) ☐ Bluetooth EDR (not tested within this report) ☐ Cellular transceiver (2G/3G/4G/5G/GPS, not tested in this report)		
Max. Conducted Output Power	b-mode: 14.9 dBm g-mode: 13.1 dBm n-mode(20 MHz): 13.1 dBm		
EIRP WLAN (Calculated EIRP)	b-mode: 14.9 dBm + 0 dBi = 14.9 dBm g-mode: 13.1 dBm+ 0 dBi = 13.1 dBm n-mode(20 MHz): 13.1 dBm + 0 dBi = 13.1 dBm		
Antenna Type(s)	Rod (Eucaray RMC 12-CL)		
Antenna Gain(s)	0 dBi		
FCC label attached	No		
Test firmware / software and storage location	EUT 1/ EUT 2		
For further details refer Applicants Declaration & following technical documents			
Description of Reference Document (supplied by applicant)		**Version**	**Total Pages**
MEM20201103_CC_rf_test_manual_wilhel_R01		**R01**	**3**
ZIED82		**September 2020**	**21**

3.3 Worst case identification

WLAN mode	Data rate
802.11b	11 Mbps
802.11g	12 Mbps
802.11n, 20 MHz bandwidth	MCS3

3.4 Modifications on Test sample

Additions/deviations or exclusions	-

4 Measurements

4.1 Duty-Cycle

Testing method:

The measurement is made according to relevant reference clauses:
(See Tables *Summary of Test Results* and *Summary of Test Methods* on page 5)

The necessary duty-cycle correction factor is determined on nominal conditions on middle channel only. It is assumed that no noticeable changes occur when tested on other channels or climatic conditions.

EUT settings
The EUT was instructed to send with maximum power (if adjustable) according applicants instructions.
Different modulation characteristics have been checked, e.g. data rates which EUT can operate.

A special firmware program is used for test purposes. In opposite to normal operating mode a higher duty-cycle is set in order to facilitate the measurements. This is maximized at the extent possible.

The necessary duty-cycle correction factor is determined on nominal conditions on one channel in each operable frequency-band. It is assumed that no noticeable changes occur when tested on other channels or climatic conditions. The Duty-Cycle was constant, means without variations.

Formula to calculate Duty-Cycle:

Duty cycle calculations: $x = {TX_{ON}}/{(TX_{ON} + TX_{OFF})}$	Duty cycle factor: DC=	Regarding power: $10 * log({1}/{x})$ dB
		Regarding field strength: $20 * log({1}/{x})$ dB

☒ The results were corrected in order to evaluate for worst-case result each time when average values are necessary for example average radiated emissions or similar
☐ No correction necessary: Duty-Cycle > 98%

4.1.1 Measurement Location

Test site	120910 - Radio Laboratory 1 (TS 8997)

4.1.2 Result

Duty-Cycle [%]	Duty-Cycle correction Power [dB]	Duty-Cycle correction Field Strength [dB]
91.988	0.363	0.726
83.740	0.771	1.542
71.041	1.485	2.970

4.2 RF output power

4.2.1 Description of the general test setup and methodology, see below example:

The EUT's RF-signal is coupled out by a suitable antenna coupling connector (1). The signal is first attenuated (2) then connected to power meter (3) or spectrum-analyzer (4) for RF-conducted measurements. The specific attenuation loss is determined prior to the measurement within a set-up attenuation measurement. These are then taken into account by correcting the measurement readings.

MIMO

The EUT use MIMO technology as it use multiple antennas for receive and transmit. The measurements are performed by using R&S TS8997 (Ref.No. 693) test system which is able to perform measurements simultanuously and time-synchronized on maximum 8 antenna conducted RF-ports. A common trigger ensures the sampling time is minimized so the total power represents a sampling value calculated for all 8-ports simultanuously for each time bin/frame. A high data sampling rate together with a wide band power measurement capability ensures that latest modulation schemes are correctly measured. Therefore testing method Subchapter E1 of KDB662911 is fulfilled. (measure-and-sum technique).

Schematic:

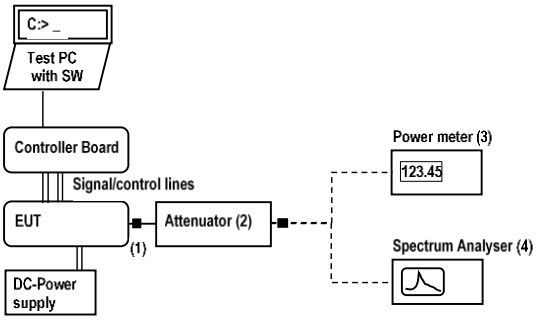

Schematic MIMO:

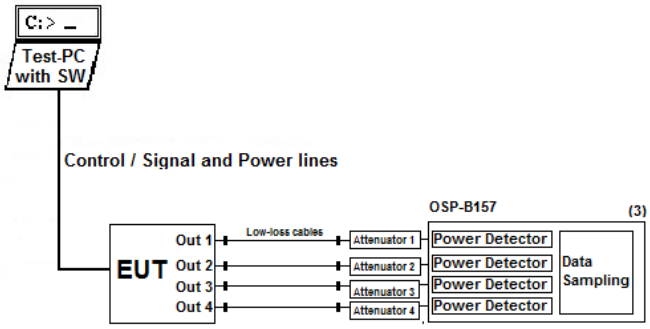

Testing method:

The measurement is made according to relevant reference clauses:
(See Tables *Summary of Test Results* and *Summary of Test Methods* on page 5)

Measurement is made using Rohde & Schwarz TS8997 test system.

Test method	AVGSA-1 / AVGSA-1 alternative (duty-cycle > 98%)
SISO	☒
MIMO	☐ Summation of values from two antenna ports
Remarks	-

The measurement was performed in non-hopping transmission mode with the carrier set to lowest/middle and highest channel.

EUT settings
The EUT was instructed to send with maximum power (if adjustable) according applicants instructions.
Different modulation characteristics have been checked, e.g. data rates which EUT can operate

4.2.2 Measurement Location

Test site	120910 - Radio Laboratory 1 (TS 8997)

4.2.3 Limit

Frequency Range [MHz]	Limit [W]	Limit [dBm]	Detector	RBW / VBW [MHz]
2400 - 2483.5	1	30	RMS	20 / 30

4.2.4 Result

Mode	Channel	Frequency [MHz]	Max Power [RMS]	Result
b-mode[11MBps] (16,5; 2412MHz)	1	2412.000000	14.4	PASS
b-mode[11MBps] (16,5; 2437MHz)	6	2437.000000	14.9	PASS
b-mode[11MBps] (16,5; 2462MHz)	11	2462.000000	14.8	PASS
b-mode[1MBps] (16,5; 2412MHz)	1	2412.000000	14.1	PASS
b-mode[1MBps] (16,5; 2437MHz)	6	2437.000000	14.9	PASS
b-mode[1MBps] (16,5; 2462MHz)	11	2462.000000	14.8	PASS
b-mode[2MBps] (16,5; 2412MHz)	1	2412.000000	14.5	PASS
b-mode[2MBps] (16,5; 2437MHz)	6	2437.000000	14.7	PASS
b-mode[2MBps] (16,5; 2462MHz)	11	2462.000000	14.8	PASS
b-mode[5.5MBps] (16,5; 2412MHz)	1	2412.000000	14.4	PASS
b-mode[5.5MBps] (16,5; 2437MHz)	6	2437.000000	14.6	PASS
b-mode[5.5MBps] (16,5; 2462MHz)	11	2462.000000	14.7	PASS
g-mode[12MBps] (16,5; 2412MHz)	1	2412.000000	10.9	PASS
g-mode[12MBps] (16,5; 2437MHz)	6	2437.000000	13.1	PASS
g-mode[12MBps] (16,5; 2462MHz)	11	2462.000000	11.2	PASS
g-mode[18MBps] (16,5; 2412MHz)	1	2412.000000	11.0	PASS
g-mode[18MBps] (16,5; 2437MHz)	6	2437.000000	13.0	PASS
g-mode[18MBps] (16,5; 2462MHz)	11	2462.000000	11.2	PASS
g-mode[24MBps] (16,5; 2412MHz)	1	2412.000000	10.7	PASS
g-mode[24MBps] (16,5; 2437MHz)	6	2437.000000	12.8	PASS

g-mode[24MBps] (16,5; 2462MHz)	11	2462.000000	11.0	PASS
g-mode[36MBps] (16,5; 2412MHz)	1	2412.000000	10.9	PASS
g-mode[36MBps] (16,5; 2437MHz)	6	2437.000000	12.9	PASS
g-mode[36MBps] (16,5; 2462MHz)	11	2462.000000	11.1	PASS
g-mode[48MBps] (16,5; 2412MHz)	1	2412.000000	10.9	PASS
g-mode[48MBps] (16,5; 2437MHz)	6	2437.000000	13.0	PASS
g-mode[48MBps] (16,5; 2462MHz)	11	2462.000000	11.1	PASS
g-mode[54MBps] (16,5; 2412MHz)	1	2412.000000	10.9	PASS
g-mode[54MBps] (16,5; 2437MHz)	6	2437.000000	12.6	PASS
g-mode[54MBps] (16,5; 2462MHz)	11	2462.000000	11.1	PASS
g-mode[6MBps] (16,5; 2412MHz)	1	2412.000000	10.5	PASS
g-mode[6MBps] (16,5; 2437MHz)	6	2437.000000	12.9	PASS
g-mode[6MBps] (16,5; 2462MHz)	11	2462.000000	11.2	PASS
g-mode[9MBps] (16,5; 2412MHz)	1	2412.000000	10.9	PASS
g-mode[9MBps] (16,5; 2437MHz)	6	2437.000000	12.9	PASS
g-mode[9MBps] (16,5; 2462MHz)	11	2462.000000	11.3	PASS
n-mode[MCS0] (16,5; 2412MHz)	1	2412.000000	11.1	PASS
n-mode[MCS0] (16,5; 2437MHz)	6	2437.000000	13.1	PASS
n-mode[MCS0] (16,5; 2462MHz)	11	2462.000000	11.3	PASS
n-mode[MCS1] (16,5; 2412MHz)	1	2412.000000	11.0	PASS
n-mode[MCS1] (16,5; 2437MHz)	6	2437.000000	13.1	PASS
n-mode[MCS1] (16,5; 2462MHz)	11	2462.000000	11.3	PASS
n-mode[MCS2] (16,5; 2412MHz)	1	2412.000000	11.1	PASS
n-mode[MCS2] (16,5; 2437MHz)	6	2437.000000	13.1	PASS
n-mode[MCS2] (16,5; 2462MHz)	11	2462.000000	11.3	PASS
n-mode[MCS3] (16,5; 2412MHz)	1	2412.000000	11.2	PASS
n-mode[MCS3] (16,5; 2437MHz)	6	2437.000000	13.1	PASS
n-mode[MCS3] (16,5; 2462MHz)	11	2462.000000	11.4	PASS
n-mode[MCS4] (16,5; 2412MHz)	1	2412.000000	10.9	PASS
n-mode[MCS4] (16,5; 2437MHz)	6	2437.000000	12.9	PASS
n-mode[MCS4] (16,5; 2462MHz)	11	2462.000000	11.2	PASS
n-mode[MCS5] (16,5; 2412MHz)	1	2412.000000	11.1	PASS
n-mode[MCS5] (16,5; 2437MHz)	6	2437.000000	13.0	PASS
n-mode[MCS5] (16,5; 2462MHz)	11	2462.000000	11.2	PASS
n-mode[MCS6] (16,5; 2412MHz)	1	2412.000000	10.9	PASS
n-mode[MCS6] (16,5; 2437MHz)	6	2437.000000	12.7	PASS
n-mode[MCS6] (16,5; 2462MHz)	11	2462.000000	11.2	PASS
n-mode[MCS7] (16,5; 2412MHz)	1	2412.000000	10.9	PASS
n-mode[MCS7] (16,5; 2437MHz)	6	2437.000000	11.7	PASS
n-mode[MCS7] (16,5; 2462MHz)	11	2462.000000	11.2	PASS

Remark: for more information and graphical plot see annex A1 **CETECOM_TR20-1-0009201T04a-A1**

4.3 Power spectral density

4.3.1 Description of the general test setup and methodology, see below example:

The EUT's RF-signal is coupled out by a suitable antenna coupling connector (1). The signal is first attenuated (2) then connected to spectrum-analyzer (4) for RF-conducted measurements. The specific attenuation loss is determined prior to the measurement within a set-up attenuation measurement. These are then taken into account by correcting the measurement readings of the spectrum-analyzer.

Schematic:

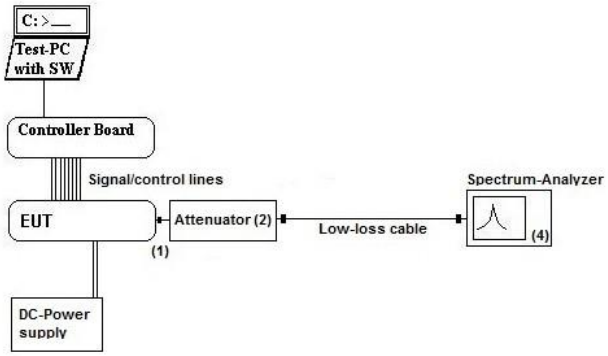

Testing method:

The measurement is made according to relevant reference clauses:
(See Tables *Summary of Test Results* and *Summary of Test Methods* on page 5)

Measurement is made using Rohde & Schwarz TS8997 test system.

Test method	PKPSD-Method
Remarks	-

EUT settings
The EUT was instructed to send with maximum power (if adjustable) according applicants instructions.

4.3.2 Measurement Location

Test site	120910 - Radio Laboratory 1 (TS 8997)

4.3.3 Limit

Limit [dBm] @ 3 kHz	Detector [MaxHold]	RBW / VBW [kHz]
<= 8	**Peak**	**3 / 10**

4.3.4 Result

Mode	Channel	Frequency [MHz]	PSD [dBm]	Result
b-mode[11MBps] (16,5; 2412MHz)	1	2412	2.071	Passed
b-mode[11MBps] (16,5; 2437MHz)	6	2437	2.545	Passed
b-mode[11MBps] (16,5; 2462MHz)	11	2462	2.160	Passed
g-mode[12MBps] (16,5; 2412MHz)	1	2412	-4.391	Passed
g-mode[12MBps] (16,5; 2437MHz)	6	2437	-2.425	Passed
g-mode[12MBps] (16,5; 2462MHz)	11	2462	-4.633	Passed
n-mode[MCS3] (16,5; 2412MHz)	1	2412	-3.742	Passed
n-mode[MCS3] (16,5; 2437MHz)	6	2437	-1.195	Passed
n-mode[MCS3] (16,5; 2462MHz)	11	2462	-8.358	Passed

Remark: for more information and graphical plot see annex A1 **CETECOM_TR20-1-0009201T04a-A1**

4.4 Minimum Emission Bandwidth 6 dB

4.4.1 Description of the general test setup and methodology, see below example:

The EUT's RF-signal is coupled out by a suitable antenna coupling connector (1). The signal is first attenuated (2) then connected to spectrum-analyzer (4) for RF-conducted measurements. The specific attenuation loss is determined prior to the measurement within a set-up attenuation measurement. These are then taken into account by correcting the measurement readings of the spectrum-analyzer.

Schematic:

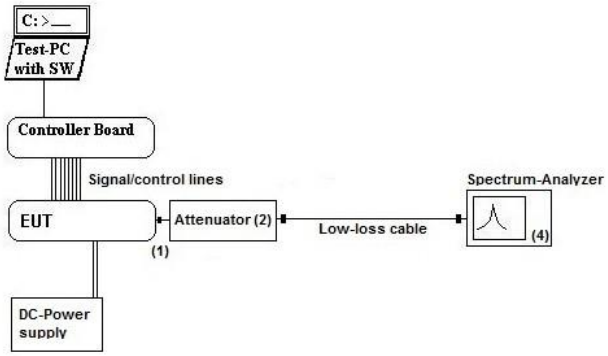

Testing method:

The measurement is made according to relevant reference clauses:
(See Tables *Summary of Test Results* and *Summary of Test Methods* on page 5)

Measurement is made using Rohde & Schwarz TS8997 test system.

4.4.2 Measurement Location

Test site	120910 - Radio Laboratory 1 (TS 8997)

4.4.3 Limit

Limit [kHz]	Detector [MaxHold]	RBW / VBW [kHz]
>= 500	**MaxPeak**	**100 / 300**

4.4.4 Result

Mode	Channel	Frequency [MHz]	6 dB bandwidth [MHz]	Result
b-mode[11MBps] (16,5; 2412MHz)	1	2412	10.550	Passed
b-mode[11MBps] (16,5; 2437MHz)	6	2437	9.900	Passed
b-mode[11MBps] (16,5; 2462MHz)	11	2462	10.550	Passed
g-mode[12MBps] (16,5; 2412MHz)	1	2412	15.200	Passed
g-mode[12MBps] (16,5; 2437MHz)	6	2437	15.200	Passed
g-mode[12MBps] (16,5; 2462MHz)	11	2462	15.200	Passed
n-mode[MCS3] (16,5; 2412MHz)	1	2412	15.750	Passed
n-mode[MCS3] (16,5; 2437MHz)	6	2437	15.500	Passed
n-mode[MCS3] (16,5; 2462MHz)	11	2462	15.550	Passed

Remark: for more information and graphical plot see annex A1 **CETECOM_TR20-1-0009201T04a-A1**

4.5 Occupied Channel Bandwidth 99%

4.5.1 Description of the general test setup and methodology, see below example:

The EUT's RF-signal is coupled out by a suitable antenna coupling connector (1). The signal is first attenuated (2) then connected to spectrum-analyzer (4) for RF-conducted measurements. The specific attenuation loss is determined prior to the measurement within a set-up attenuation measurement. These are then taken into account by correcting the measurement readings of the spectrum-analyzer.

Schematic:

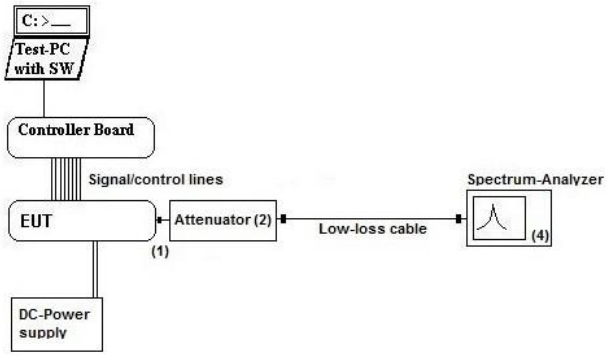

Testing method:

The measurement is made according to relevant reference clauses:
(See Tables *Summary of Test Results* and *Summary of Test Methods* on page 5)

Measurement is made using Rohde & Schwarz TS8997 test system.

4.5.2 Measurement Location

Test site	120910 - Radio Laboratory 1 (TS 8997)

4.5.3 Limit

When the occupied bandwidth limit is not stated in the applicable reference measurement method, the transmitted signal bandwidth shall be reported as the 99% emission bandwidth, as calculated or measured.

4.5.4 Result

Mode	Channel	Frequency [MHz]	99% Occupied bandwidth [MHz]	Result
b-mode[11MBps] (16,5; 2412MHz)	1	2412	14.600	Passed
b-mode[11MBps] (16,5; 2437MHz)	6	2437	14.600	Passed
b-mode[11MBps] (16,5; 2462MHz)	11	2462	14.600	Passed
g-mode[12MBps] (16,5; 2412MHz)	1	2412	16.300	Passed
g-mode[12MBps] (16,5; 2437MHz)	6	2437	16.500	Passed
g-mode[12MBps] (16,5; 2462MHz)	11	2462	16.300	Passed
n-mode[MCS3] (16,5; 2412MHz)	1	2412	17.500	Passed
n-mode[MCS3] (16,5; 2437MHz)	6	2437	17.700	Passed
n-mode[MCS3] (16,5; 2462MHz)	11	2462	17.500	Passed

Remark: for more information and graphical plot see annex A1 **CETECOM_TR20-1-0009201T04a-A1**

4.6 Emissions in non-restricted frequency bands

4.6.1 Description of the general conducted test setup and methodology, see below example:

The EUT's RF-signal is coupled out by a suitable antenna coupling connector (1). The signal is first attenuated (2) then connected to spectrum-analyzer (4) for RF-conducted measurements. The specific attenuation loss is determined prior to the measurement within a set-up attenuation measurement. These are then taken into account by correcting the measurement readings of the spectrum-analyzer.

Schematic:

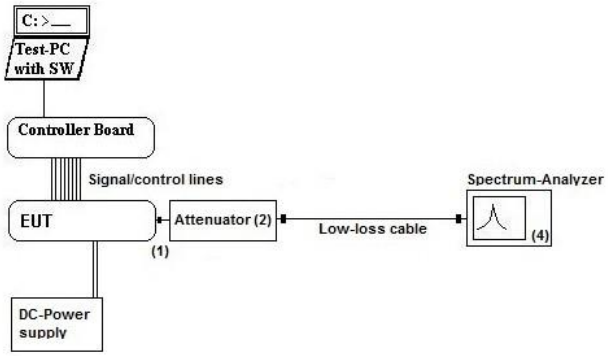

Testing method:

The measurement is made according to relevant reference clauses:
(See Tables *Summary of Test Results* and *Summary of Test Methods* on page 5)

Measurement is made using Rohde & Schwarz TS8997 test system.

The measurements were performed with the RBW set to 100 kHz & maximum carrier level was indicated with MAX-Hold positive peak detector using markers. Then a frequency line was set 20 or 30 dB below this measured maximum carrier level.

Then using RBW 100 kHz & spectrum analyzer span from 150 kHz to 25 GHz in three steps spurious emissions were measured with MAX-Hold positive peak detector.

The sweep time set as long as necessary to capture the full signal burst per hopping channel. The burst on-period is captured by setting appropriate markers in the rising and falling edges.

EUT settings
The EUT was instructed to send with maximum power (if adjustable) according applicants instructions.
Different modulation characteristics have been checked e.g. data rates which EUT can operate.

4.6.2 Measurement Location

Test site	120910 - Radio Laboratory 1 (TS 8997)

4.6.3 Limit

Frequency Range [MHz]	Limit [dBc]
0.15 – 25000	**-20 / -30**

4.6.4 Result

Mode	Channel	Frequency [MHz]	Result
b-mode[11MBps] (16,5; 2412MHz)	1	2412	Passed
b-mode[11MBps] (16,5; 2437MHz)	6	2437	Passed
b-mode[11MBps] (16,5; 2462MHz)	11	2462	Passed
g-mode[12MBps] (16,5; 2412MHz)	1	2412	Passed
g-mode[12MBps] (16,5; 2437MHz)	6	2437	Passed
g-mode[12MBps] (16,5; 2462MHz)	11	2462	Passed
n-mode[MCS3] (16,5; 2412MHz)	1	2412	Passed
n-mode[MCS3] (16,5; 2437MHz)	6	2437	Passed
n-mode[MCS3] (16,5; 2462MHz)	11	2462	Passed

Remark1: every RF-Port tested separatelly in case on MIMO device
Remark2: for more information and graphical plot see annex A1 **CETECOM_TR20-1-0009201T04a-A1**

4.7 Radiated field strength emissions below 30 MHz

4.7.1 Description of the general test setup and methodology, see below example:

Evaluating the radiated field emissions are done first by an exploratory emission measurement and a final measurement for most critical frequencies determined.

The loop antenna was placed at 1 m height above ground plane and 3 m measurement distance from set-up for investigations. Because of reduced measurement distance, correction data were applied, as stated in chapter "General Limit - Radiated field strength emissions below 30 MHz". The tests are performed in the semi anechoic room recognized by the regulatory commission.

Schematic:

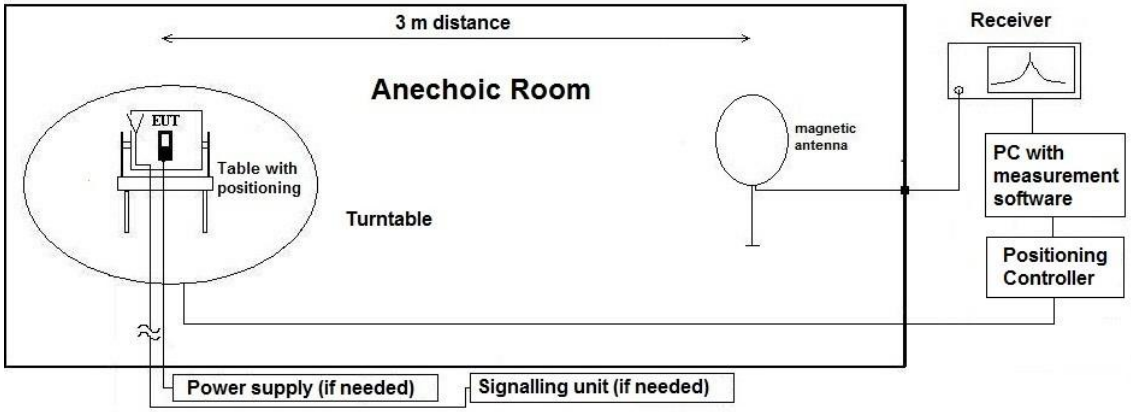

Testing method:

The measurement is made according to relevant reference clauses:
(See Tables *Summary of Test Results* and *Summary of Test Methods* on page 5)

Exploratory, preliminary measurements
The EUT and its associated accessories are placed on a non-conductive position manipulator (tipping device) of 0.8 m height which is placed on the turntable. By rotating the turntable (step 90°, range 0°to 360°) and the EUT itself either on 3-orthogonal axis (portable equipment) or 2-orthogonal axis (defined operational position of EUT), the emission spectrum was recorded.

The loop antenna was moved at least to 2-perpendicular axes (antenna vector in direction of EUT and parallel to EUT) in order to maximize the emissions. The results are documented in a diagram. Critical frequencies (low margin to limit) are saved within a data reduction table for further investigations. If various operating modes are supported, further investigations are made to find the worst-case. Also the interconnection cables and equipment position were varied in order to maximize the emissions.

Final measurement on critical frequencies
Based on the exploratory measurements, the most critical frequencies are re-measured by maintaining the EUT's worst-case operation mode, cable position, etc.

First a frequency zoom around the critical frequency is done to locate the frequency more precisely. After this step, for all identified critical frequencies, the maximum peak was determined.

Following parameters were varied: the turntable angle continuously in the range 0 to 360 degree, the EUT itself either over 3-orthogonal axis (not defined usage position) or 2-orthogonal axis (defined usage position).

On the determined worst-case position, a final measurement with necessary bandwidth and detector according standard has been carried out.

Formula:

$E_C = E_R + AF + C_L + D_F - G_A$

$M = L_T - E_C$

AF = Antenna factor
C_L = Cable loss
D_F = Distance correction factor (if used)
E_C = Electrical field – corrected value
E_R = Receiver reading
G_A = Gain of pre-amplifier (if used)
L_T = Limit
M = Margin

All units are dB-units, positive margin means value is below limit.

4.7.2 Measurement Location

Test site	120901 - SAC - Radiated Emission <1GHz

Correction factors due to reduced meas. distance (f< 30 MHz):

The used correction factors when the measurement distance is reduced compared to regulatory measurement distance, are calculated according Extrapolation formulas valid for EUT's with maximum dimension of 0.625xLambda. Formula 2+3+4 as presented in ANSI C63.10, Chapter 6.4.4 are used for the calculations of proper extrapolation factors

Frequency -Range	f [kHz/MHz]	Lambda [m]	Far-Field Point [m]	Distance Limit accord. 15.209 [m]		1st Condition (dmeas< Dnear-field)	2'te Condition (Limit distance bigger dnear-field)	Distance Correction accord. Formula
	9.00E+03	33333.33	5305.17			fullfilled	not fullfilled	-80.00
	1.00E+04	30000.00	4774.65			fullfilled	not fullfilled	-80.00
	2.00E+04	15000.00	2387.33			fullfilled	not fullfilled	-80.00
	3.00E+04	10000.00	1591.55			fullfilled	not fullfilled	-80.00
	4.00E+04	7500.00	1193.66			fullfilled	not fullfilled	-80.00
	5.00E+04	6000.00	954.93			fullfilled	not fullfilled	-80.00
	6.00E+04	5000.00	795.78			fullfilled	not fullfilled	-80.00
	7.00E+04	4285.71	682.09			fullfilled	not fullfilled	-80.00
	8.00E+04	3750.00	596.83	300		fullfilled	not fullfilled	-80.00
	9.00E+04	3333.33	530.52			fullfilled	not fullfilled	-80.00
kHz	1.00E+05	3000.00	477.47			fullfilled	not fullfilled	-80.00
	1.25E+05	2400.00	381.97			fullfilled	not fullfilled	-80.00
	2.00E+05	1500.00	238.73			fullfilled	fullfilled	-78.02
	3.00E+05	1000.00	159.16			fullfilled	fullfilled	-74.49
	4.00E+05	750.00	119.37			fullfilled	fullfilled	-72.00
	4.90E+05	612.24	97.44			fullfilled	fullfilled	-70.23
	5.00E+05	600.00	95.49			fullfilled	not fullfilled	-40.00
	6.00E+05	500.00	79.58			fullfilled	not fullfilled	-40.00
	7.00E+05	428.57	68.21			fullfilled	not fullfilled	-40.00
	8.00E+05	375.00	59.68			fullfilled	not fullfilled	-40.00
	9.00E+05	333.33	53.05			fullfilled	not fullfilled	-40.00
	1.00	300.00	47.75			fullfilled	not fullfilled	-40.00
	1.59	188.50	**30.00**			fullfilled	not fullfilled	-40.00
	2.00	150.00	23.87			fullfilled	fullfilled	-38.02
	3.00	100.00	15.92			fullfilled	fullfilled	-34.49
	4.00	75.00	11.94			fullfilled	fullfilled	-32.00
	5.00	60.00	9.55			fullfilled	fullfilled	-30.06
	6.00	50.00	7.96			fullfilled	fullfilled	-28.47
	7.00	42.86	6.82			fullfilled	fullfilled	-27.13
	8.00	37.50	5.97			fullfilled	fullfilled	-25.97
	9.00	33.33	5.31			fullfilled	fullfilled	-24.95
	10.00	30.00	4.77	30		fullfilled	fullfilled	-24.04
	10.60	28.30	4.50			fullfilled	fullfilled	-23.53
MHz	11.00	27.27	4.34			fullfilled	fullfilled	-23.21
	12.00	25.00	3.98			fullfilled	fullfilled	-22.45
	13.56	22.12	3.52			fullfilled	fullfilled	-21.39
	15.00	20.00	3.18			fullfilled	fullfilled	-20.51
	15.92	18.85	**3.00**			fullfilled	fullfilled	-20.00
	17.00	17.65	2.81			not fullfilled	fullfilled	-20.00
	18.00	16.67	2.65			not fullfilled	fullfilled	-20.00
	20.00	15.00	2.39			not fullfilled	fullfilled	-20.00
	21.00	14.29	2.27			not fullfilled	fullfilled	-20.00
	23.00	13.04	2.08			not fullfilled	fullfilled	-20.00
	25.00	12.00	1.91			not fullfilled	fullfilled	-20.00
	27.00	11.11	1.77			not fullfilled	fullfilled	-20.00
	29.00	10.34	1.65			not fullfilled	fullfilled	-20.00
	30.00	10.00	1.59			not fullfilled	fullfilled	-20.00

4.7.3 Limit

Radiated emissions limits (3 meters)					
Frequency Range [MHz]	Limit [µV/m]	Limit [dBµV/m]	Distance [m]	Detector	RBW [kHz]
0.009 – 0.09	2400 / f [kHz]	67.6 – 20Log(f) (kHz)	300	Pk & Avg	0.2
0.09 – 0.11	2400 / f [kHz]	67.6 – 20Log(f) (kHz)	300	Quasi peak	0.2
0.11 – 0.15	2400 / f [kHz]	67.6 – 20Log(f) (kHz)	300	Pk & Avg	0.2
0.15 – 0.49	2400 / f [kHz]	67.6 – 20Log(f) (kHz)	300	Pk & Avg	9
0.49 – 1.705	24000 / f [kHz]	87.6 – 20Log(f) (kHz)	30	Quasi peak	9
1.705 - 30	30	29.5	30	Quasi peak	9

*Remark: In Canada same limits apply, just unit reference is different

4.7.4 Result

Diagram	Channel	Mode	Maximum Level [dBµV/m] Frequency Range 0.009 – 30 MHz	Result
2.01a	6	b-mode | 11Mbit| ch06	18.653 @ 21.886 MHz	Passed
2.01b	6	b-mode | 11Mbit| ch06	18.481 @ 22.818 MHz	Passed
2.02a	11	g-mode | 12Mbit| ch11	20.044 @ 22.198 MHz	Passed
2.02b	11	g-mode | 12Mbit| ch11	18.990 @ 25.058 MHz	Passed
2.03a	1	n-mode | HT20 | MCS3| ch01	18.361 @ 19.506 MHz	Passed
2.03b	1	n-mode | HT20 | MCS3| ch01	19.625 @ 21.022 MHz	Passed

Remark: for more information and graphical plot see annex A1 **CETECOM_TR20-1-0009201T04a-A1**

4.8 Radiated field strength emissions 30 MHz – 1 GHz

4.8.1 Description of the general test setup and methodology, see below example:

Evaluating the emissions have to be done first by an exploratory emissions measurement and a final measurement for most critical frequencies. The tests are performed in a CISPR 16-1-4:2010 compliant semi anechoic room (SAR) and fully anechoic room (FAR) recognized by the regulatory commission. The measurement distance was set to 3 meter for frequencies up to 18 GHz and 2 meter above 18 GHz. A logarithmic periodic antenna is used for the frequency range 30 MHz to 1 GHz. Horn antennas are used for frequency range 1 GHz to 40 GHz. The EUT is aligned within 3 dB beam width of the measurement antenna with three orthogonal axis measurements on the EUT.

Schematic:

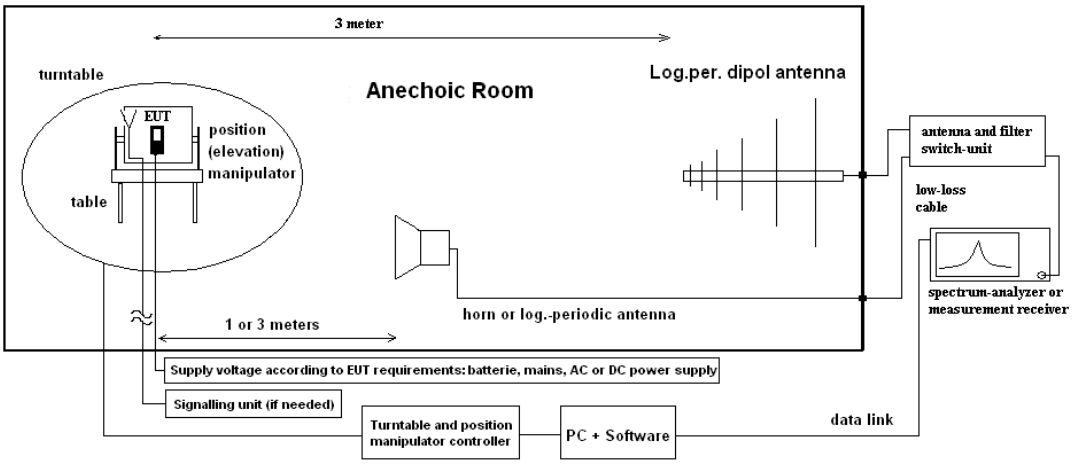

Testing method:

The measurement is made according to relevant reference clauses:
(See Tables *Summary of Test Results* and *Summary of Test Methods* on page 5)

Exploratory, preliminary measurements
The EUT and its associated accessories are placed on a non-conductive position manipulator (tipping device) of 0.8 m height which is placed on the turntable. By rotating the turntable (range 0° to 360°, step 90°) and the EUT itself either on 3-orthogonal axis (portable equipment) or 2-orthogonal axis (defined operational position of EUT) the emission spectrum and its characteristics was recorded with an EMI-receiver, broadband antenna and software.

Measurement antenna: horizontal and vertical, heights: 1,0 m and 1,82 m as worst-case determined by an exploratory emission measurements. The results are documented in a diagram. Critical frequencies (low margin to limit) are saved within a table for further investigations. If various operating modes are supported, further investigations are made to find the worst-case of them. Also the interconnection cables and equipment position were varied in order to maximize the emissions.

Final measurement on critical frequencies
Based on the exploratory measurements, the most critical frequencies are re-measured by maintaining the EUT's worst-case operation mode, cable position, etc. either on 10m OATS or 3m semi-anechoic room.
First a frequency zoom around the critical frequency is done to locate the frequency more precisely. After this step, for all identified critical frequencies, the maximum peak was determined.

Following parameters were varied: the turntable angle continuously in the range 0 to 360 degree, the EUT itself either over 3-orthogonal axis (not defined usage position) or 2-orthogonal axis (defined usage position). The measurement antenna height between 1 m and 4 m.
On the determined worst-case position, a final measurement with necessary bandwidth and detector according standard has been carried out

Formula:

$E_C = E_R + AF + C_L + D_F - G_A$ (1)

$M = L_T - E_C$ (2)

AF = Antenna factor
C_L = Cable loss
D_F = Distance correction factor (if used)
E_C = Electrical field – corrected value
E_R = Receiver reading
G_A = Gain of pre-amplifier (if used)
L_T = Limit
M = Margin

All units are dB-units, positive margin means value is below limit.

4.8.2 Measurement Location

Test site	120901 - SAC - Radiated Emission <1GHz

4.8.3 Limit

Radiated emissions limits (3 meters)				
Frequency Range [MHz]	Limit [µV/m]	Limit [dBµV/m]	Detector	RBW / VBW [kHz]
30 - 88	100	40.0	Quasi peak	100 / 300
88 - 216	150	43.5	Quasi peak	100 / 300
216 - 960	200	46.0	Quasi peak	100 / 300
960 - 1000	500	54.0	Quasi peak	100 / 300

4.8.4 Result

Diagram	Channel	Mode	Maximum Level [dBµV/m] Frequency Range 30 – 1000 MHz	Result
3.01a	6	b-mode | 11Mbit| ch06	40.50 @ 622.484 MHz	Passed
3.01b	6	b-mode | 11Mbit| ch06	42.67 @ 622.482 MHz	Passed
3.02b	11	g-mode | 12Mbit| ch11	36.54 @ 549.994 MHz	Passed
3.02b	11	g-mode | 12Mbit| ch11	41.48 @ 622.500 MHz	Passed
3.03a	1	n-mode | HT20 | MCS3| ch01	38.81 @ 549.998 MHz	Passed
3.03b	1	n-mode | HT20 | MCS3| ch01	42.64 @ 622.494 MHz	Passed

Remark: for more information and graphical plot see annex A1 **CETECOM_TR20-1-0009201T04a-A1**

4.9 Radiated field strength emissions above 1 GHz

4.9.1 Description of the general test setup and methodology, see below example:

Evaluating the emissions have to be done first by an exploratory emissions measurement and a final measurement for most critical frequencies. The tests are performed in a CISPR 18-1-4:2010 compliant fully anechoic room (FAR) recognized by the regulatory commission. The measurement distance was set to 3 meter for frequencies up to 18 GHz and 2 meter above 18 GHz. A logarithmic periodic antenna is used for the frequency range 30 MHz to 1 GHz. Horn antennas are used for frequency range 1 GHz to 40 GHz. The EUT is aligned within 3 dB beam width of the measurement antenna with three orthogonal axis measurements on the EUT.

Schematic:

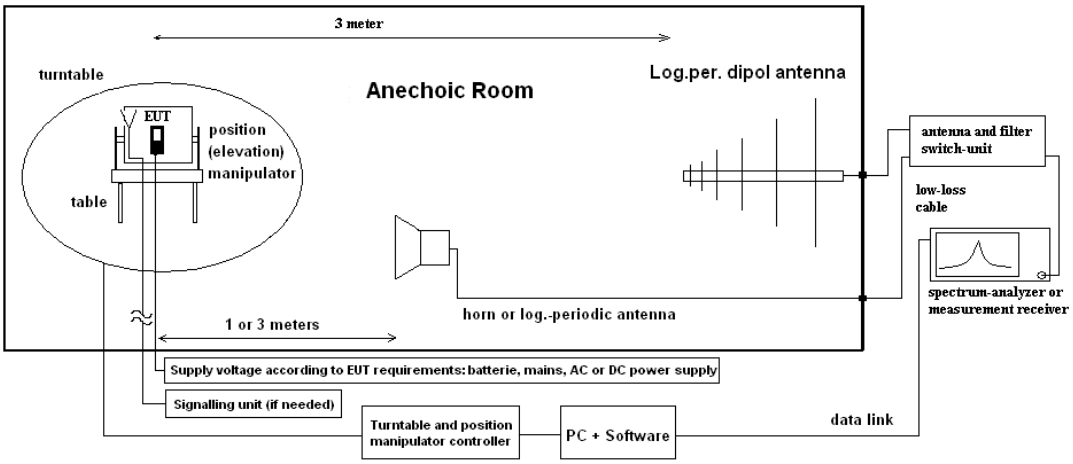

Testing method:

The measurement is made according to relevant reference clauses:
(See Tables *Summary of Test Results* and *Summary of Test Methods* on page 5)

Exploratory, preliminary measurements
The EUT and its associated accessories are placed on a non-conductive position manipulator (tipping device) of 1.55 m height which is placed on the turntable. By rotating the turntable (range 0° to 360°, step 15°) and the EUT itself either on 3-orthogonal axis (portable equipment) or 2-orthogonal axis (defined operational position of EUT) the emission spectrum and its characteristics was recorded with an EMI-receiver, broadband antenna and software.
The measurements are performed in horizontal and vertical polarization of the measurement antennas. The results are documented in a diagram. Critical frequencies (low margin to limit) are saved within a table for further investigations. If various operating modes are supported, further investigations are made to find the worst-case of them. Also the interconnection cables and equipment position were varied in order to maximize the emissions.

Final measurement on critical frequencies
Based on the exploratory measurements, the most critical frequencies are re-measured by maintaining the EUT's worst-case operation mode, cable position, etc.

First a frequency zoom around the critical frequency is done to locate the frequency more precisely. After this step, for all identified critical frequencies, the maximum peak was determined.

Following parameters were varied: the turntable angle continuously in the range 0 to 360 degree, the EUT itself over 3-orthogonal axis and the height for EUT with large dimensions or three axis scan for portable/small equipment.

On the determined worst-case position, a final measurement with necessary bandwidth and detector according standard has been carried out.

Formula:

$E_C = E_R + A_F + C_L + D_F - G_A$ (1)

$M = L_T - E_C$ (2)

E_C = Electrical field – corrected value
E_R = Receiver reading
M = Margin
L_T = Limit
A_F = Antenna factor
C_L = Cable loss
D_F = Distance correction factor (if used)
G_A = Gain of pre-amplifier (if used)

All units are dB-units, positive margin means value is below limit.

4.9.2 Measurement Location

Test site 1 – 15GHz	120904 - FAC1 - Radiated Emissions
Test site 15 – 26.5 GHz	120907 - FAC2

4.9.3 Limit

Radiated emissions limits (3 meters)				
Frequency Range [MHz]	**Limit [µV/m]**	**Limit [dBµV/m]**	**Detector**	**RBW / VBW [kHz]**
Above 1000	500	54	Average	1000 / 3000
Above 1000	5000	74	Peak	1000 / 3000

4.9.4 Result

Diagram	Channel	Mode	Maximum Level [dBµV/m] Frequency Range 1 – 15 GHz	Result
4.01a	6	b-mode | 11Mbit| ch06	60.333 @ 2.774 GHz	Passed
4.01b	6	b-mode | 11Mbit| ch06	59.345 @ 14.211 GHz	Passed
4.02a	11	g-mode | 12Mbit| ch11	59.749 @ 2.786 GHz	Passed
4.02b	11	g-mode | 12Mbit| ch11	58.864 @ 14.221 GHz	Passed
4.03a	1	n-mode | HT20 | MCS3| ch01	58.359 @ 14.195 GHz	Passed

Remark: for more information and graphical plot see annex A1 **CETECOM_TR20-1-0009201T04a-A1**

Diagram	Channel	Mode	Maximum Level [dBµV/m] Frequency Range 15 – 26.5 GHz	Result
4.01c	6	b-mode | 11Mbit| ch06	59.34 @ 25.436 GHz	Passed
4.02c	11	g-mode | 12Mbit| ch11	59.17 @ 25.371 GHz	Passed
4.03b	1	n-mode | HT20 | MCS3| ch01	59.08 @ 25.595 GHz	Passed

Remark: for more information and graphical plot see annex A1 **CETECOM_TR20-1-0009201T04a-A1**

4.10 Radiated Band-Edge emissions

4.10.1 Description of the general test setup and methodology, see below example:

Schematic:

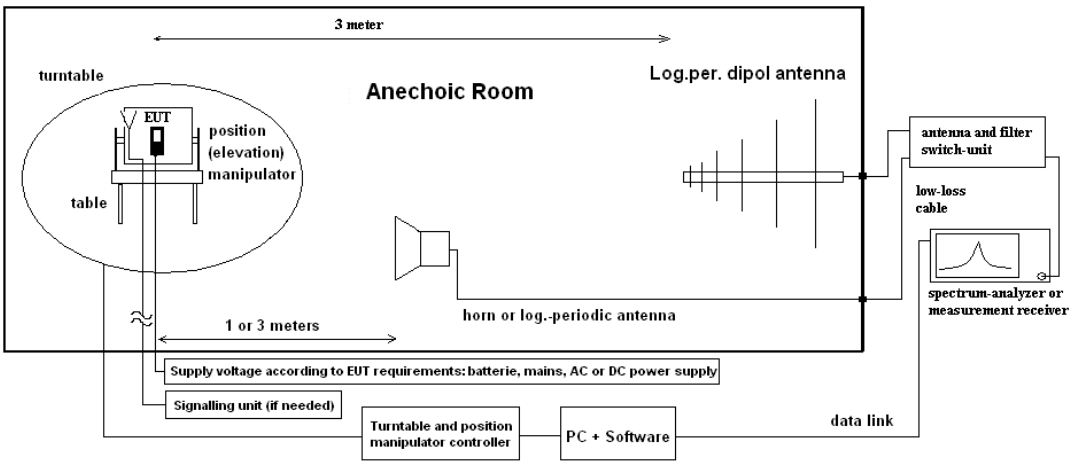

Testing method:

The measurement is made according to relevant reference clauses:
(See Tables *Summary of Test Results* and *Summary of Test Methods* on page 5)

For uncritical results where a measurement resolution bandwidth of 1MHz can clearly show the compliance without influencing the results, a field strength measurement was performed to show compliance.

For critical results a Marker-Delta marker method was used for showing compliance to restricted bands.
The method consists of three independent steps:

1. Step: Prior to the measurement the fundamental radiated In-Band field strength was performed. The determined value is used as reference value.

2. Step: Second step consist of finding the relative attenuation between the fundamental emission and the maximum local out-of-band emission (within 2 MHz range around the band edge either on the band-edge directly or some modulation product if the level is greater than that on the band-edge) when measured with lower resolution bandwidth.

3. Step: The delta value recorded in step 2 will be subtracted from value recorded in step 1, thus giving the required field strength at the band-edge. This value must fulfil the requirements for radiated spurious emissions in restricted bands in FCC §15.205 with the general limits of FCC §15.209

The EUT was instructed to send with maximum power (if adjustable) according to applicants instructions.

4.10.2 Measurement Location

Test site	120904 - FAC1 - Radiated Emissions

4.10.3 Limit

Frequency Range [MHz]	Pk Limit [dBc]	Avg Limit [dBc]	Avg Limit [dBµV/m]	Pk Limit [dBµV/m]	Detector	RBW / VBW [kHz]
Below 2390	-	-	54	74	Average / Peak	100 / 300
Above 2483.5	-	-	54	74	Average / Peak	1000 / 3000
2390 - 2400	-20	-	-	-	Peak	100 / 300
2390 - 2400	-	-30	-	-	Average	100 / 300

4.10.4 Result

Non-restricted bands near-by

Diagram	Channel	Mode	Peak [dBc]	Average [dBc]	Result
9.01	1	b-mode | 11Mbit| ch01	41.650	41.037	Passed
9.03	1	g-mode | 12Mbit| ch01	38.073	37.712	Passed
9.05	1	n-mode | HT20 | MCS3| ch01	37.699	37.889	Passed

Remark: for more information and graphical plot see annex A1 **CETECOM_TR20-1-0009201T04a-A1**

Restricted bands near-by

Diagram	Channel	Mode	Peak [dBµV/m]	Average [dBµV/m]	Result
9.02	11	b-mode | 11Mbit| ch11	57.652	47.793	Passed
9.04	11	g-mode | 12Mbit| ch11	61.560	48.928	Passed
9.06	11	n-mode | HT20 | MCS3| ch11	63.208	50.574	Passed

Remark1: Average value corrected with Duty Cycle - Factor
Remark2: for more information and graphical plot see annex A1 **CETECOM_TR20-1-0009201T04a-A1**

4.11 Results from external laboratory

None	-

4.12 Opinions and interpretations

None	-

4.13 List of abbreviations

None	-

5 Equipment lists

ID	Description	Manufacturer	SerNo	Cal due date
	120901 - SAC - Radiated Emission <1GHz			**2025-Jul-21**
20574	Biconilog Hybrid Antenna BTA-L	Frankonia GmbH	980026L	2022-May-03
20487	CETECOM Semi Anechoic Chamber < 1GHz	ETS-Lindgren Gmbh	-	2025-Jul-15
20620	EMI Test Receiver ESU26	Rohde & Schwarz Messgerätebau GmbH	100362	2021-May-13
20482	filter matrix Filter matrix SAR 1	CETECOM GmbH	-	
25038	Loop Antenna HFH2-Z2	Rohde & Schwarz Messgerätebau GmbH	879824/13	2022-Apr-07
20885	Power Supply EA3632A	Agilent Technologies Deutschland GmbH	75305850	
	120904 - FAC1 - Radiated Emissions			
20341	Digital Multimeter Fluke 112	Fluke Deutschland GmbH	81650455	2022-May-25
20489	EMI Test Receiver ESU40	Rohde & Schwarz Messgerätebau GmbH	1000-30	2021-May-13
20254	High Pass Filter 5HC 2600/12750-1.5KK (GSM1800/1900/DECT)	Trilithic	23042	
20868	High Pass Filter AFH-07000	AtlanTecRF	16071300004	
20291	High Pass Filter WHJ 2200-4EE (GSM 850/900)	Wainwright Instruments GmbH	14	
20020	Horn Antenna 3115 (Subst 1)	EMCO Elektronik GmbH	9107-3699	2021-Jul-19
20302	Horn Antenna BBHA9170 (Meas 1)	Schwarzbeck Mess-Elektronik OHG	155	2023-Apr-15
20549	Log. Per. Antenna HL025	Rohde & Schwarz Messgerätebau GmbH	1000060	2021-Jul-31

ID	Description	Manufacturer	SerNo	Cal due date
20720	Measurement Software EMC32 [FAC]	Rohde & Schwarz Messgerätebau GmbH	V10.xx	
20512	Notch Filter WRCA 800/960-02/40-6EEK (GSM 850)	Wainwright Instruments GmbH	24	
20290	Notch Filter WRCA 901,9/903,1SS (GSM 900)	Wainwright Instruments GmbH	3RR	
20122	Notch Filter WRCB 1747/1748 (GSM 1800)	Wainwright Instruments GmbH	12	
20121	Notch Filter WRCB 1879,5/1880,5EE (GSM 1900)	Wainwright Instruments GmbH	15	
20448	Notch Filter WRCT 1850.0/2170.0-5/40-10SSK (WCDMA-FDD II)	Wainwright Instruments GmbH	5	
20066	Notch Filter WRCT 1900/2200-5/40-10EEK (WCDMA - FDDI)	Wainwright Instruments GmbH	5	
20449	Notch Filter WRCT 824.0/894.0-5/40-8SSK (WCDMA FDD V)	Wainwright Instruments GmbH	1	
20611	Power Supply E3632A	Agilent Technologies Deutschland GmbH	KR 75305854	
20338	Pre-Amplifier 100MHz - 26GHz JS4-00102600-38-5P	Miteq Inc.	838697	
20484	Pre-Amplifier 2,5GHz - 18GHz AMF-5D-02501800-25-10P	Miteq Inc.	1244554	
20287	Pre-Amplifier 25MHz - 4GHz AMF-2D-100M4G-35-10P	Miteq Inc.	379418	
20670	Radio Communication Tester CMU200	Rohde & Schwarz Messgerätebau GmbH	106833	2022-Jun-16
20690	Spectrum Analyzer FSU	Rohde & Schwarz Messgerätebau GmbH	100302/026	2021-May-23
20439	Ultrabroadband-Antenna HL562	Rohde & Schwarz Messgerätebau GmbH	100248	2023-Mar-10
	120907 - FAC2			
20836	1-18 GHz Amplifier	Wright Technologies, Inc., Inc.	0001	
20005	AC - LISN 50 Ohm/50µH ESH2-Z5	Rohde & Schwarz Messgerätebau GmbH	861741/005	2021-May-13
20910	Frequency Multiplier 936VF-10/385	MI-Wave, Millimeter Wave Products Inc.	142	
20911	Frequency Multiplier 938WF-10/387	MI-Wave, Millimeter Wave Products Inc.	141	
20730	FS-Z110	Rohde & Schwarz Messgerätebau GmbH	101468	2023-Jun-19
20729	FS-Z140	Rohde & Schwarz Messgerätebau GmbH	101004	2023-May-26
20731	FS-Z75	Rohde & Schwarz Messgerätebau GmbH	101022	2022-Jun-16
20733	Harmonic Mixer FS-Z220	RPG-Radiometer Physics GmbH	101009	
20734	Harmonic Mixer FS-Z325	RPG-Radiometer Physics GmbH	101005	
20811	Horn Antenna ASY-SGH-124-SMA	Antenna Systems Solutions S.L	29F14182337	2021-Oct-08

ID	Description	Manufacturer	SerNo	Cal due date
20877	JS42-08001800-16-8P Verstärker	Miteq Inc.	2079991 / 2079992	
20912	Low noise Amplifier Module 0.5-4GHz	RF-Lambda Europe GmbH	19041200083	
20913	Phase Amplitude Stable Cable Assembly DC-40GHz	RF-Lambda Europe GmbH	AC19040001	
20814	Pickett-Potter Horn Antenna FH-PP 140	RPG-Radiometer Physics GmbH	10008	
20767	Pickett-Potter Horn Antenna FH-PP 140-220	RPG-Radiometer Physics GmbH	010011	
20812	Pickett-Potter Horn Antenna FH-PP-325	RPG-Radiometer Physics GmbH	10024	
20816	SGH Antenna SGH-26-WR10		1144	
20732	Signal- and Spectrum Analyzer FSW67	Rohde & Schwarz Messgerätebau GmbH	104023	2021-May-27
20909	Waveguide Horn Antenna PE9881-24	Pasternack Enterprises, Inc.	37/2016	
20908	Waveguide WR 10 attenuator STA-30-10-M2	SAGE Millimeter Inc.	13256-01	
20907	Waveguide WR-15 attenuator STA-30-15-M2	SAGE Millimeter Inc.	13256-01	
20817	WR-22 Horn / SAR-2309-22-S2	SAGE Millimeter Inc.	13254-01	2023-Jul-29
	120910 - Radio Laboratory 1 (TS 8997)			
20692	Bluetooth Tester CBT 32	Rohde & Schwarz Messgerätebau GmbH	100236	
20904	Climatic Chamber ClimeEvent C/1000/70a/5	Weiss Umwelttechnik GmbH	5822622324001 0	2021-May-09
20871	NRP-Z81	Rohde & Schwarz Messgerätebau GmbH	104631	2021-Mar-24
20872	NRX Power Meter	Rohde & Schwarz Messgerätebau GmbH	101831	2022-Jan-28
20805	Open Switch and control Platform OSP B157WX 40GHz 8Port Switch	Rohde & Schwarz Messgerätebau GmbH	101264	2023-May-13
20691	Open Switch and control Platform OSP120	Rohde & Schwarz Messgerätebau GmbH	101056	2023-May-13
20866	Signal Analyzer FSV3030	Rohde & Schwarz Messgerätebau GmbH	101247	2021-Sep-09
20687	Signal Generator SMF 100A	Rohde & Schwarz Messgerätebau GmbH	102073	2022-May-25
20559	Vector Signal Generator SMU200A	Rohde & Schwarz Messgerätebau GmbH	103736	2021-May-22

6 Measurement Uncertainty valid for conducted/radiated measurements

The reported uncertainties are calculated based on the standard uncertainty multiplied with the appropriate coverage factor **k**, such that a confidence level of approximately 95% is achieved. For uncertainty determination, each component used in the concrete measurement set-up was taken in account and it contribution to the overall uncertainty according its statistical distribution calculated.

RF-Measurement	Reference	Frequency range	Calculated uncertainty based on a confidence level of 95%						Remarks
Conducted emissions (U_{CISPR})	-	9 kHz - 150 kHz 150 kHz - 30 MHz	4.0 dB 3.6 dB						-
Power Output radiated	-	30 MHz - 4 GHz	3.17 dB						Substitution method
Power Output conducted	-	Set-up No.	Cel-C1	Cel-C2	BT1	W1	W2	--	
		9 kHz - 12.75 GHz	N/A	0.60	0.7	0.25	N/A	--	-
		12.75 GHz - 26.5 GHz	N/A	0.82	--	N/A	N/A	--	
Conducted emissions on RF-port	-	9 kHz - 2.8 GHz	0.70	N/A	0.70	N/A	0.69	--	N/A - not applicable
		2.8 GHz - 12.75 GHz	1.48	N/A	1.51	N/A	1.43	--	
		12.75 GHz – 18 GHz	1.81	N/A	1.83	N/A	1.77	--	
		18 GHz - 26.5 GHz	1.83	N/A	1.85	N/A	1.79	--	
Occupied bandwidth	-	9 kHz - 4 GHz	0.1272 ppm (Delta Marker)						Frequency error
			1.0 dB						Power
Emission bandwidth	-	9 kHz - 4 GHz	0.1272 ppm (Delta Marker)						Frequency error
	-		See above: 0.70 dB						Power
Frequency stability	-	9 kHz - 20 GHz	0.0636 ppm						-
Radiated emissions Enclosure	-	150 kHz - 30 MHz	5.01dB						Magnetic field strength
		30 MHz - 1 GHz 1 GHz - 18 GHz 18-26.5 GHz	5.83 dB 4.91 dB 5.06 dB						Electrical Field strength

7 Versions of test reports (change history)

Version	Applied changes	Date of release
--	Initial release	2021-Mar-08
--	--	--
--	--	--

End Of Test Report