MODULE DESIGN SPECIFICATION

CANopen Antenna Board

AUTHOR & REVISION HISTORY

Version	Author	Change Description
1	Adriano Melis	First version
2	Adriano Melis	Added statements for FCC and ISED

DOCUMENT APPROVAL

Function	Name	Signature and Date
FW Modules & Platform Manager	Walter Ruzzarin	Firmato da Walter Ruzzarin il 14/11/2019 alle 15:22:43 CET

Contents

Contents 1
1 DEFINITIONS AND ACRONYMS, REFERENCES 2
2 OVERVIEW 3
3 ARCHITECTURE 3
3.1 Performance requirements 5
4 INTERFACES 7
5 RELEVANT USE CASES 7
5.1 Automatic board version detection 7
5.2 On-the-fly RFId tag reading (both versions) 7
5.3 Static RFId reading of two carriers tag Ids (double antenna version) 7
5.4 Firmware update 8
5.5 HTRC110 tag reader configuration 8
6 DESIGN SPECIFICATIONS REFERENCE – MECHANICAL AND ELECTRICAL 8
6.1 CAB mechanical specification 8
6.2 Single antenna electrical specs 10

6.3 Double antenna electrical specs 10
7 DESIGN SPECIFICATIONS REFERENCE – FIRMWARE 11
7.1 FW structure 12
7.2 Tag encoding 12
7.2.1 Carrier tag encoding 12
7.2.2 Rack tag encoding 13
7.3 Signal encoding 13
7.4 CANopen implementation 14
7.5 PDO messages specification 14
7.5.1 RPDO1 messages 14
7.5.2 TPDO1 and TPDO2 messages 15
7.5.3 TPDO3 16
7.6 Error and event codes 17
7.7 Example PDO sequences 18
7.7.1 Continuous read on Antenna A 18
7.7.2 Calibration and continuous reading on antenna A 19
7.7.3 Change active antenna from antenna A to antenna B 20
7.8 Object Dictionary 21
7.8.1 Object Dictionary sections dedicated to Firmware Update 24
8 Appendix – CRCs computation 25
8.1 CRC1 computation 25
8.2 CRC2 computation 26
9 FCC and ISED statements 27
9.1 Warnings 27
9.2 Information to the user statements 27
9.3 Information to user 27
9.4 RF Radiation Exposure statement 28

1 DEFINITIONS AND ACRONYMS, REFERENCES

Name	Definition/description	Reference
ADC	Analog to Digital Converter	
ARM Cortex-M	a group of 32-bit RISC ARM processors intended for use in microcontrollers	https://developer.arm.com/products/processors/cortex-m
CAB	CANopen Antenna Board	This document
CAN	Controller Area Network – a robust field bus and data link level standard used in automotive and industrial environments	https://www.can-cia.org/can-knowledge/

Name	Definition/description	Reference
CANopen	A communication protocol and device profile specification. Based on the CAN data link protocol and physical layer.	Specification CiA 301 is available at https://www.can-cia.org/groups/specifications/
HITAG RFId	A family of devices and tags by NXP semiconductors for low frequency RFId (125 kHz)	https://www.nxp.com/products/identification-and-security/smart-label-and-tag-ics/hitag
HTRC110	The HITAG RFId reader chip used in the CAB	datasheet and application note at http://confluence.inpeco.com/display/HP/Mosaico+Active+Antenna+Semiconductors
PCB	Printed Circuit Board	
PDO	Process Data Object	Light, fast, high priority CANopen message (8-byte datagram)
RFId	Radio Frequency identification. A set of technologies for automatic identification and tracking based on electromagnetic fields	https://en.wikipedia.org/wiki/Radio-frequency_identification
SDO	Service Data Object	Heavier, low priority, reliable and versatile CANopen message. Variable length message.
STM32L462CEU6	The microcontroller which controls the CAB	datasheet and reference manuals available at http://confluence.inpeco.com/display/HP/Mosaico+Active+Antenna+Semiconductors
TLA	Total Laboratory Automation	The set of laboratory automation technologies and appliances created and provided by Inpeco
UART	Universal Asynchronous Receiver-Transmitter	

2 OVERVIEW

The CANopen Antenna Board (CAB) is a CANopen device embodied by a single PCB (printed circuit board) which reads HITAG RFId tags from TLA tube carriers or racks and sends the decoded identifiers to its CANopen master node.

The CAB is developed in two versions based on the same PCB, populated differently:

1. Single antenna CAB: designed and fine-tuned to read HITAG tags on-the-fly; reads statically equally well.
2. Double antenna CAB: designed and fine-tuned for static HITAG RFId readings. The antenna axes are distant 40 mm (carrier step). N double antenna CABs can be physically and electrically connected to form a linear array of antennas separated by 40-mm gaps, creating 2*N contiguous reading points.

3 ARCHITECTURE

The architectures of the two version of CAB are shown in figures 3 and 4. The architecture elements are:

- STM32L462CEU6 MCU (Micro Controller Unit) by STMicroelectronics, based on ARM Cortex-M M4 processor core. It runs the device firmware, which decodes the RFId tags using the HITAG reader chip and communicates with the CANopen master node on the CAN bus through the CAN

transceiver chip. The MCU is connected to an ASTMLPA-16.000MHz standard clock oscillator for precise clock reference.

- CAN transceiver – it provides the physical interface between the MCU CAN controller and the physical CAN 2-wire bus.
- HTRC110 HITAG reader chip by NXP. It drives the connected antenna to power the RFId tag, receives the tag contents signal and sends to the CPU the digitized signal to be decoded.
- Power supply – circuit subsystem which regulate and provide the correct supply voltages to the active components of the PCB.
- Antenna select circuit – present only on the double antenna version - connects the desired antenna (A or B) to the HTRC110. It is driven by one digital line from the MCU. On the single antenna version board the HITAG reader chip is connected directly to antenna A.
- Antenna A and, on the double antenna version, Antenna B are the coil antennas which energize the RFId tag(s) and receive data from them.

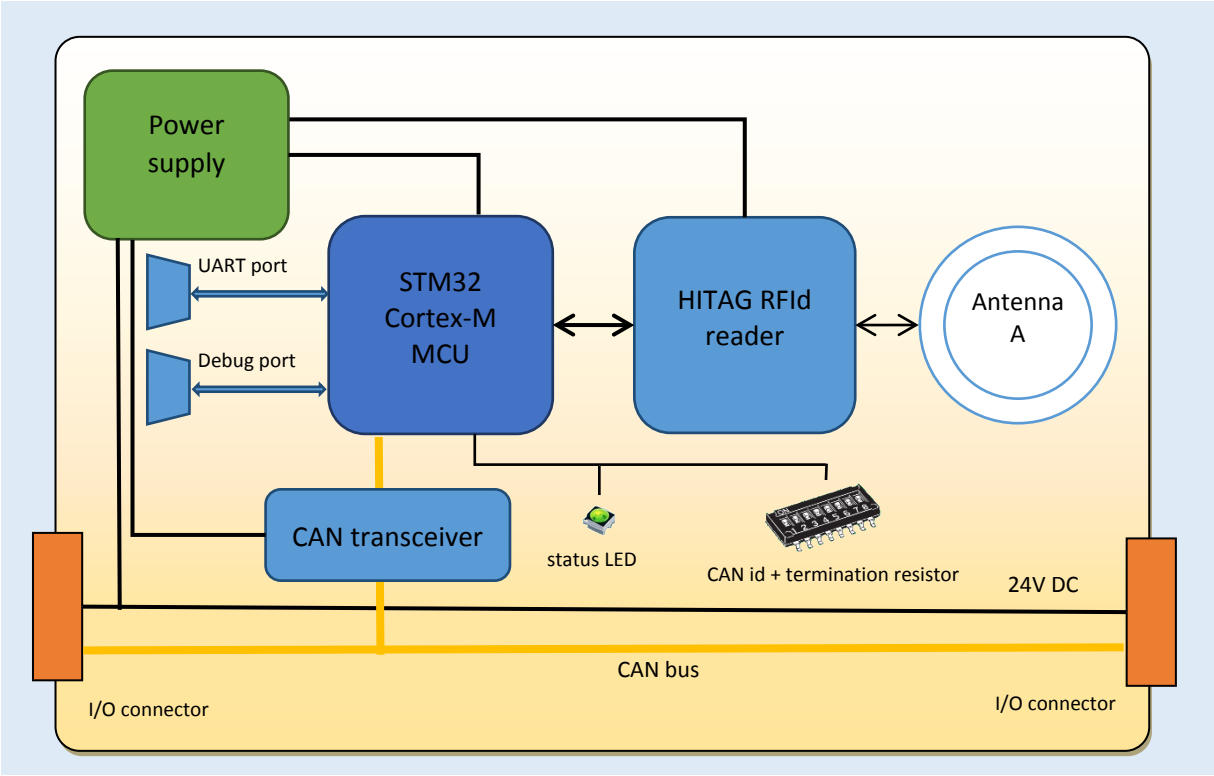

Figure 1. Single Antenna CAB schema

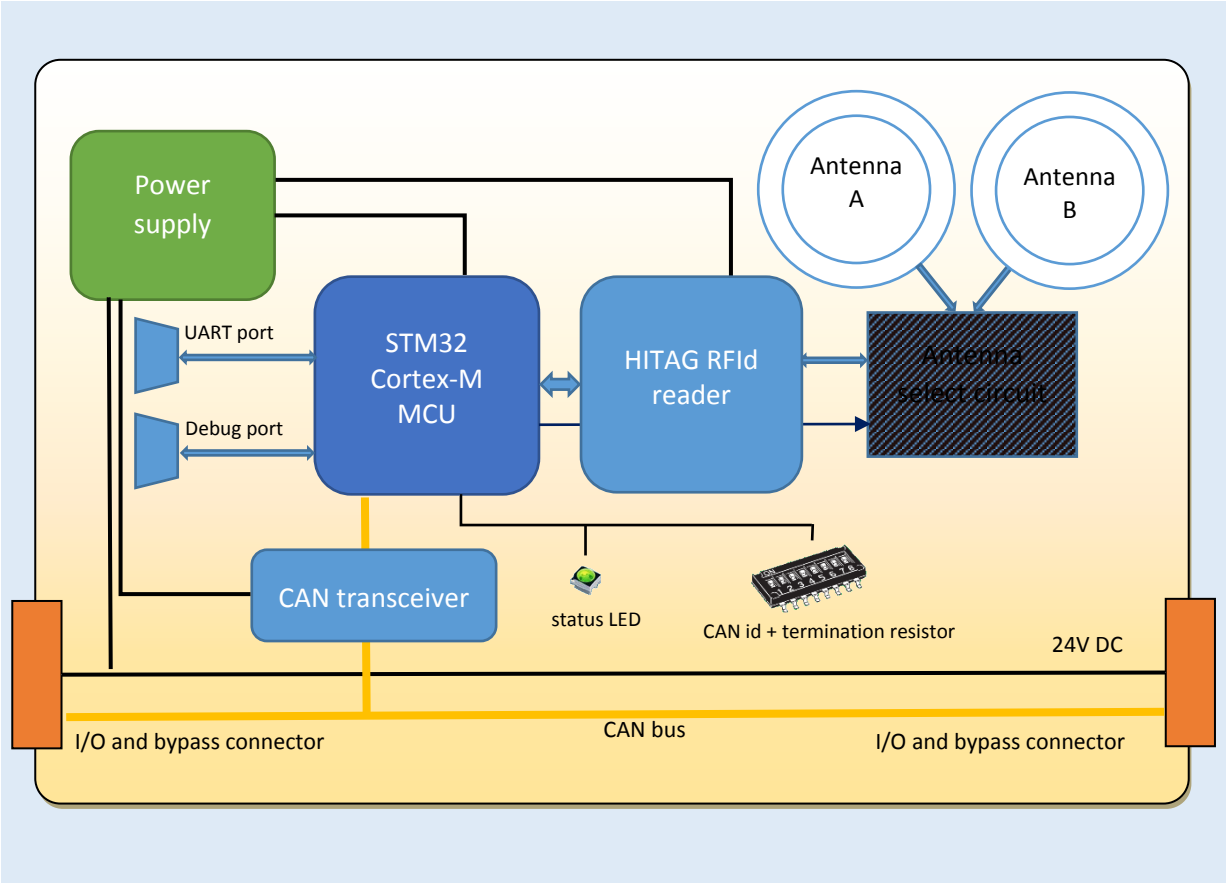

Figure 2. Double antenna CAB schema

3.1 Performance requirements

- The required maximum read failure rate for PCF7931 tags is 0.3 PPM (3 failed reads every 10^7) for both CAB versions. Failure rate is estimated with the following tests:
  - on-the-fly read: consecutive read of at least 30M passages of 50 tags at standard HT TLA speed (172.5 mm/s ± 5%) in a standard Inpeco sampling point on a test track.
  - static read: at least 30M consecutive alternate readings of 2 carriers of the test Inpeco minitrack according to the figure below (carrier tags A and B are read alternatively). The carrier axes are aligned with the antennas' axes, adjacent carriers do not prevent correct readings (see the carrier C position in figure 5). A read operation is performed every 250 ms.
  - The required failure rates must not be exceeded in presence of neighboring antennas. Minimum distances in mm are shown in the potentially critic layouts shown in figure 6.

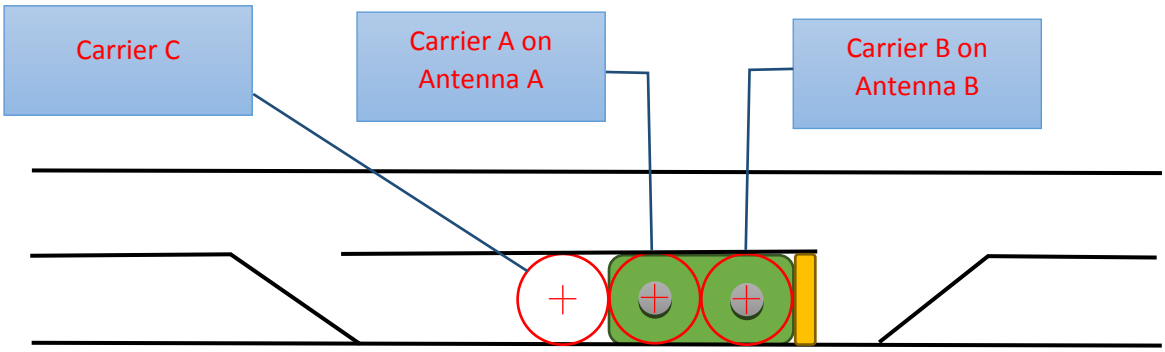

Figure 3. Schematic layout of the static read test configuration, double antenna CAB mounted under the transport belt

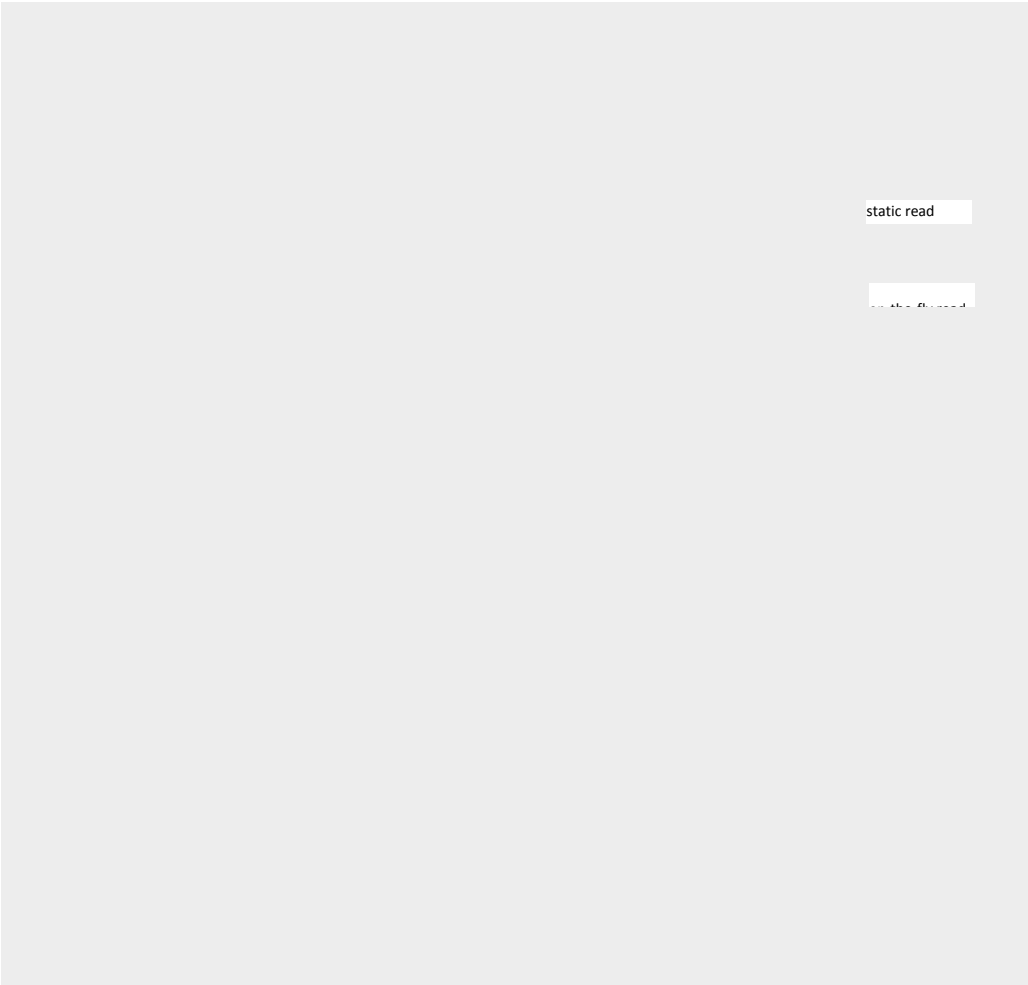

Figure 4. Potentially critic layouts

4 INTERFACES

The CAB has three hardware communication interfaces:

- During normal operation the CAB communicates with other devices through the **CAN port**. The default bit rate is 500 kbit/s.
- The CAB MCU is programmed through the **debug/programming port**, which is accessed on the PCB with test points. The port is connected to through a customized testbed of nails during firmware development/debugging, and in production for factory programming.
- The MCU has an **UART port**, accessible through test points, which can be connected during firmware development for tracing and debugging purposes via the testbed of nails. The UART is not used during normal operation.

From the system perspective the CAB is a CANopen node slave device. Therefore:

- the FW application has the role of a slave CANopen node configured and queried via SDO messages to/from its Object Dictionary.
- PDO messages are used to support the normal operativity of the device itself.
- A PDO message is named Received PDO (RPDO) when received by CAB.
- A PDO message is named Transmitted PDO (TPDO) when transmitted by CAB.

5 RELEVANT USE CASES

5.1 Automatic board version detection

The CAB firmware application auto detects the single/double antenna version. Therefore, if a received command can be applied only to one of the two versions, the appropriate error or warning message will be sent to the CANopen master.

HW version, firmware application versions and other vendor information can also be read from the CAB CANopen Object Dictionary with SDO transactions.

5.2 On-the-fly RFId tag reading (both versions)

During on-the-fly reading the carriers run normally on the lane. The CAB is online and one antenna is active. The CAB sends a ***new carrier identified on antenna #*** TPDO message containing the carrier tag Id just after the decoding. A ***carrier has leaved antenna #*** TPDO message with the same tag Id is sent just after the RFId leaves the antenna reading range.

5.3 Static RFId reading of two carriers tag Ids (double antenna version)

In this use case the antennas are initially inactive (off). When the system has two carriers positioned and centered above the two antennas the operating sequence will be:

1. activate antenna A with a RPDO1 message: the CAB will send two TPDO3s: the first one signaling antenna A is changing state, the second one signaling antenna A activation is complete. CAB then decodes the RFId tag and sends the carrier Id packed in a TPDO1 message;
2. deactivate antenna A with a RPDO1 message: a TPDO3 signaling antenna A deactivation is sent;
3. then CAB sends a TPDO1, signaling tag 1 Id is not read anymore.

4. activate antenna B with a RPDO1 message: the CAB will send two TPDO3s: the first one signaling antenna B is changing state, the second one signaling antenna B activation is complete. CAB then decodes the RFId tag and sends the carrier Id packed in a TPDO2 message;
5. deactivate antenna B with a RPDO1 message: a TPDO3 signaling antenna B deactivation is sent;
6. then CAB sends a TPDO2 signaling tag 1 Id is not “read” anymore.

5.4 Firmware update

In this use case the CANopen master sends the new firmware package using SDO messages and reads with SDO messages the status of the update progress. After receiving the complete package the CAB FW performs the necessary consistency and integrity checks, then the CAB FW is ready to receive a reboot command, which will trigger reboot and the FW update sequence on the MCU FLASH. After the reboot the CAB firmware is ready to operate.

The FW update sequence can be repeated as needed during the normal operational life of the CAB.

5.5 HTRC110 tag reader configuration

The HTRC110 reader chip is configured each time an antenna is activated. This ensures that all the HTRC parameters values accessible in the Object Dictionary are used as desired during tag decoding.

In simplified form a reconfiguration sequence is:

1. deactivate antennas with a RPDO1 message;
2. write the HTRC110 parameters values as desired in the relevant OD entries using SDO messages;
3. activate the desired antenna with a TPDOn message.

6 DESIGN SPECIFICATIONS REFERENCE – MECHANICAL AND ELECTRICAL

6.1 CAB mechanical specification

The following mechanical specifications are mandatory requirements for both versions:

1. CAB can be mounted inside the track profile of Inpeco automation systems.
2. CABs single and double antenna version are produced using the same PCB populated differently
3. The dimensions must be as small as possible, with the following limits:
4. Maximum width 20 mm;
5. Maximum length 80 mm;
6. PCB thickness 1 mm (39-40 mil)
7. Top components maximum height 8 mm
8. Bottom components maximum height 4 mm
9. The PCB is designed to have the double antenna with antennas axes at a distance of 40 mm (carrier step).
10. The PCB has asymmetric mounting buttonholes to ensure correct mounting direction during FW programming and field encasing in the plastic support
11. the PCB has an etched arrow to show belt direction

Double antenna version requirements follow:

12. N double antenna CABs can be physically and electrically connected to form a linear array of antennas separated by 40-mm gaps, creating 2*N contiguous sampling points

13. the plastic support has retention joint to ensure mechanical support between CABs and to prevent inverted array mounting

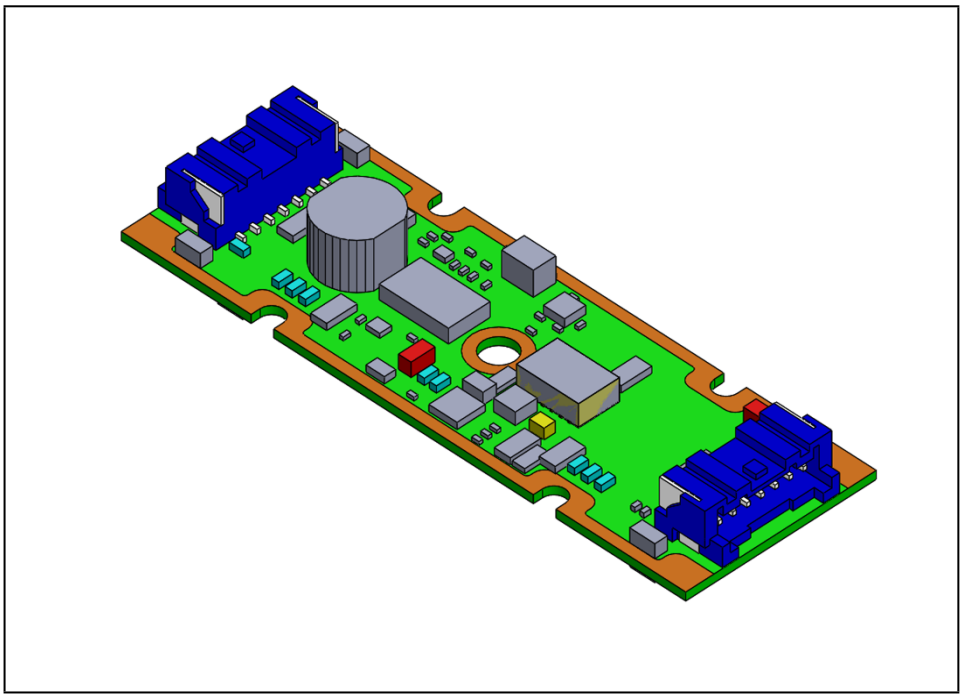

Figure 5. 3D model of single antenna CAB

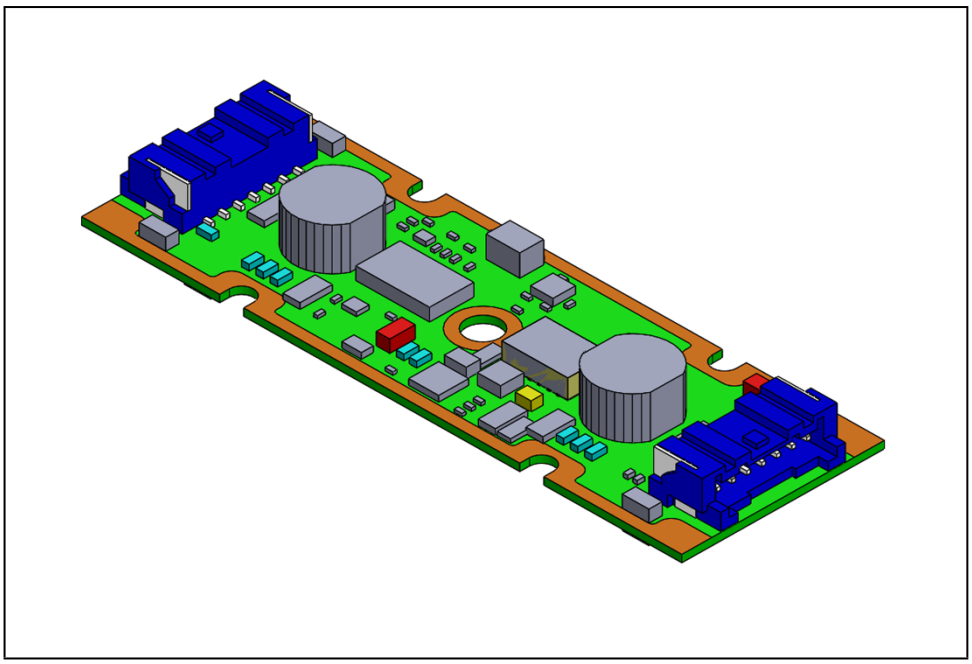

Figure 6. 3D model of double antenna CAB

6.2 Single antenna electrical specs

1. Two identical retention connectors on the short edges of the TOP side, for CAN bus and 24 V power supply; the connector will be JST mod. SM07B-PASS-1 (smt 7 pole side entry type header);

2. The CAB system allows the cascading connection of up to 32 units connected through cabling length of maximum 6 m, providing full power supply and CAN bus connectivity;

3. The power supply to the CAB will be 24 V Dc ± 20% minus voltage drop on cabling. A switching power unit on board is hence required;

4. The maximum estimated maximum input current is 200 mA on the 5V power rail of the CAB (137 mA for the HITAG reader plus 63 for other electronics), equivalent to 1 W. Powering each CAB with 24 V DC – 20% (19.2 V) the maximum input power will be 60 mW per CAB. With this consumption on 6 m / 0.14 sq. mm cabling for 32 CABs (non-distributed worst case) the voltage drop is 3.2 V. The switching power unit must be scaled on these input characteristics.

5. The PCB has a miniaturized horizontal dip-switch with 6 lines, 5 for the CAN Id setting and 1 for the connection of the 120 Ω termination resistor on the CAN bus. The indexes of the switches are the bit indexes, ON switch means 1, OFF switch means 0. For example: SW1 in configuration ON-ON-OFF-OFF-ON encodes node Id = 0b10011 = 0x0B = 11.

6. The PCB has a status green LED visible when a carrier is centered above the coil antenna. The status of the LED is specified in the firmware section,

7. An electric malfunction of one CAB does not prevent the CAN communication and the power supply to other CABs connected before and after the defective CAB. The CANopen tree master will identify the defective CAB, the malfunctioning is managed on the CAN bus and on the power supply bus.

8. CAB uses the MCU internal watchdog to resolve catastrophic failures.

9. The CAB has test point pads which expose the debug port of the MCU. The port is used during firmware development and to load the factory firmware application on the MCU FLASH memory during production.

10. The CAB PCB design documentation is completely available: circuit diagram, routing, BOM, GERBER, in native format and PDF format.

11. Components are chosen according to Automotive Standards (10 yrs. availability min.)

12. All components except MCU and HITAG decoder are chosen to guarantee second-source supply.

6.3 Double antenna electrical specs

1. Two identical retention connectors on the short edges of the TOP side, for CAN bus and 24 V power supply; the connector will be JST mod. SM07B-PASS-1 (smt 7 pole side entry type header);

2. Two identical Socket Strip connectors on the bottom side for CAN bus and power transfer between CABs in array configuration

    a. connectors are SAMTEC mod. MMS-107-02-F-SH (smt 7 poles socketstrip).

3. The connection between two CABs is made by a SAMTEC mod. MTMM-107-07-F-S-200 bridge (see fig. 5)

4. The CAB system allows the cascading connection of up to 32 units connected through cabling length of maximum 6 m, providing full power supply and CAN bus connectivity;

5. The power supply to the CAB will be 24 V Dc ± 20% minus voltage drop on cabling. A switching power unit on board is hence required;

6. The maximum estimated maximum input current is 360 mA on the 5V power rail of the d.a. CAB (275 mA for the HITAG reader plus 65 mA for other electronics), equivalent to 1.7 W. Powering each CAB with 24 V DC – 20% (19.2 V) the maximum input current will be 100 mA per CAB. The switching power unit must be scaled on these figures according to the number of MMAs connected.

7. The PCB has a miniaturized horizontal dip-switch with 6 lines, 5 for the CAN Id setting and 1 for the connection of the 120 Ω termination resistor on the CAN bus. The indexes of the switches are the bit indexes, ON switch means 1, OFF switch means 0. For example: SW1 in configuration ON-ON-OFF-OFF-ON encodes node Id = 0b10011 = 0x0B = 11.

8. The PCB has a status green LED visible when a carrier is centered above the coil antenna. The status of the LED is specified in the firmware section,

9. An electric malfunction of one CAB does not prevent the CAN communication and the power supply to other CABs connected before and after the defective CAB. The CANopen tree master will identify the defective CAB, the malfunctioning is managed on the CAN bus and on the power supply bus.

10. CAB uses the MCU internal watchdog to resolve catastrophic failures.

11. The CAB has test point pads which expose the debug port of the MCU. The port is used during firmware development and to load the factory firmware application on the MCU FLASH memory during production.

12. The CAB PCB design documentation is completely available: circuit diagram, routing, BOM, GERBER, in native format and PDF format.

13. Components are chosen according to Automotive Standards (10 yrs. availability min.)

14. All components except MCU and HITAG decoder are chosen to guarantee second-source supply.

7 DESIGN SPECIFICATIONS REFERENCE – FIRMWARE

Software Design Specifications - CANopen Antenna Board				
ID	**Text**	**Components**	**Project Name**	**Notes**
CAB-32	*CANopen Antenna Board shall decode carrier tags and rack tags*	*NA*	*CANopen Antenna Board*	*N/A*
CAB-24	*CAB FW shall implement PDOs extending SFD-XMOLA.01 description*	*NA*	*CANopen Antenna Board*	*N/A*
CAB-20	*Active Antenna FW shall extend OD entries described in SFD-XMOLA.01*	*NA*	*CANopen Antenna Board*	*N/A*
CAB-22	*CAB OD entries common with Cortex boards shall have standard mapping*	*NA*	*CANopen Antenna Board*	*N/A*
CAB-27	*CANopen Antenna shall read two tags statically (with carriers flow stopped)*	*NA*	*CANopen Antenna Board*	*N/A*
CAB-21	*CAB FW shall provide a sampling time calibration command*	*NA*	*CANopen Antenna Board*	*N/A*
CAB-17	*Active Antenna FW provides access to HTRC110 parameters in OD*	*NA*	*CANopen Antenna Board*	*N/A*
CAB-26	*CANopen Antenna shall read RFId tags contents on-the-fly*	*NA*	*CANopen Antenna Board*	*N/A*
CAB-18	*CANopen Antenna Object Dictionary shall expose expose standard device info via SDO messages*	*NA*	*CANopen Antenna Board*	*N/A*
CAB-25	*CANopen Antenna shall be able to read RFId tags statically (with carrier flow stopped))*	*NA*	*CANopen Antenna Board*	*N/A*
CAB-23	*Canopen Antenna Board FW shall run on CAB V3 and following*	*NA*	*CANopen Antenna Board*	*N/A*
CAB-19	*Active Antenna FW shall send an error message for power anomalies*	*NA*	*CANopen Antenna Board*	*N/A*
CAB-28	*aa_board: implement update chunk size variable in OD*	*NA*	*CANopen Antenna Board*	*N/A*

7.1 FW structure

The FW application is implemented with FreeRTOS tasks. The following jobs are performed by each task:

- A task manages the CANopen node implementation. This task is also responsible of the application update service;
- A task manages the HTRC110 programming and tag decoding with the help of an interrupt capture timer handler;
- A task reads periodically the 3 ADC channels connected to the power supply distribution on the PCB. Another channel of the ADC is connected to the MODE pin of the HTRC110, to read the analog signal from the antenna, used to calibrate the best value for the antenna signal sampling time.

7.2 Tag encoding

The tags are programmed to carry 16 bytes of information, transmitted cyclically when the tag is energized. A carrier Id is an unsigned 32-bit integer. Considering the 16 bytes of payload, transmission/reception is in LSB/lsb order.

7.2.1 Carrier tag encoding

The tag contents for a tube carrier is outlined in the following table:

B0	B1	B2	B3	B4	B5	B6	B7	B8	B9	B10	B11	B12	B13	B14	B15
0xFF	0xFF	0xFF	0xFF	0xFF	0x5A	Id3	Id2	Id1	Id0	CRC1	Id3	Id2	Id1	Id0	CRC2

- Bytes 0-4 are all ones (can be used as synchronization preamble)
- 0x5A in byte 5 is a marker (sync pattern) used to detect the start of the meaningful sequence
- Bytes 6-9 carry bytes 3-0 of the carrier unique Id, which is transmitted in MSB order
- Byte 10 contains CRC1, a cyclic redundancy check computed on bytes 5-9 (algorithm in Appendix)
- Bytes 11-14 contain a replica of the tag Id
- Byte 15 contains CRC2, computed with another algorithm on bytes 11-14 (algorithm in Appendix)

7.2.2 Rack tag encoding

The tag contents for a tube rack is outlined in the following table:

B0	B1	B2	B3	B4	B5	B6	B7	B8	B9	B10	B11	B12	B13	B14	B15
Id3	Id2	Id1	Id0	CRC2	0x55	0x55	0x55	0x55	0x55	0x55	Id3	Id2	Id1	Id0	CRC2

- Bytes 0-3 carry bytes 3-0 of the rack unique Id, which is transmitted in MSB order
- Byte 4 contains CRC2, computed with the CRC2 algorithm on bytes 0-3 (algorithm in Appendix)
- Bytes B0-B4 could contain the value 0x55 on some legacy racks
- Bytes 5-10 contain the value 0x55
- Bytes 11-14 contain bytes 3-0 of the rack unique Id, which is transmitted in MSB order
- Byte 15 contains CRC2, computed with the CRC2 algorithm on bytes 11-14 (algorithm in Appendix)

NOTE: The content always present is in bytes B5-B15 so the decoding will be performed on the second copy of the meaningful content.

7.3 Signal encoding

The HITAG digital signal to the MCU encodes the information as time intervals between signal edges:

- 1 is encoded by two edges separated by a 512 µs nominal interval (full-one-bit);
- 0 is encoded by two double edges, separated by a 256 µs nominal interval (two half-zero-bits).

The signal is a threshold digitization of the analog antenna signal, so an **interval tolerance** is used to decide if the measured time between signal edges is to be considered valid during decoding.

Example: if the interval tolerance is 30 µs, a valid half-zero interval duration is 256±30 µs, a valid full-one interval duration is 512±30 µs. In practice: two edges separated by 203 µs will be considered unacceptable, while two edges separated by 242 µs will be considered a valid half-zero-bit.

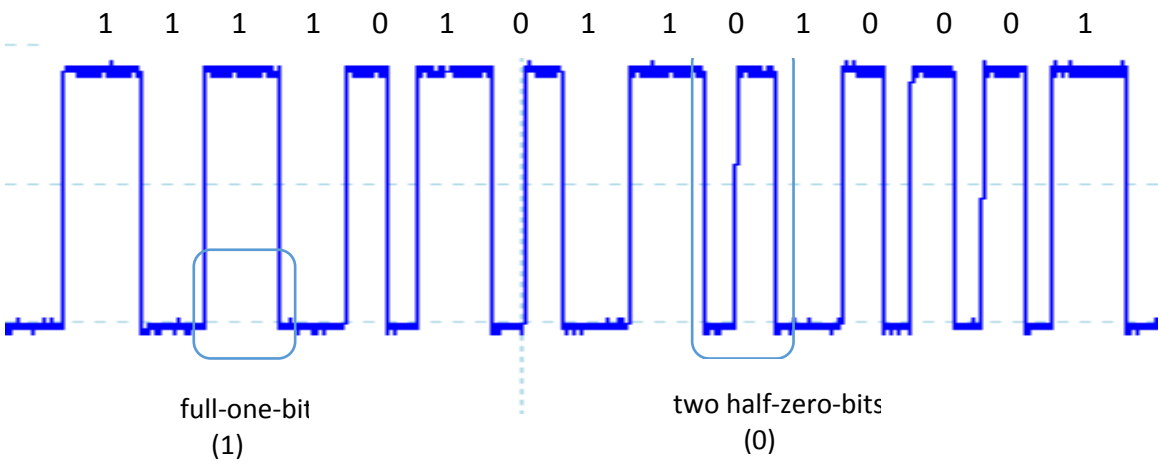

Figure 7. a portion of the signal from HTRC110 to the MCU which carries the tag content and the corresponding encoding

7.4 CANopen implementation

The CAB firmware application implements a CANopen slave device according to CiA 301. Because one of the purposes of the CAB is the fastest and more accurate carrier identification possible, the carrier identification process is managed and communicated through PDO messages, lighter and faster than SDO messages.

The configuration of the firmware is exposed in the Object Dictionary (for example all the HTRC110 HITAG reader parameters are r/w entries of the OD), and can be manipulated by the Master node of the CANopen network as needed.

7.5 PDO messages specification

7.5.1 RPDO1 messages

RPDO1 messages, received by the CAB, carry the process command to the CAB. The requested operations are activation/deactivation of one antenna, start of the HITAG sampling time calibration procedure, and so on.

There are some remarks about the commands:

- On the single antenna CAB commands for antenna B are not valid;
- On the double antenna CAB is possible to activate only one antenna at a time, because the HITAG decoder chip is unique.
- To change the active antenna on the double antenna CAB the antenna currently active must be set OFF.

RPDO1							
B0	B1	B2	B3	B4	B5	B6	B7
Unused	Command	Unused	Unused	Unused	Unused	Unused	Unused

	byte						

The command byte is structured in two nibbles:

CAB commands byte							
b7	b6	b5	b4	b3	b2	b1	b0
Antenna B command				Antenna A command			

so the command table is the following (complete command byte):

CAB commands		
name	value	description
CMD_NULL	0x00	null command
CMD_ANT_OFF	0x11	antennas off
CMD_ANT_A_ON	0x12	antenna A on: set up HTRC110, then start continuous reading on antenna A
CMD_ANT_B_ON	0x21	antenna B on: set up HTRC110, then start continuous reading on antenna B
CMD_ANT_A_CALIB	0x13	calibrate/start antenna A: set up HTRC110, calibrate AA, start continuous reading on antenna A
CMD_ANT_B_CALIB	0x31	calibrate/start antenna B: set up HTRC110, calibrate AB, start continuous reading on antenna B

7.5.2 TPDO1 and TPDO2 messages

TPDO 1 and 2 are sent by CAB to communicate read events on the antenna A or B (no TPDO2 is sent by the single antenna CAB) respectively. B4 value is 0x01 when a new tag has just ben read, is 0x00 when the tag leaves the antenna detection range or the antenna has been deactivated with the tag still in detection range.

TPDO1							
B0	B1	B2	B3	B4	B5	B6	B7
Carrier Id read on Antenna A				Presence on AA	CRC	Error/warning byte 0	Error/warning byte 1
LSB	…	…	MSB	1/0	CRC value	LSB	MSB

TPDO2

B0	B1	B2	B3	B4	B5	B6	B7
Carrier Id read on Antenna B				Presence on AB	CRC	Error/warning byte 0	Error/warning byte 1
LSB	…	…	MSB	1/0	CRC value	LSB	MSB

7.5.2.1 TPDO1s Example

TPDO1							
B0	B1	B2	B3	B4	B5	B6	B7
0xC9	0xC7	0x05	0x44	0x01	0xC0	0x00	0x00

The tag with Id 0x4405C7C9 has been read on antenna A, the CRC is 0xC0, no error

TPDO1							
B0	B1	B2	B3	B4	B5	B6	B7
0xC9	0xC7	0x05	0x44	0x00	0xC0	0x00	0x00

The tag with Id 0x4405C7C9 has left antenna A, the CRC is 0xC0, no error

7.5.3 TPDO3

TPDO3 messages are sent by CAB to communicate a state change. For example, a TPDO3 is sent when one of the antennas is activated or deactivated, when the autocalibration of the sampling time is completed, when the power voltage goes under the (nominal 24 V value – 20%) threshold and so on.

TPDO3							
B0	B1	B2	B3	B4	B5	B6	B7
Unused	Antennas status	Unused	Unused	Error/warning byte 0	Error/warning byte 1	Unused	Unused

Antennas status are encoded in Byte 1, the lower 4-bit nibble encodes Antenna A status, the higher 4-bit nibble encodes Antenna B status (if present):

Antennas status							
b7	b6	b5	b4	b3	b2	b1	b0
Antenna B status				Antenna A status			

Possible antenna information nibble values:

- 0b0000 – Antenna is changing state (calibration is in progress, switching on/off is in progress, etc.)
- 0b0001 – Antenna off
- 0b0010 – Antenna on

Status byte examples:

- Byte 1 = 0x11: both antennas are off
- Byte 1 = 0x21: antenna B on, antenna A off
- Byte 1 = 0x22: impossible (both antennas active)
- Byte 1 = 0x10: antenna A is changing state, antenna B is off

7.6 Error and event codes

This is the error / event codes table. The code message can be related to an antenna (sent in a TPDO1/2) or related to the CAB system (sent in a TPDO3).

Name	Code	Description
AA_ERROR_NONE	0x0000	No error
AA_ERROR_ANTFAIL	0x0001	Antenna fail
AA_ERROR_CRC	0x0002	CRC computation mismatch
AA_EVENT_CALIB_END	0x0100	Antenna calibration has finished
AA_ERROR_V24_BAD	0x0103	24 V power malfunction. This value is used in a PDO3 sent once when the power voltage goes under 24V-20% (19.2 V). When the power goes above 22.6V (24V – 10%) a PDO3 with AA_ERROR_NONE message is sent to communicate that the power supply voltage has reached a safe value.
AA_ERROR_SINGLE_ANT	0x0104	Cannot execute: single antenna board
AA_ERROR_NOT_READY	0x0105	CAB busy: cannot accept command
AA_ERROR_UNKNOWN_CMD	0x01FF	Unknown command

7.7 Example PDO sequences

For normal usage the CAB starts with optimal default parameters. No calibration is needed unless in a peculiar environment.

A request for antenna activation will be denied if one of the antennas is already active.

7.7.1 Continuous read on Antenna A

The antennas are assumed to be inactive. A single RPDO1 starts continuous reading:

1. RPDO1 [0x00 0x12 0x00 0x00 0x00 0x00 0x00 0x00] is received;
2. TPDO3 [0x00 0x10 0x00 0x00 0x00 0x00 0x00 0x00] is sent (AA is changing state), the tag reader is configured, then Antenna A is activated, then VAB sends TPDO3 0x00 0x12 0x00 0x00 0x00 0x00 0x00 0x00 (AA active);
3. CAB sends a pair of TPDO1s for each carrier passage:
   a. TPDO1 *tag read* 0xC9 0xC7 0x05 0x44 0x01 0xC0 0x00 0x00;
   b. TPDO1 *tag passed* 0xC9 0xC7 0x05 0x44 0x00 0xC0 0x00 0x00.

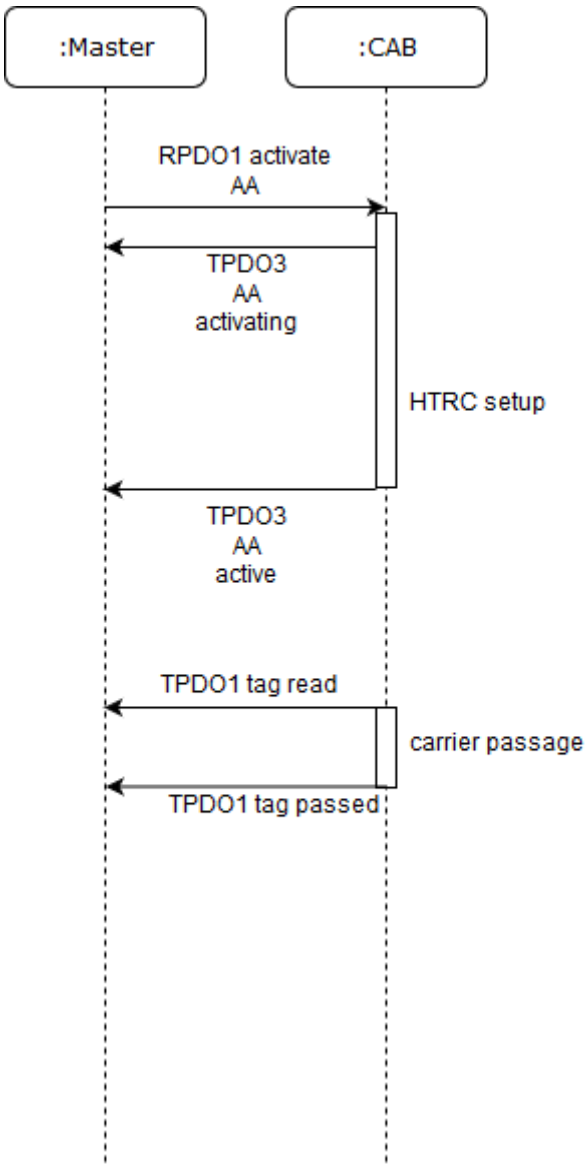

Figure 8. Sequence diagram of AA activation and tag read

7.7.2 Calibration and continuous reading on antenna A

Two RPDO1 are needed: one to deactivate the antennas, one to start calibration and continuous reading. A carrier ***must* be positioned centered above the antenna**, otherwise the calibration will fail, finding a wrong sampling time value, and possibly making the tag decoding impossible without a new, correct calibration.

1. RPDO1 [0x00 0x11 0x00 0x00 0x00 0x00 0x00 0x00] is received (deactivate both antennas);
   a. TPDO3 [0x00 0x11 0x00 0x00 0x00 0x00 0x00 0x00] is sent;
2. RPDO1 [0x00 0x11 0x00 0x00 0x00 0x00 0x00 0x00] is received (calibrate AA)
3. the tag reader is configured and antenna A is connected,
   a. TPDO3 [0x00 0x10 0x00 0x00 0x00 0x00 0x00 0x00] is sent (AA is changing state);
4. CAB executes the sampling time calibration procedure. When the calibration is complete HTRC110 is configured with the best sampling time value, then Antenna is activated and TPDO3 [0x00 0x12 0x00 0x00 0x00 0x00 0x00 0x00] is sent (AB active);

5. TPDO1 *tag read* [0xC9 0xC7 0x05 0x44 0x01 0xC0 0x00 0x00] is sent just after the calibration is completed (a tag is on the antenna);
6. TPDO1 *tag passed* [0xC9 0xC7 0x05 0x44 0x00 0xC0 0x00 0x00] is sent when the tag leaves the antenna.

Remark: *a TPDO3 with status "antenna activated" (0x12 or 0x21) after a calibration command implies a successful calibration procedure.*

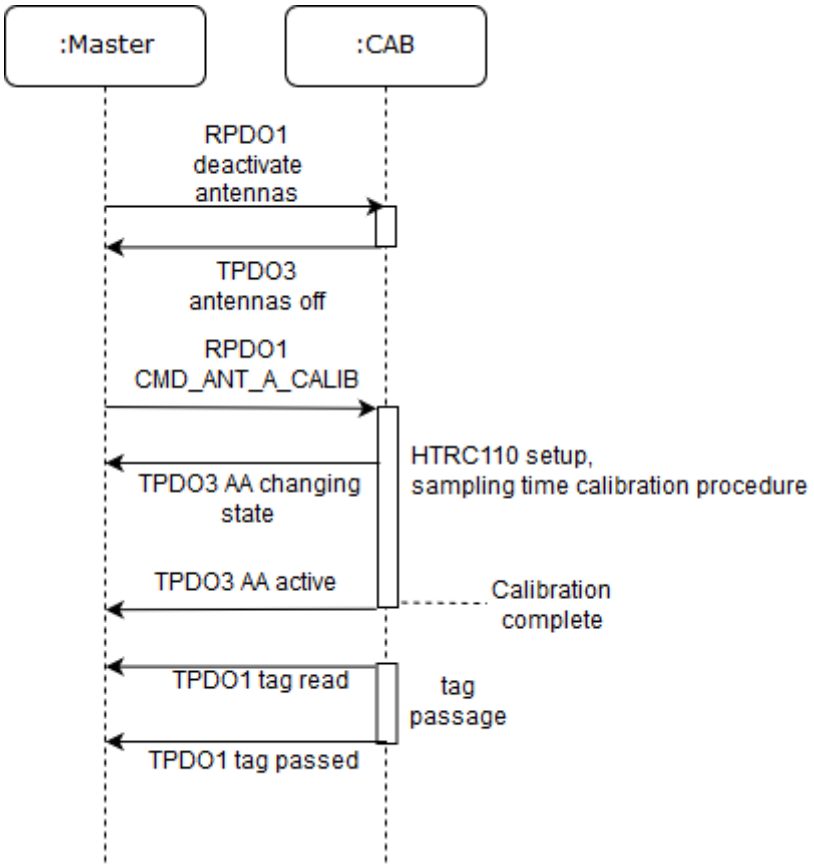

Figure 9. Calibration sequence diagram

7.7.3 Change active antenna from antenna A to antenna B

Assuming antenna B is active the sequence

- RPDO1 [0x00 0x11 0x00 0x00 0x00 0x00 0x00 0x00]
- RPDO1 [0x00 0x12 0x00 0x00 0x00 0x00 0x00 0x00]

will deactivate antenna B, then immediately will activate antenna A.

7.8 Object Dictionary

The Relevant sections of the Object Dictionary of CAB are outlined in the following tables

Standard Communication Parameters					
Index	Subindex	Name	Type	Access	Description
0x1008	1	Manufacturer Device Name	VISIBLE_STRING	RO	E.g. "CAB"
0x1009	1	Manufacturer hardware version	VISIBLE_STRING	RO	E.g. "Rev02"
0x100A	1	Manufacturer software version	VISIBLE_STRING	RO	E.g. "CAB_1-0-1"

Inpeco Device Identification					
Index	Subindex	Name	Type	Access	Description
0x5000	1	Firmware name	VISIBLE_STRING	RO	The name of the project as set in the main cmake file
0x5000	2	Firmware version	VISIBLE_STRING	RO	The firmware version (output of "git describe --tags --dirty")
0x5000	3	Platform version	VISIBLE_STRING	RO	The platform version (based on Cortex tags)
0x5000	4	HW layer name	VISIBLE_STRING	RO	Eg: hw_aa_board / hw_secoboard...
0x5000	5	Build date/time	VISIBLE_STRING	RO	Date/time in UTC of the FW build
0x5000	6	Build engineer	VISIBLE_STRING	RO	User name of the person who did the FW build
0x5000	7	Serial Number of the device	VISIBLE_STRING	RO	Serial number of the unit if available
0x5000	8	MAC Address	OCTET_STRING	RO	MAC address of the Ethernet device, if present, in binary format
0x5000	9	IP Address	OCTET_STRING	RO	IP address currently assigned, in binary format
0x5000	10	Boot-up reason	VISIBLE_STRING	RO	...

Antenna A status					
Index	Subindex	Name	Type	Access	Description
0x2000	1	status_AA_presence	UNSIGNED8	RO	presence on AA
0x2000	2	status_ AA_id	UNSIGNED32	RO	latest Id on AA
0x2000	3	status_ AA_crc	UNSIGNED8	RO	latest CRC on AA (0 if rack tag)
0x2000	4	status_ AA_error	UNSIGNED16	RO	latest error code AA
0x2000	5	status_ AA_counter	UNSIGNED64	RW	number of decoded Ids on AA
Antenna B status					
Index	Subindex	Name	Type	Access	Description
0x2001	1	status_AB_presence	UNSIGNED8	RO	presence on AB
0x2001	2	status_ AB_id	UNSIGNED32	RO	latest Id on AB

0x2001	3	status_ AB_crc	UNSIGNED8	RO	latest CRC on AB (0 if rack tag)
0x2001	4	status_ AB_error	UNSIGNED16	RO	latest error code AB
0x2001	5	status_ AB_counter	UNSIGNED64	RW	number of decoded Ids on AB

Note: on the single antenna version the AB entries will contain always zeroes.

Inpeco Node Info					
Index	Subindex	Name	Type	Access	Description
0x2803	1	node_info_node_command	UNSIGNED16	RO	Inpeco node command
0x2803	2	node_info_node_status	UNSIGNED16	RO	Inpeco node status
0x2803	3	node_info_node_error	UNSIGNED16	RO	Inpeco node error

HTRC110 / decoding configuration parameters					
Index	Subindex	Name	Type	Access	Description
0x4000	1	sampling_time	UNSIGNED8	RW	Sampling time 0 – 63[3]
0x4000	2	hysteresis	UNSIGNED8	RW	Hysteresis on/off[3]
0x4000	3	gain	UNSIGNED8	RW	Gain[3]
0x4000	4	hipass	UNSIGNED8	RW	Hipass freq[3]
0x4000	5	lopass	UNSIGNED8	RW	Lopass freq[3]
0x4000	6	moving_window_on	UNSIGNED8	RW	Moving windows algorithm on/off[1]
0x4000	7	interval_tol	UNSIGNED8	RW	signal interval tolerance width in µs [2]
0x4000	8	calib_request	UNSIGNED8	WR	Sampling time calibration request

Notes:

1. The parameter at index 0x4000/6 (moving_window_on) selects the bit decoding algorithm. The moving window algorithm checks continuously the newest bytes received from the HITAG, attempting to decode them as an Inpeco carrier or rack tag. The value 0 selects the accumulation algorithm: the bits sent by the tag at each transmit cycle are accumulated, relevant bytes are checked for compliant decoding in the two standards (rack/carrier).
2. This is the tolerance for the time between two signal edges during decoding.
3. Read HTRC110 datasheet and application note documents to know how the parameters at subindexes 0x4000/1-5 influence the HTRC110 behavior.

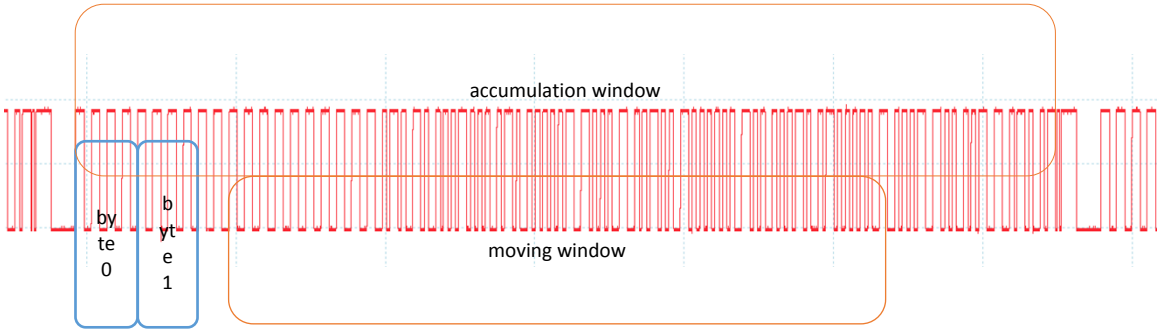

Figure 10. portion of tag signal illustrating the two decoding windows

4. HTRC110 setup parameters are organized in "pages" that can be inspected at index 0x4001:

HTRC110 configuration pages					
Index	Subindex	Name	Type	Access	Description
0x4001	1	htrc110_page[0]	UNSIGNED8	RW	HTRC110 configuration page 0
0x4001	2	htrc110_page[1]	UNSIGNED8	RW	HTRC110 configuration page 1
0x4001	3	htrc110_page[2]	UNSIGNED8	RW	HTRC110 configuration page 2
0x4001	4	htrc110_page[3]	UNSIGNED8	RW	HTRC110 configuration page 3

CAB configuration					
Index	Subindex	Name	Type	Access	Description
0x4003	1	config_is_double	BOOLEAN	RO	True if double antenna, false if single
0x4003	2	config_hw_version	UNSIGNED8	RO	HW version bits read from pins PB6-PB7
0x4003	3	config_selected_antenna	INTEGER8	RO	-1: none; 0: antenna A; 1: antenna B
0x4003	4	config_v_delta_threshold	REAL32	RW	Max delta for the 24V monitor points. if deltaV24 > config_v_delta_threshold a DELTAV_THRESHOLD_EXCEEDED warning is sent
0x4003	5	config_node_id_sw1	UNSIGNED8	RO	node Id as read from bits 0-4 of SW1
0x4003	6	config_decoded_bits	UNSIGNED32	RO	currently decoded bits from the RFId tag
0x4003	7	config_cd_on	BOOLEAN	RO	True if continuous decoding on HTRC110 is on
0x4003	8	config_fw_version	VISIBLE_STRI	RO	STMicroelectronics FW

CAB configuration					
Index	Subindex	Name	Type	Access	Description
			NG		version string used to build this FW program

Raw ADC read values					
Index	Subindex	Name	Type	Access	Description
0x4010	1	v_adc[0]	UNSIGNED32	RO	ADC raw value - antenna analog signal
0x4010	2	v_adc[1]	UNSIGNED32	RO	ADC raw value - V5_MONIT
0x4010	3	v_adc[2]	UNSIGNED32	RO	ADC raw value - V24_MONIT_A
0x4010	4	v_adc[3]	UNSIGNED32	RO	ADC raw value - V24_MONIT_B

ADC voltages values (V at the ADC input pins), mV					
Index	Subindex	Name	Type	Access	Description
0x4011	1	v_mV[0]	UNSIGNED32	RO	ADC value - antenna analog signal at ADC pin
0x4011	2	v_mV[1]	UNSIGNED32	RO	ADC value - V5_MONIT
0x4011	3	v_mV[2]	UNSIGNED32	RO	ADC value - V24_MONIT_A
0x4011	4	v_mV[3]	UNSIGNED32	RO	ADC value - V24_MONIT_B

ADC signal values (V before the voltage dividers), mV					
Index	Subindex	Name	Type	Access	Description
0x4012	1	v_signal[0]	UNSIGNED32	RO	antenna analog signal
0x4012	2	v_signal[1]	UNSIGNED32	RO	V5_MONIT
0x4012	3	v_signal[2]	UNSIGNED32	RO	V24_MONIT_A
0x4012	4	v_signal[3]	UNSIGNED32	RO	V24_MONIT_B

7.8.1 Object Dictionary sections dedicated to Firmware Update

Update page (data chunk) section					
Index	Subindex	Name	Type	Access	Description
0x4020	1	img_page	OCTET_STRING	RW	The byte array that the downloader software will overwrite with each chunk of the new firmware
0x4020	2	img_page_size	UNSIGNED32	RO	The size of the update page. Each chunk must be

Update page (data chunk) section					
Index	Subindex	Name	Type	Access	Description
					transferred with the same chunk size and padding must be used if needed

Update protocol control variables					
Index	Subindex	Name	Type	Access	Description
0x4024	1	update_state	UNSIGNED8	RW	Used by the protocol to control the update process
0x4024	2	update_avail_page_idx	UNSIGNED32	RW	The update page index available at 0x4020/1
0x4024	3	update_md5hash	OCTET_STRING	RW	Used by the protocol to verify transfer correctness - 16 octets

8 Appendix – CRCs computation

8.1 CRC1 computation

The following is a C code snippet showing the CRC1 computation

```
#define DI  0xE0

unsigned char crc8_table[256]; /* 8-bit table */
int tableBuilt = 0;

void initCRCTable(void)
{
    int i, j;
    unsigned char crc;

    if (!tableBuilt) {
          for (i = 0; i < 256; i++) {
                crc = i;
                for (j = 0; j < 8; j++)
                      crc = (crc << 1) ^ ((crc & 0x80) ? DI : 0);
                crc8_table[i] = crc & 0xFF;
          }
          tableBuilt = 1;
    }
}

void crcReset()
{
    pecCrc = 0x80;
}

void crcGenByte(unsigned char dataIn)
{
    pecCrc = crc8_table[pecCrc[idx] ^ dataIn];
    pecCrc &= 0xFF;
}
```

```
used as follows:
    uint8_t payload[6];
    crcReset();
    for (i=0; i<5; i++)
          crcGenByte(payload[i]); // to be compared to B10 == payload[5]
```

8.2 CRC2 computation

CRC2 computing is implemented by the crc2() C function.

```
/*! @brief Compute CRC2
 *  @param pload The payload array
 *  @param start The index of the first byte on which the CRC2 is computed
 *  @param stop The index of the last byte on which the CRC2 is computed
 *  @return The CRC2 value
 */
  uint8_t crc2(uint8_t *pload, int start, int stop)
  {
      uint8_t crc = 0x84;
      uint8_t bMask;
      int i;

      for (i = start; i <= stop; i++) {
            bMask = crc >> 1;
            if (crc % 2) {
                  bMask = bMask | 0x80;
            }
            crc = pload[i] ^ bMask;
      }
      return crc;
  }
```

9 FCC and ISED statements

9.1 Warnings

This device complies with part 15 of the FCC Rules. Operation is subject to the following two conditions:

1. This device may not cause harmful interference, and
2. this device must accept any interference received, including interference that may cause undesired operation.

9.2 Information to the user statements

This equipment has been tested and found to comply with the limits for a Class B digital device, pursuant to part 15 of the FCC Rules. These limits are designed to provide reasonable protection against harmful interference in a residential installation. This equipment generates, uses and can radiate radio frequency energy and, if not installed and used in accordance with the instructions, may cause harmful interference to radio communications. However, there is no guarantee that interference will not occur in a particular installation. If this equipment does cause harmful interference to radio or television reception, which can be determined by turning the equipment off and on, the user is encouraged to try to correct the interference by one or more of the following measures:

- Reorient or relocate the receiving antenna.
- Increase the separation between the equipment and receiver.
- Connect the equipment into an outlet on a circuit different from that to which the receiver is connected.
- Consult the dealer or an experienced radio/TV technician for help.

9.3 Information to user

Changes or modifications not expressly approved by the party responsible for compliance could void the user's authority to operate the equipment.

This device contains licence-exempt transmitter(s)/receiver(s) that comply with Innovation, Science and Economic Development Canada's licence-exempt RSS(s). Operation is subject to the following two conditions:

1. This device may not cause interference.
2. This device must accept any interference, including interference that may cause undesired operation of the device.

L'émetteur/récepteur exempt de licence contenu dans le présent appareil est conforme aux CNR d'Innovation, Sciences et Développement économique Canada applicables aux appareils radio exempts de licence. L'exploitation est autorisée aux deux conditions suivantes:

1. L'appareil ne doit pas produire de brouillage;
2. L'appareil doit accepter tout brouillage radioélectrique subi, même si le brouillage est susceptible d'en compromettre le fonctionnement.

9.4 RF Radiation Exposure statement

This product complies with FCC and ISED radiation exposure limits set forth for an uncontrolled environment. The antenna should be installed and operated with minimum distance of 20 cm between the radiator and your body.

Cet appareil est conforme aux limites d'exposition aux rayonnements de l'ISED pour un environnement non contrôlé. L'antenne doit être installé de façon à garder une distance minimale de 20 centimètres entre la source de rayonnements et votre corps.

*****End of document*****