Harmony XB5R Harmony Wireless Push Buttons

Expert Instruction Sheet

EIO0000000812.06
01/2026

www.se.com

Legal Information

The information provided in this document contains general descriptions, technical characteristics and/or recommendations related to products/solutions.

This document is not intended as a substitute for a detailed study or operational and site-specific development or schematic plan. It is not to be used for determining suitability or reliability of the products/solutions for specific user applications. It is the duty of any such user to perform or have any professional expert of its choice (integrator, specifier or the like) perform the appropriate and comprehensive risk analysis, evaluation and testing of the products/solutions with respect to the relevant specific application or use thereof.

The Schneider Electric brand and any trademarks of Schneider Electric SE and its subsidiaries referred to in this document are the property of Schneider Electric SE or its subsidiaries. All other brands may be trademarks of their respective owner.

This document and its content are protected under applicable copyright laws and provided for informative use only. No part of this document may be reproduced or transmitted in any form or by any means (electronic, mechanical, photocopying, recording, or otherwise), for any purpose, without the prior written permission of Schneider Electric.

Schneider Electric does not grant any right or license for commercial use of the document or its content, except for a non-exclusive and personal license to consult it on an "as is" basis.

Schneider Electric reserves the right to make changes or updates with respect to or in the content of this document or the format thereof, at any time without notice.

To the extent permitted by applicable law, no responsibility or liability is assumed by Schneider Electric and its subsidiaries for any errors or omissions in the informational content of this document, as well as any non-intended use or misuse of the content thereof.

Table of Contents

Safety Information....4
About the Document....5
Cybersecurity....9
- Product Defense in Depth....9
- Potential Risks and Compensating Controls....11
- Secure Installation and Security Hardening....11
- Secure Disposal....11
- Schneider Electric Cybersecurity Support Portal....12

Harmony XB5R Introduction....13
- General Presentation of Harmony XB5R....13
- Presentation of Harmony XB5R Ready to Use Packages....15
- Presentation of XB5R Components....16

Installation....19
- General Installation Instruction for Harmony XB5R....19
- ZBRA3 Passive Antenna....23
- Transmitter and Pushbutton Assembly....24
- Mounting Data for Rope Pull Switch....29
- Mounting Instructions for ZBRM01 Handy Box....30
- Mounting Instructions for ZBRM21/ZBRM22 Mobile Boxes....31
- Mounting instructions For ZBRACS Holder....32
- Receiver Assembly and Disassembly....33
- Receiver Wiring Diagram....37
- Relay Antenna Installation....37

Preparing For Use....43
- Compatibility Rules....43
- Transmitter Types....43
- LED Status....44
- Output modes....45
- Changing outputs from Monostable to Bistable for ZBRRA....49
- Changing Outputs From Monostable to Disable/Enable for ZBRRA....50
- How to Teach/Unteach Monostable, Bistable or Momentary Outputs for ZBRRA, and ZBRRC....52
- How to Teach Disable/Enable Outputs for ZBRRA....54
- Lock/Unlock for ZBRRA and ZBRRC....57

Other Functions for Harmony XB5R....59
- Other Functions Description....59

Safety Information

Important Information

Read these instructions carefully, and look at the equipment to become familiar with the device before trying to install, operate, service, or maintain it. The following special messages may appear throughout this documentation or on the equipment to warn of potential hazards or to call attention to information that clarifies or simplifies a procedure.

The addition of this symbol to a “Danger” or “Warning” safety label indicates that an electrical hazard exists which will result in personal injury if the instructions are not followed.

This is the safety alert symbol. It is used to alert you to potential personal injury hazards. Obey all safety messages that follow this symbol to avoid possible injury or death.

⚠ DANGER

DANGER indicates a hazardous situation which, if not avoided, **will result in** death or serious injury.

⚠ WARNING

WARNING indicates a hazardous situation which, if not avoided, **could result in** death or serious injury.

⚠ CAUTION

CAUTION indicates a hazardous situation which, if not avoided, **could result** in minor or moderate injury.

NOTICE

NOTICE is used to address practices not related to physical injury.

Please Note

Electrical equipment should be installed, operated, serviced, and maintained only by qualified personnel. No responsibility is assumed by Schneider Electric for any consequences arising out of the use of this material.

A qualified person is one who has skills and knowledge related to the construction and operation of electrical equipment and its installation, and has received safety training to recognize and avoid the hazards involved.

About the Document

Document Scope

This documentation is a reference for the Harmony XB5R wireless push buttons and ecosystem.

Validity Note

Original instructions and information given in the present document have been written in English (before optional translation).

This documentation is valid for Harmony XB5R wireless push buttons and ecosystem.

The characteristics of the products described in this document are intended to match the characteristics that are available on www.se.com. As part of our corporate strategy for constant improvement, we may revise the content over time to enhance clarity and accuracy. If you see a difference between the characteristics in this document and the characteristics on www.se.com, consider www.se.com to contain the latest information.

Product Related Information

This equipment has been designed to operate outside of any hazardous location. Only install this equipment in zones known to be free of a hazardous atmosphere.

⚠ DANGER

POTENTIAL FOR EXPLOSION

Install and use this equipment in non-hazardous locations only.

Failure to follow these instructions will result in death or serious injury.

The application of this product requires expertise in the design and programming of control systems.

⚠ WARNING

UNINTENDED EQUIPMENT OPERATION

- Only persons with expertise in the design and programming of control systems are allowed to program, install, alter, and apply this product.
- Follow all local and national safety codes and standards.

Failure to follow these instructions can result in death, serious injury, or equipment damage.

⚠ WARNING

LOSS OF CONTROL

- The designer of any control scheme must consider the potential failure modes of control paths and, for critical control functions, provide a means to achieve a safe state during and after a path failure. Examples of critical control functions are emergency stop, overtravel stop, power outage and restart.
- Separate or redundant control paths must be provided for critical control functions.
- System control paths may include communication links. Consideration must be given to the implications of unanticipated transmission delays or failures of the link.
- Observe all accident prevention regulations and local safety guidelines (1).
- Each implementation of the product must be individually and thoroughly tested for proper operation before being placed into service.

Failure to follow these instructions can result in death, serious injury, or equipment damage.

(1) For USA: Additional information, refer to NEMA ICS 1.1 (latest edition), Safety Guidelines for the Application, Installation, and Maintenance of Solid State Control and to NEMA ICS 7.1 (latest edition), Safety Standards for Construction and Guide for Selection, Installation and Operation of Adjustable-Speed Drive Systems.

To consult the EU Declaration of Conformity for the Harmony XB5R products range, please refer to XB5R EU Declaration of Conformity.

General Cybersecurity Information

In recent years, the growing number of networked machines and production plants has seen a corresponding increase in the potential for cyber threats, such as unauthorized access, data breaches, and operational disruptions. You must, therefore, consider all possible cybersecurity measures to help protect assets and systems against such threats.

To help keep your Schneider Electric products secure and protected, it is in your best interest to implement the cybersecurity best practices as described in the Cybersecurity Best Practices document.

Schneider Electric provides additional information and assistance:

- Subscribe to the Schneider Electric security newsletter.
- Visit the Cybersecurity Support Portal web page to:
  - Find Security Notifications.
  - Report vulnerabilities and incidents.
- Visit the Schneider Electric Cybersecurity and Data Protection Posture web page to:
  - Access the cybersecurity posture.
  - Learn more about cybersecurity in the cybersecurity academy.
  - Explore the cybersecurity services from Schneider Electric.

Environmental Data

For product compliance and environmental information, refer to the Schneider Electric Environmental Data Program.

Available Languages of the Document

The document is available in these languages:

- English (EIO0000000812)
- French (EIO0000000813)
- German (EIO0000000814)
- Spanish (EIO0000000815)
- Italian (EIO0000000816)
- Chinese (EIO0000000817)
- Portuguese (EIO0000000818)
- Japanese (EIO0000000895)

Related Documents

Title of Documentation	Reference Number
Cybersecurity Best Practices	Refer to General Cybersecurity Information, page 6
Wireless and Batteryless Pushbutton — Catalogue Module	DIA5ED2121214
XB5RF/XB5RM Package — Instruction Sheet	S1A57199
ZBRR Receivers — Instruction Sheet	S1A57202
Transmitter with Metal or Plastic Head and Cap — Instruction Sheet	S1A57198
ZBRA1 Relay Antenna — Instruction Sheet	S1A57194
ZBRM Mobile Box — Instruction Sheet	S1A57210
ZBRP1 Rope Pull Switch — Instruction Sheet	S1B90581
ZBRV1 Visual Feedback — Instruction Sheet	NNZ1499302
ZBRA3 Passive Antenna — Instruction Sheet	NVE52100
ZBRT• Transmitter — Instruction Sheet	S1A5719802
ZBRZ1 Advanced commissioning module for ZBRT transmitters — Instruction Sheet	NNZ21729
Harmony XB5R — ZBRN1/ZBRN2, User Manual	EIO0000001177

You can download these technical publications and other technical information from our website at www.se.com/ww/en/download/.

Information on Non-Inclusive or Insensitive Terminology

As a responsible, inclusive company, Schneider Electric is constantly updating its communications and products that contain non-inclusive or insensitive terminology. However, despite these efforts, our content may still contain terms that are deemed inappropriate by some customers.

Contact us

Select your country on www.se.com/contact.

Schneider Electric Industries SAS

Head Office

35, rue Joseph Monier

92500 Rueil-Malmaison

France

Cybersecurity

Overview

The objective of Cybersecurity is to help provide increased levels of protection for information and physical assets from theft, corruption, misuse, or accidents while maintaining access for their intended users.

No single Cybersecurity approach is adequate. Schneider Electric recommends a defense-in-depth approach. Conceived by the National Security Agency (NSA), this approach layers the network with security features, appliances, and processes.

The basic components of this approach are:

- Risk assessment,
- A security plan built on the results of the risk assessment,
- A multi-phase training campaign,
- Physical separation of the industrial networks from enterprise networks using a demilitarized zone (DMZ) and the use of firewalls and routing to establish other security zones,
- System access control,
- Device hardening,
- Network monitoring and maintenance.

  This chapter defines the elements that help you configure a system that is less susceptible to cyber-attacks.

  Network administrators, system integrators and personnel that commission, maintain or dispose of a device should:

  - Apply and maintain the device's security capabilities. Refer to **Device Security Capabilities** sub-chapter for details,
  - Address potential risks and mitigation strategies. Refer to **Product Defense-in-Depth** sub-chapter for details,
  - Follow recommendations to optimize cybersecurity.

NOTICE
POTENTIAL COMPROMISE OF SYSTEM AVAILABILITY, INTEGRITY, AND CONFIDENTIALITY Follow the cybersecurity instructions and recommendations. **Failure to follow these instructions can result in equipment damage.**

Product Defense in Depth

Using a layered network approach with multiple security and defense controls in your IT and control system helps minimizing data protection gaps, reduce single-points of failure and create a strong cybersecurity posture. The more layers of security in your network, the harder it is to breach defenses, take digital assets or cause disruption.

Device Security Capabilities

In the Harmony XB5R offer, the ZBRR• and ZBRA1 provide these capabilities:

Threats	Desired security property on components	Device security features
Tampering	Device integrity Data integrity	Firmware integrity and authenticity verification IEEE 802.15.4 Frame Check Sequence
Spoofing	Authentication	IEEE 802.15.4 Sequence Number
Elevation of privilege	Authorization	Physical and Electronic lock of the device (only available for ZBRR•)

Device and Data Integrity Protection

The device integrity improves accuracy and reliability of the device firmware.

Firmware integrity and authenticity verification means the author and the accuracy of the firmware is verified in the device, so that only proven authenticated and valid firmware from Schneider Electric can run on the device.

Authentication

Sequence Number in IEEE 802.15.4 is a protection of ZBRR• relays against replay attacks (spoofing). If a frame is captured and then replayed by an attacker, the frame will be discarded by the ZBRR• relay.

Authorization

Locking the device physically or electronically blocks unauthorized users from manipulating the ZBRR• relays. It safeguards against both deliberate and unintentional misuse of the product.

Measures expected to be provided by the External Environment

External systems interacting with Harmony XB5R devices are expected to follow the cybersecurity practices outlined below to help ensure system security:

Radio Environment Guidelines

For optimal performance and minimized interference, guidelines in General Installation Instruction for Harmony XB5R, page 19 provide best practices for setting up the radio environment in which the Harmony XB5R devices operate.

Access Control in Product Environment

To help protect the device security, it is advised to install the XB5R devices in a secured environment with user access control mechanism so that only the authorized personnel has access to the device.

Schneider Electric Cybersecurity Best Practices

The Schneider Electric cybersecurity best practices detail the essential cybersecurity measures to implement.

Potential Risks and Compensating Controls

Although the devices (ZBRR• and ZBRA1) offers security capabilities, there are still residual risks of cyberattacks. These and the recommended corresponding compensating measures are listed in the table below:

Potential risks	Compensating controls
DoS attacks of IEEE 802.15.4 interface: • Radio protocols are vulnerable to physical security breaches. • Denial of Service attack can jam the radio signal with a powerful radio emitter located in the vicinity. • Denial of Service by flooding: an attacker can intentionally overwhelm the radio network by generating excessive network traffic. Information disclosure: The radio communication is not encrypted, making it vulnerable to interception and sniffing attacks. Spoofing: The radio messages lack authentication, allowing attackers to spoof legitimate devices.	Refer to Schneider Electric cybersecurity best practices and Access Control in Product Environment, page 10

Secure Installation and Security Hardening

This section guides you through the steps for hardening the product during the installation phase.

Physical and Electronic Lock of the Device

Physical and electronic locks safeguard the ZBRR• from unauthorized and malicious use. To implement these mechanisms, refer to Lock/Unlock for ZBRRA and ZBRRC, page 57.

Secure Disposal

The ZBRR• contains the devices ID configured during ZBRT• buttons commissioning.

It is required to perform a factory reset before disposing of the ZBRR• in order to delete the device data. See how to reset ZBRR• in Total Reset Procedure for ZBRRA, and ZBRRC, page 59.

Schneider Electric Cybersecurity Support Portal

Overview

The Schneider Electric cybersecurity support portal outlines the Schneider Electric vulnerability management policy.

The aim of the Schneider Electric vulnerability management policy is to address vulnerabilities in cybersecurity affecting Schneider Electric products and systems, in order to protect installed solutions, customers, and the environment.

Schneider Electric works collaboratively with researchers, Cyber Emergency Response Teams (CERTs), and asset owners to provide accurate information in a timely fashion to adequately protect their installations.

Schneider Electric's Corporate Product CERT (CPCERT) is responsible for managing and issuing alerts on vulnerabilities and mitigations affecting products and solutions.

The CPCERT coordinates communications between relevant CERTs, independent researchers, product managers, and affected customers.

Information Available on the Schneider Electric Cybersecurity Support Portal

The support portal provides the following:

- Information about cybersecurity vulnerabilities of products.
- Information about cybersecurity incidents.
- An interface that enables users to declare cybersecurity incidents or vulnerabilities.

Vulnerability Reporting and Management

Cybersecurity incidents and potential vulnerabilities can be reported via the Schneider Electric website:

- Cybersecurity Incident
- Report a Vulnerability

Harmony XB5R Introduction

General Presentation of Harmony XB5R

Offer Presentation

Harmony wireless and batteryless pushbuttons are used for remote control of a receiver relay using a transmitter pushbutton. Control is via radio transmission: the transmitter is equipped with a “dynamo” generator that converts the mechanical energy produced by pressing the pushbutton into electrical energy. A radio-coded message with a unique ID code is sent, in a single pulse, to one or more receiver (s) located several tens of metres away (see figure A). One receiver can also be activated by different transmitters (see figure B).

Depending on the application, a relay-antenna can be used to get round an obstacle that impedes transmission or to increase the range (see figure A and B).

Figure A: Transmission between 1 Transmitter and 3 Receivers

One transmitter can be taught and can activate several receivers:

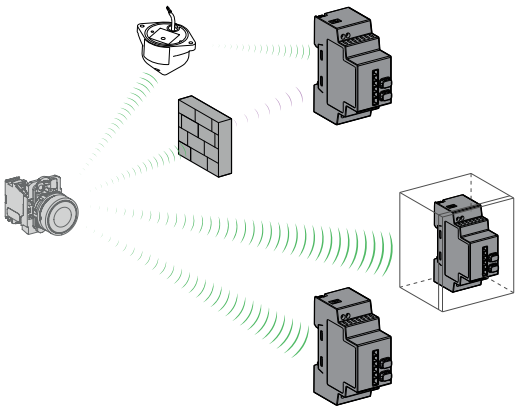

NOTE: The number of receivers is not limited.

Figure B: Transmission between 3 Transmitters and 1 Receiver

One receiver can be activated by several transmitters:

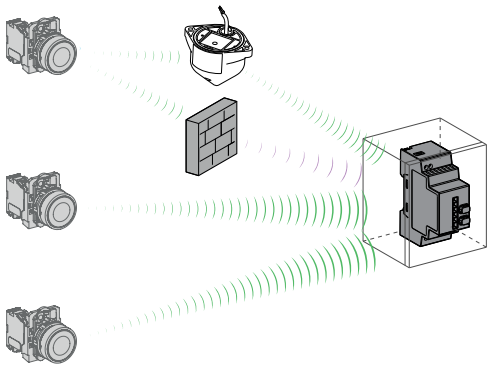

NOTE: The number of transmitters is limited to 32 maximum.

For more details, refer to General Installation Instruction for Harmony XB5R, page 19.

Unintended Use

This technology cannot be used for hoisting applications (“raise/lower”, “left/right”, and so on, movements) or safety related applications (emergency stop buttons, and so on). The Harmony XB4 and XB5 wired pushbutton range or the XAC pendant control station range have to be used for these applications.

⚠ WARNING

LOSS OF CONTROL

Do not use this equipment in safety critical and hoisting machine functions due to the absence of permanent communication and the absence of acknowledgment of the message from the receiver to the transmitters.

Failure to follow these instructions can result in death, serious injury, or equipment damage.

⚠ WARNING

UNINTENDED EQUIPMENT OPERATION

- Use appropriate safety interlocks where personnel and/or equipment hazards exist.
- Do not use damaged products or accessories.
- Do not disassemble, repair, or modify this equipment.
- Install and operate this equipment in an appropriately rated enclosure for its intended environment.
- Install properly rated fuses.
- Check that the control is not actived if the product falls during transit.

Failure to follow these instructions can result in death, serious injury, or equipment damage.

NOTE: The rated fuses are indicated in the Receiver Wiring Diagram, page 37.

Presentation of Harmony XB5R Ready to Use Packages

Illustration

The following figures show for all packages, the transmitter and the receiver are already paired in Schneider factory:

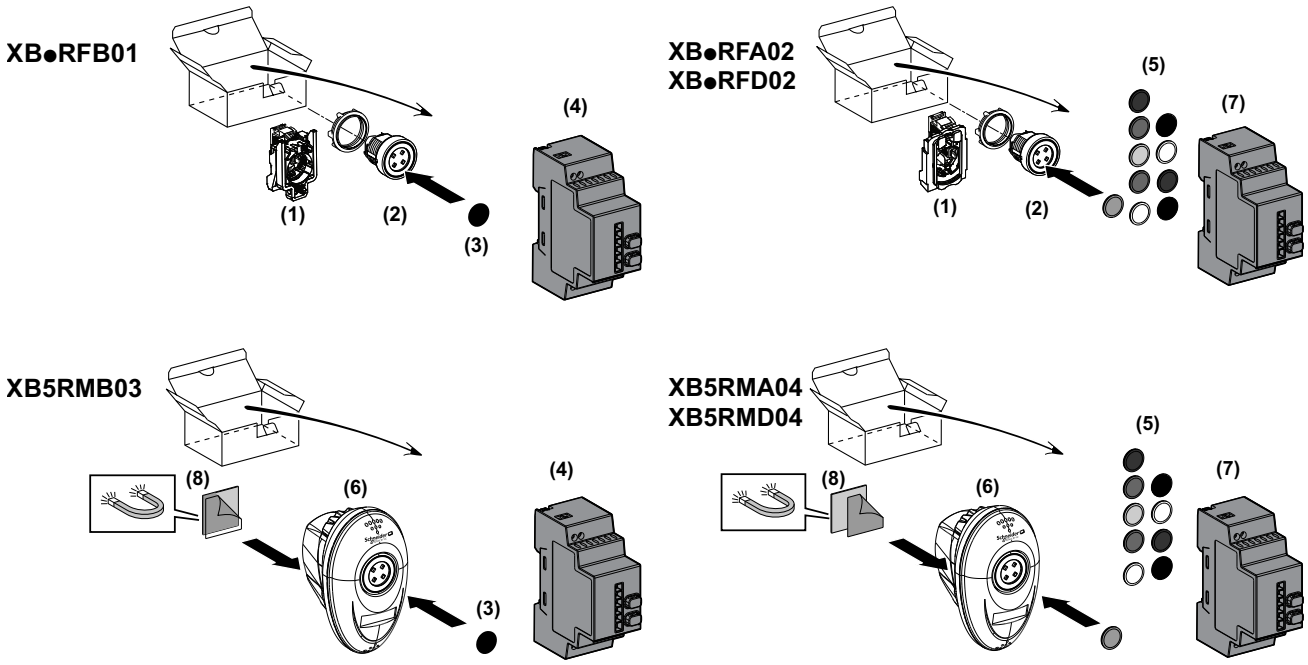

1 ZBRT1 transmitter

2 Head

3 Cap

4 Non-configurable receiver

5 Set of caps

6 Transmitter + Head + Mobile box

7 ZBRRA configurable receiver

8 Magnet (could be glued on the box if needed)

For more details on the contents of these packs, refer to the Wireless and Batteryless Pushbutton Catalog Module.

⚠⚠ DANGER

HAZARD OF ELECTRIC SHOCK, EXPLOSION OR ARC FLASH

- Disconnect all power before servicing equipment.
- Use only the specified voltage when operating this equipment and any associated products.

Failure to follow these instructions will result in death or serious injury.

Presentation of XB5R Components

Transmitters

The following table describes the transmitter characteristics:

Transmitter	Reference	Designation	Pushbutton Type	Cap Color
	ZBRT1	Transmitter: 1 frame sent at the push of the button	–	–
	ZBRT2	Transmitter: 1 frame sent at the push of the button, 1 frame sent at the release of the button	–	–
	ZB5RTA1	Pushbuttons including: • one ZBRT1 transmitter fitted with fixing collar • one spring return pushbutton head with clipped-in cap	Plastic	White
	ZB5RTA2			Black
	ZB5RTA3			Green
	ZB5RTA331			“I” white on green background
	ZB5RTA4			Red
	ZB5RTA432			“O” White on red background
	ZB5RTA5			Yellow
	ZB5RTA6			Blue
	ZB4RTA1		Metallic	White
	ZB4RTA2			Black
	ZB4RTA3			Green
	ZB4RTA331			“I” White on green background
	ZB4RTA4			Red
	ZB4RTA432			“O” White on red background
	ZB4RTA5			Yellow
	ZB4RTA6			Blue
	ZBRP1	Rope Pull Switch	Plastic	Black

Transmitter	Reference	Designation	Pushbutton Type	Cap Color
	ZBRM21A0	Plastic mobile box equipped with button (s) and transmitter(s), 1 set of caps	Plastic, 1 button	1 button with ZBRT1 transmitter
	ZBRM21B0			1 button with ZBRT2 transmitter
	ZBRM22A0		Plastic, 2 buttons	2 buttons with ZBRT1 transmitters
	ZBRM22B0			2 buttons with ZBRT2 transmitters
	ZBRM22AB0			1 button with ZBRT1 and 1 button with ZBRT2
	ZBRM22BA0			1 button with ZBRT2 and 1 button with ZBRT1

Configurable Receivers

The following figure shows the configurable receivers:

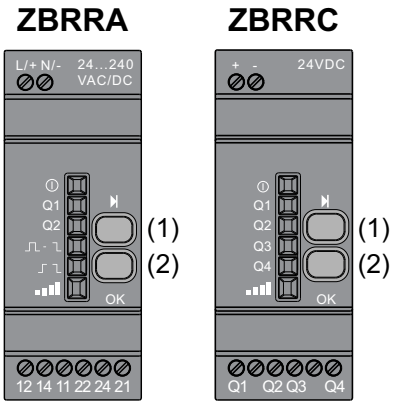

1: Selection button

2: Validation button

The following table describes the characteristics of configurable receivers:

Designation	Outputs	Receiver Voltage	Reference	Outputs Modes			
				Monostable [1]	Bistable [1]	Disable/Enable [1]	Momentary [2]
Configurable receivers with indicator light LED and teach button	4 PNP 200 mA	24 Vdc	ZBRRC	X			X
	2 relays change over 3 A	24...240 Vac/Vdc	ZBRRA	X	X	X	X
[1] Only available with ZBRT1				[2] Only available with ZBRT2			

For a description of the functions of each receiver, refer to Output modes, page 45.

Accessories

The following table describes the characteristics of housing and accessories for XB5R:

Accessories	Reference	Designation	Description
	ZBRM21	Empty plastic mobile box for mobile and fixed applications with wireless and batteryless pushbutton	1 hole
	ZBRM22		2 holes
	ZBRACS	Holder for ZBRM21/ZBRM22 Plastic	–
	XALD01	Empty plastic box for embedded or fixed transmitter	1 hole
	XALD02		2 holes
	ZBRA1	Repeater-Antenna to increased distances	24…240 Vac/Vdc • Cable 5 m (16.4 ft) • 1 Voltage LED • 2 Reception/Emission LED
	ZBRA3	Passive antenna to pass through a wall	• Cable 0.9 m (2.95 ft) • Connector SMA female
–	ZB5AZ009	Mounting Base	Plastic
–	ZB4BZ009		Metallic
	ZBRV1	Visual feedback for ZBRT1 and ZBRT2	With CR2032 battery

Installation

General Installation Instruction for Harmony XB5R

Maximum Distances

Maximum distances between:

- Transmitters: Generic ZBRT1 and ZBRT2, Antenna, ZBRV1, ZBRP1
- Receivers: ZBRRA, ZBRRC

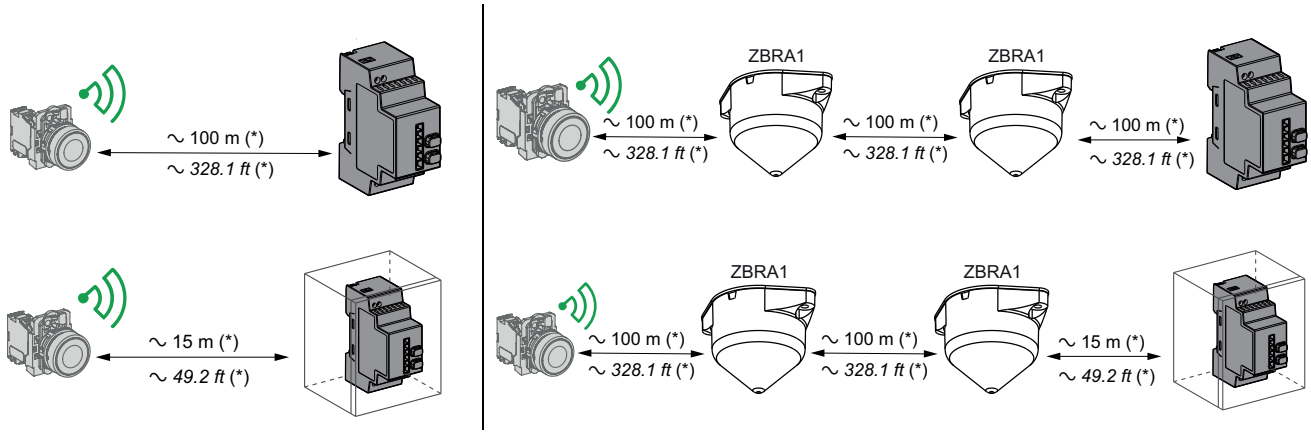

(*) Free field (unobstructed).

NOTE:

- The range may be increased by adding one or several antennas ZBRA1.
- The range is reduced if the transmitter is placed in a metal box.

Typical values are subject to change by the application environment.

⚠ WARNING

LOSS OF COMMUNICATION

Once wiring is complete, perform a comprehensive commissioning test to verify correct operation in all possible active areas.

Failure to follow these instructions can result in death, serious injury, or equipment damage.

The level of signal attenuation depends on the materials through which the signal will pass:

Glass window	10...20 % (*)
Plaster wall	30...45 % (*)
Brick wall	60 % (*)
Concrete wall	70...80 % (*)
Metal structure	50...100 % (*)

(*) Values for indication purposes only. Actual values depend on the thickness and nature of the material.

Installation Conditions

Transmitter operating temperature	-25...+70°C (-13...+158°F)
Receiver operating temperature	-25...+55°C (-13...+131°F)
Transmitter protection level	IP65/NEMA3
Receiver protection level	IP20
Transmitter shock resistance	IK03

Mounting Tips

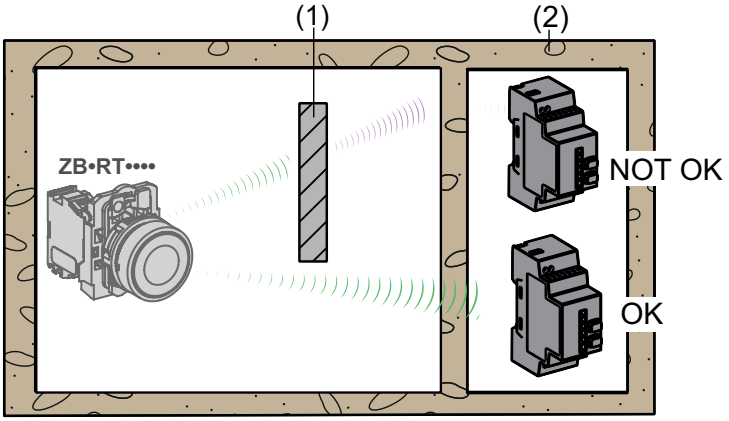

1: Metal structure

2: Wall

NOTE: To ease the radio transmission, the best is to avoid obstacles. Find the best place to install the transmitter and the receiver to have the minimum of obstacles.

Mounting Tips for Antenna

The antenna only needs to be powered. It does not require any configuration or pairing.

To properly mount your antenna, it is required to follow the instructions described in the Relay Antenna Instruction Sheet. For more information, refer to Relay Antenna Installation, page 37.

The antenna and the receiver are installed following their vertical axis:

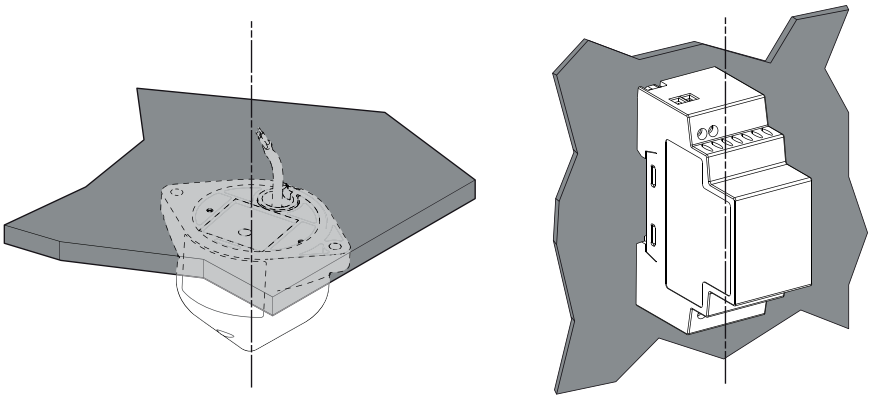

Take account of wireless communication zones:

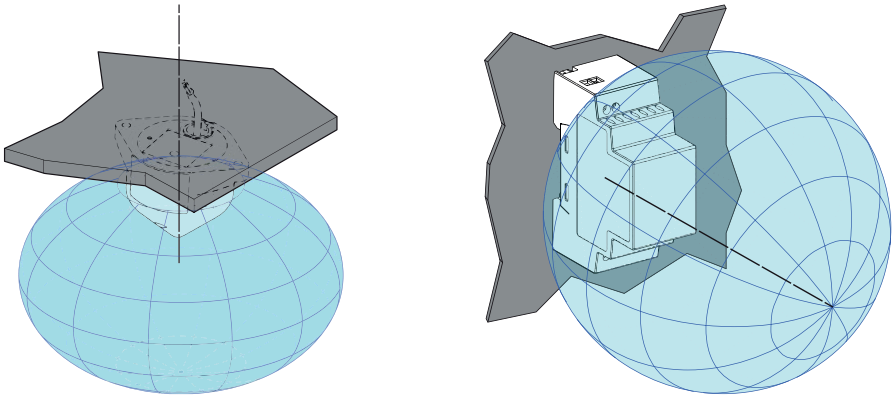

The antenna is used to bypass the obstacle:

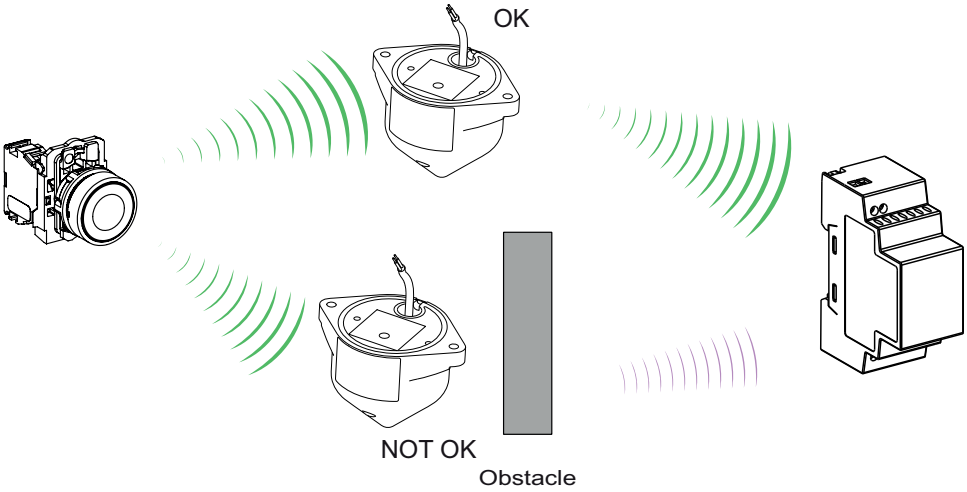

The antenna should be placed before the obstacle. The signal will be amplified before the obstacle to enable to go through it:

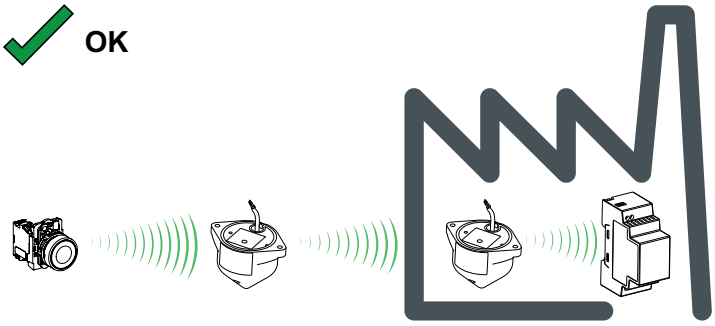

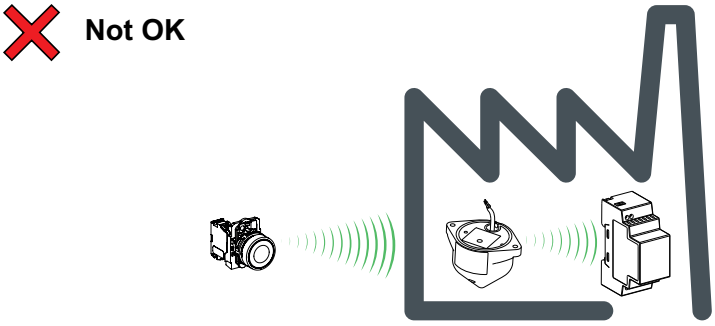

Impact of the radio performances in the environment:

- For any environment, the radio performances are subjected to be instable due to perturbations made by any kind of industrial machines, processes, or electronic devices.
- As a result at any time, it is possible that radio frames sent by a transmitter will not be caught by the receiver during the perturbation.
- With XB5R offer, only one radio frame is sent to the receiver and there is no permanent radio communication. This reason makes to avoid the use of XB5R offer for applications where permanent reliability and/or permanent precisions are needed.

ZBRA3 Passive Antenna

Overview

When there is a metallic wall between the transmitters and receivers, a passive antenna can be used. It helps radio signal to go through the metallic surface:

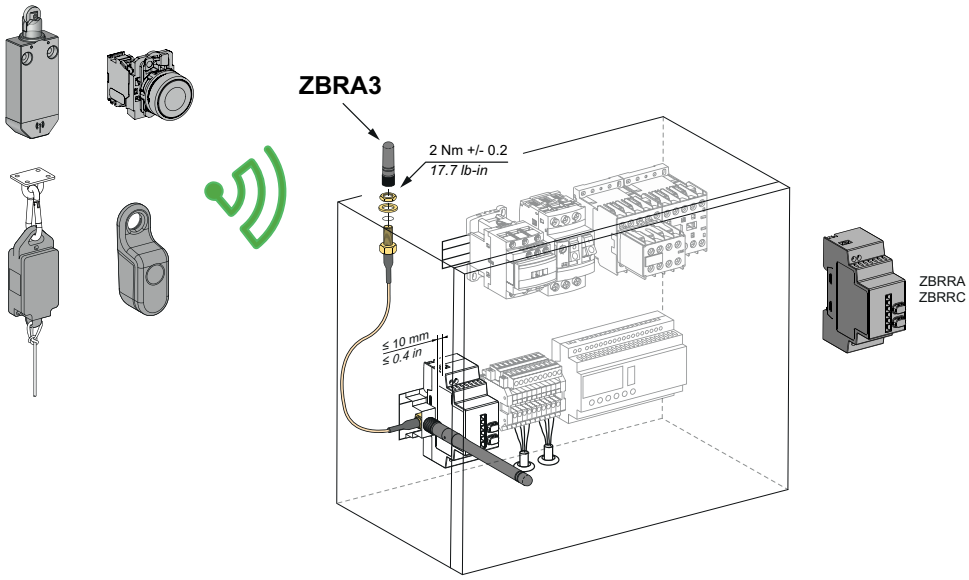

Mounting Tips for the ZBRA3 Passive Antenna

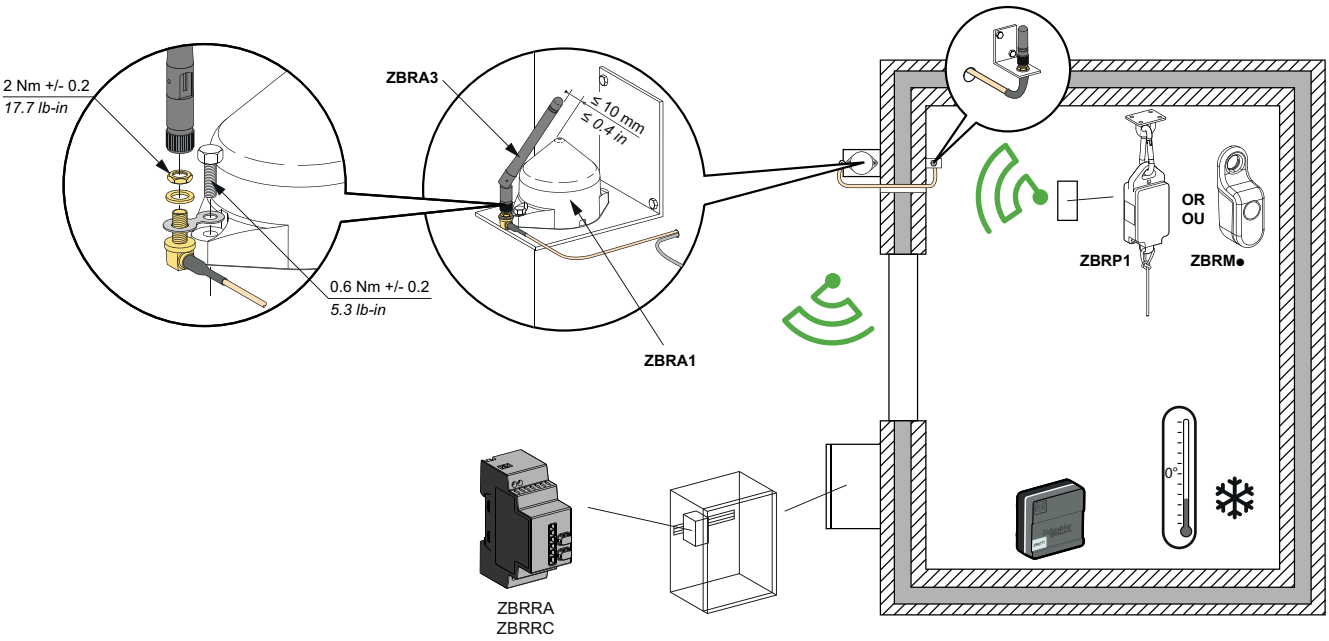

Transmitter and Pushbutton Assembly

Introduction

Follow these steps to install the transmitter and pushbutton.

Mounting on a panel

This figure shows the diameter of the holes for ZB5R or ZB4R pushbuttons.

For all ZB5R••• heads except ZB5RZC2:

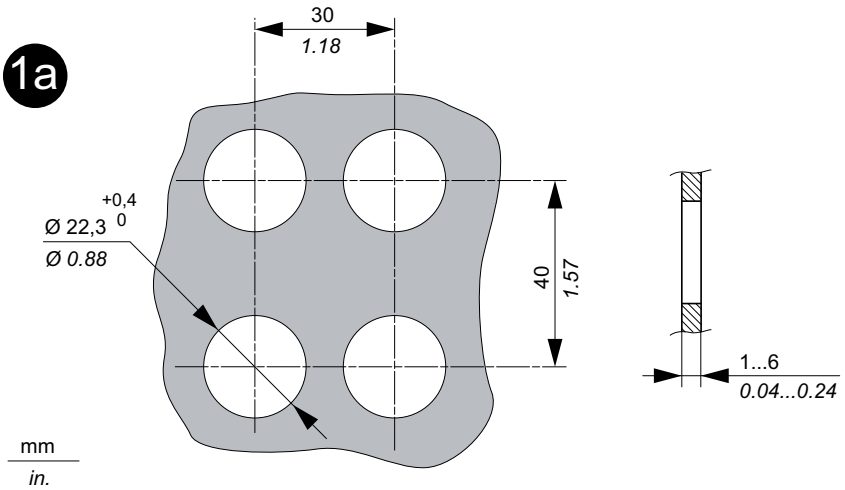

For ZB5RZC2 head:

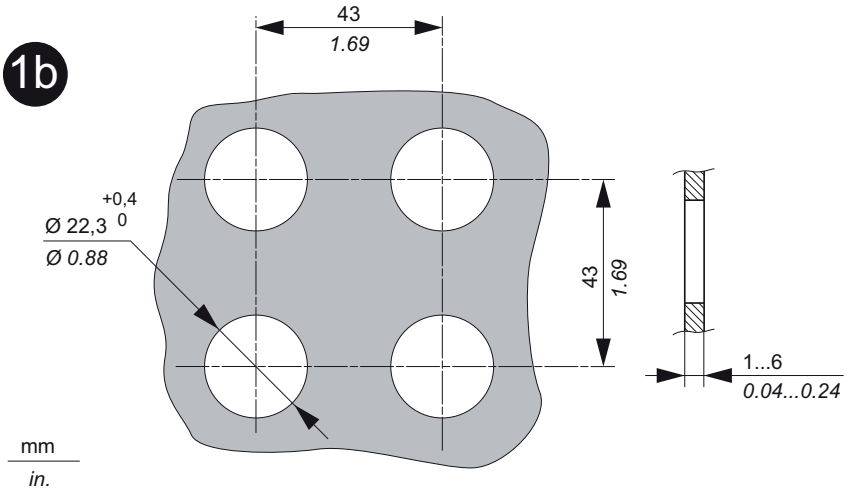

Packages: ID Registration

Note and retain your transmitter ID. You will need it for an ID reset. The ID reset is described in the Total Reset and ID Reset Procedure, page 59

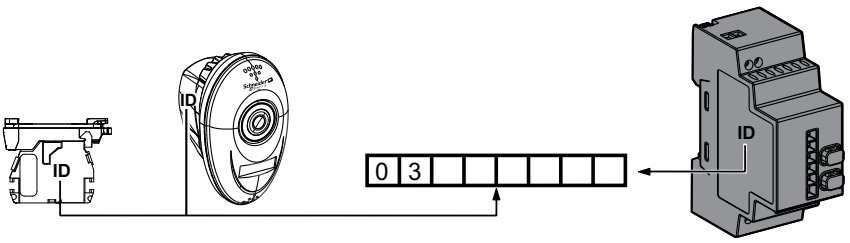

Transmitter: ID Registration

Note and retain your transmitter ID. You will need it for an ID reset. The ID reset is described in the Total Reset and ID Reset Procedure, page 59

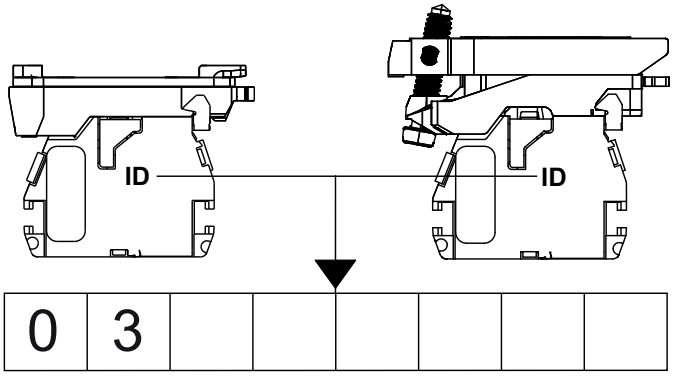

Rope Pull Switch: ID Registration

Note and retain your transmitter ID. You will need it for an ID reset. The ID reset is described in the Total Reset and ID Reset Procedure, page 59

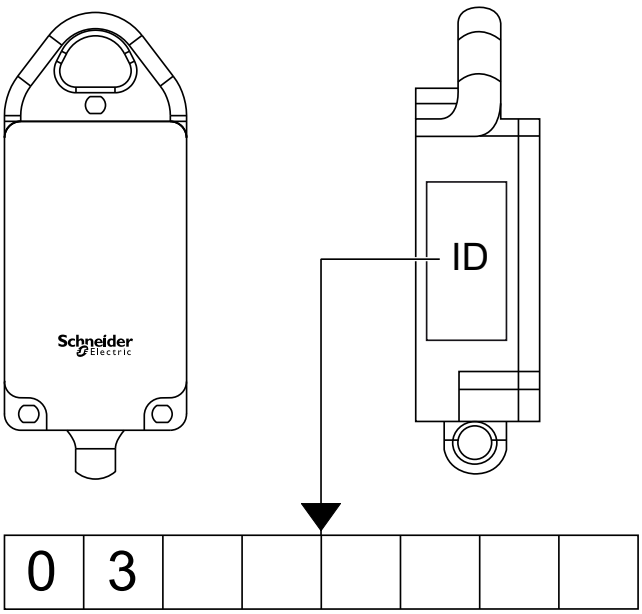

Assembling and Disassembling Plastic Pushbuttons

Follow the steps shown to assemble or disassemble the transmitter and the plastic pushbutton:

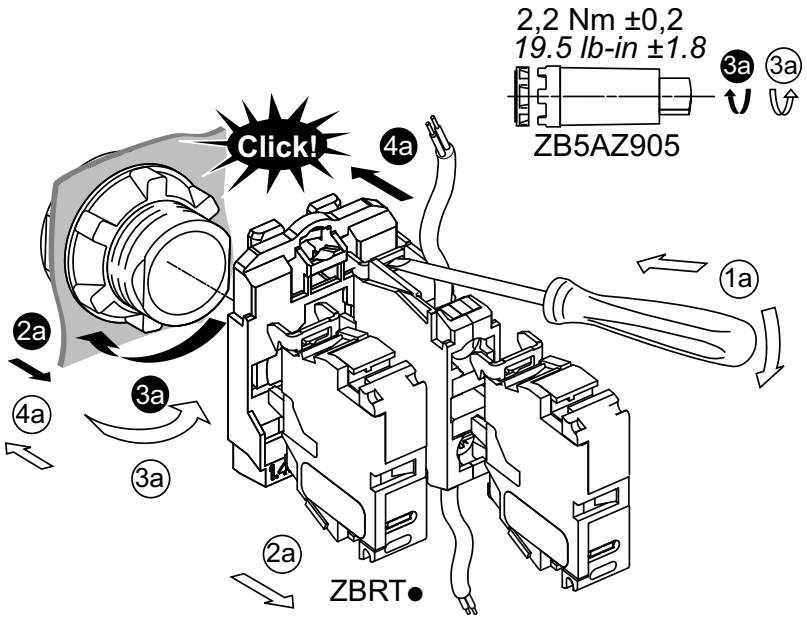

Mounting | Unmounting

Assembling and Disassembling Metallic Pushbuttons

Follow the steps shown to assemble or disassemble the transmitter and the metallic pushbutton:

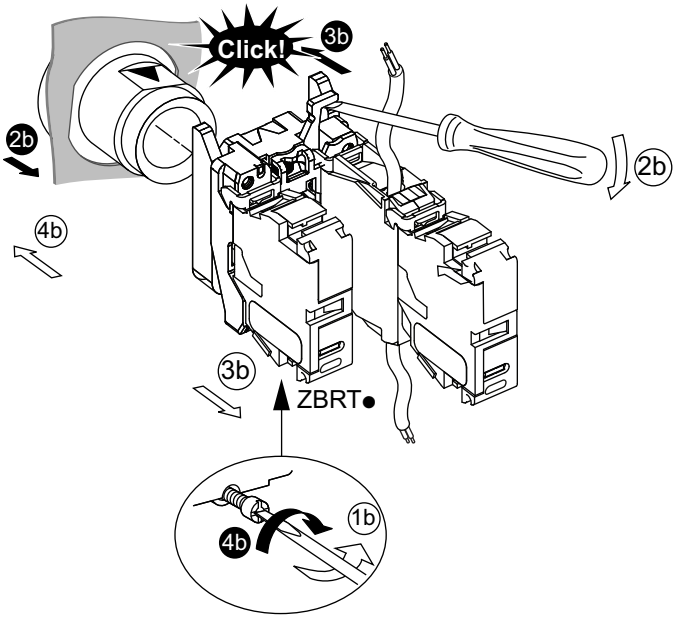

Mounting | Unmounting

Model: ZBRT1 enclosed in ZBRP1

Federal Communication Commission Interference Statement

This device complies with Part 15 of the FCC Rules. Operation is subject to the following two conditions:

1. This device may not cause harmful interference,
2. This device must accept any interference received, including interference that may cause undesired operation.

This equipment has been tested and found to comply with the limits for a Class B digital device, pursuant to Part 15 of the FCC Rules. These limits are designed to provide reasonable protection against harmful interference in a residential installation.

This equipment generates, uses and can radiate radio frequency energy and, if not installed and used in accordance with the instructions, may cause harmful interference to radio communications. However, there is no guarantee that interference will not occur in a particular installation.

If this equipment does cause harmful interference to radio or television reception, which can be determined by turning the equipment off and on, the user is encouraged to try to correct the interference by one of the following measures:

- Reorient or relocate the receiving antenna.
- Increase the separation between the equipment and receiver.
- Connect the equipment into an outlet on a circuit different from that to which the receiver is connected.
- Consult the dealer or an experienced radio/TV technician for help.

FCC Caution: Any changes or modifications not expressly approved by the party responsible for compliance could void the user's authority to operate this equipment.

This transmitter must not be co-located or operating in conjunction with any other antenna or transmitter.

Radiation Exposure Statement

This equipment complies with FCC radiation exposure limits set forth for an uncontrolled environment.

This equipment should be installed and operated with minimum distance 20 cm between the radiator and your body.

Industry Canada Statement

This device complies with RSS-247 of the Industry Canada Rules. Operation is subject to the following two conditions:

1. This device may not cause harmful interference,
2. This device must accept any interference received, including interference that may cause undesired operation.

Ce dispositif est conforme à la norme CNR-247 d'Industrie Canada applicable aux appareils radio exempts de licence. Son fonctionnement est sujet aux deux conditions suivantes:

1. Le dispositif ne doit pas produire de brouillage préjudiciable,
2. Ce dispositif doit accepter tout brouillage reçu, y compris un brouillage susceptible de provoquer un fonctionnement indésirable.

Radiation Exposure Statement

This equipment complies with IC radiation exposure limits set forth for an uncontrolled environment.

This equipment should be installed and operated with minimum distance 20 cm between the radiator and your body.

Déclaration d'exposition aux radiations

Cet équipement est conforme aux limites d'exposition aux rayonnements IC établies pour un environnement non contrôlé.

Cet équipement doit être installé et utilisé avec un minimum de 20 cm de distance entre la source de rayonnement et votre corps.

Mounting Data for Rope Pull Switch

Rope Pull Switch Assembly

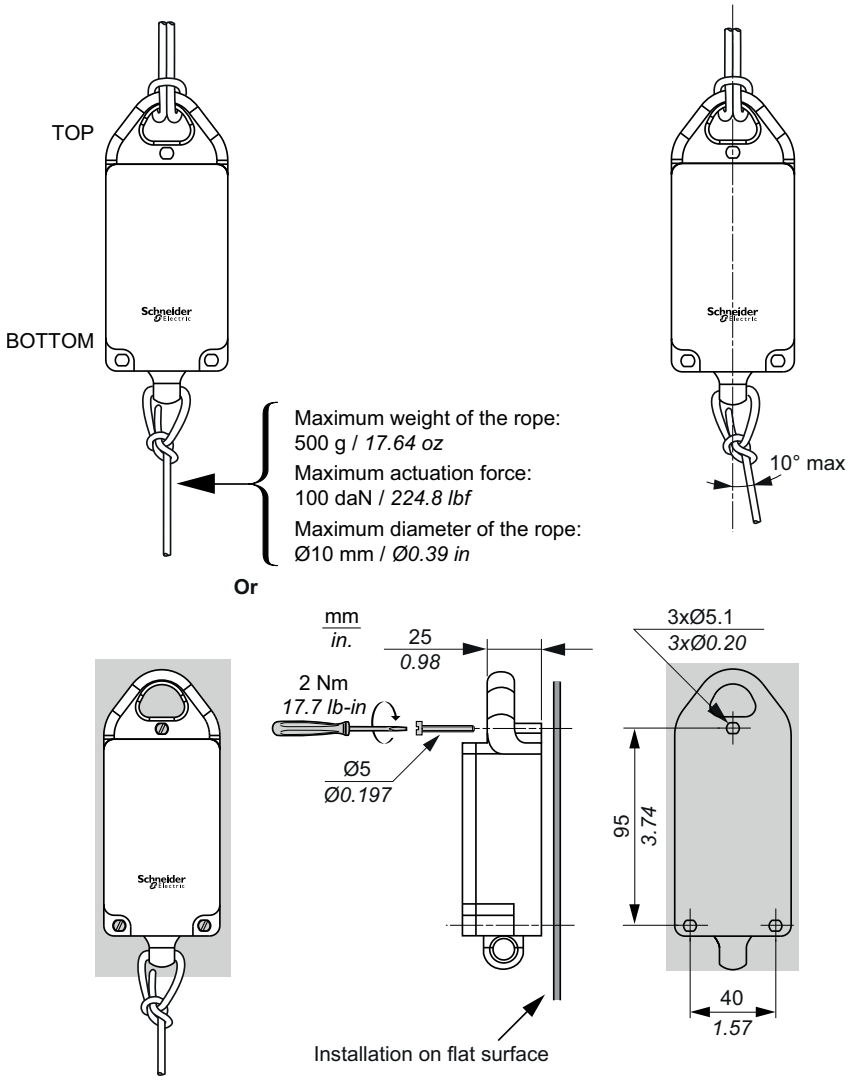

⚠ WARNING

RADIO TRANSMISSION ATTENUATION

Do not install the ZBRP1 on a metal plate in order to reduce the risk of interference.

Failure to follow these instructions can result in death, serious injury, or equipment damage.

Mounting Instructions for ZBRM01 Handy Box

Assembly and Disassembly

Follow the steps shown to assemble or disassemble the handy box:

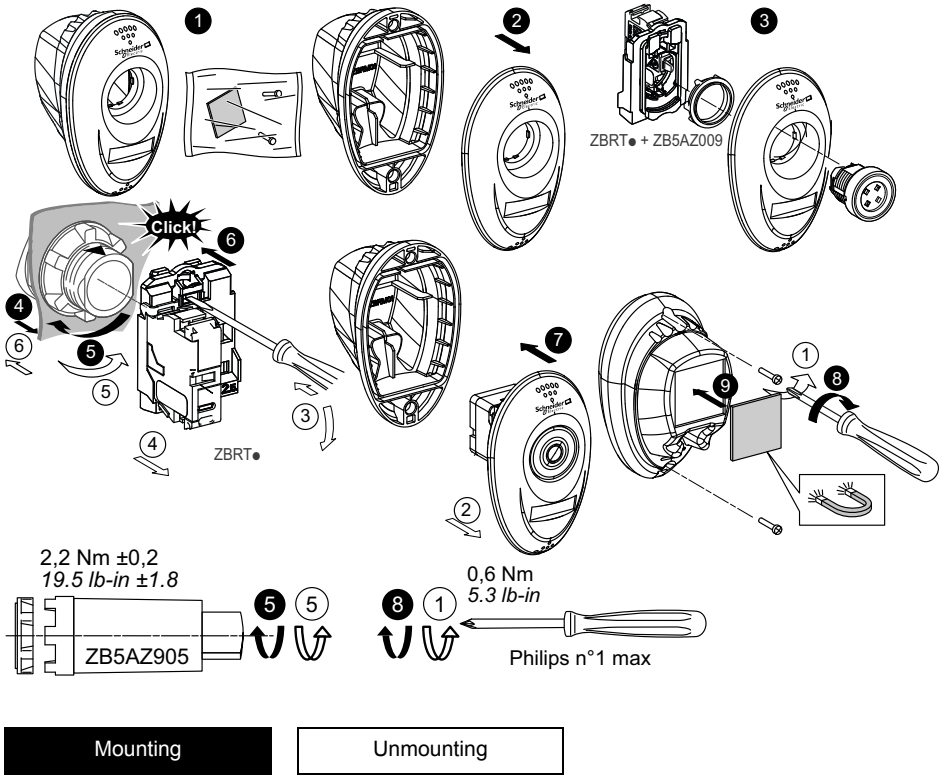

Location for Accessories

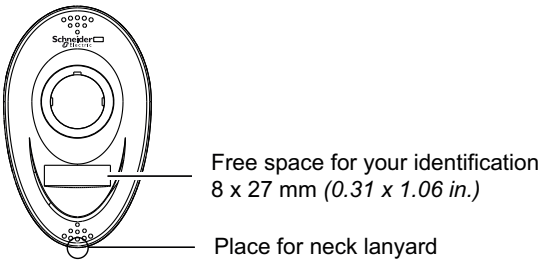

Mounting Instructions for ZBRM21/ZBRM22 Mobile Boxes

Assembly and Disassembly

Follow the steps shown to assemble or disassemble the mobile box:

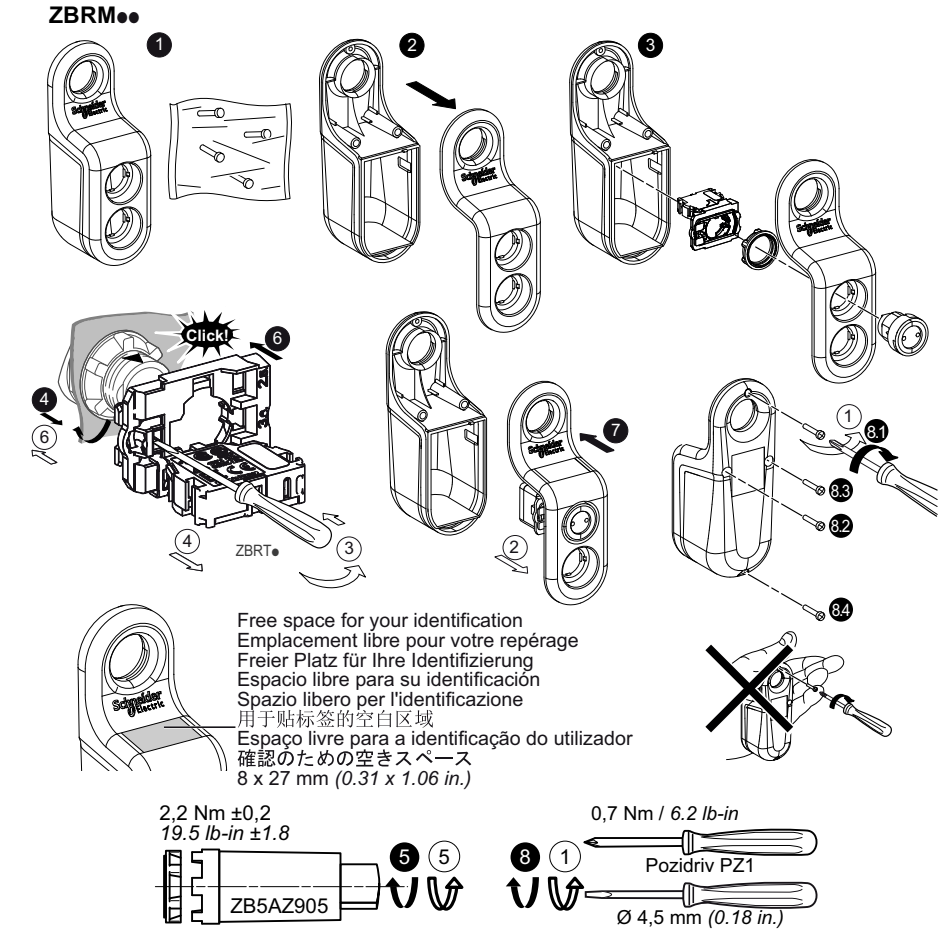

Location for Accessories

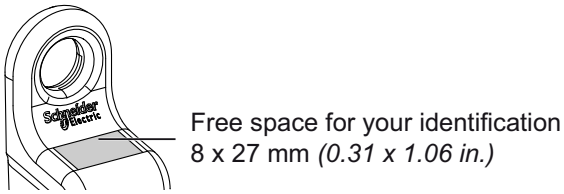

Mounting instructions For ZBRACS Holder

Assembly

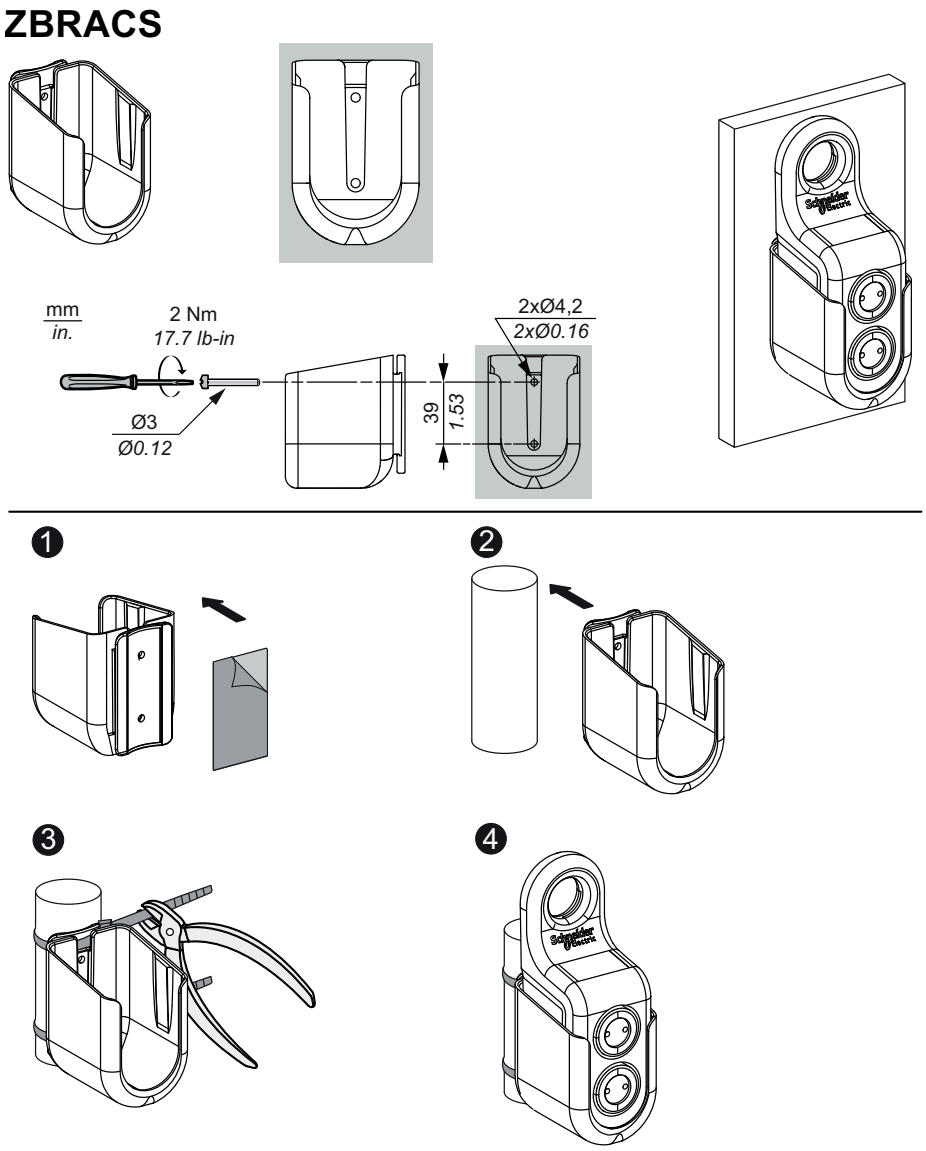

Receiver Assembly and Disassembly

Instructions

Follow the steps shown to assemble or disassemble the receiver:

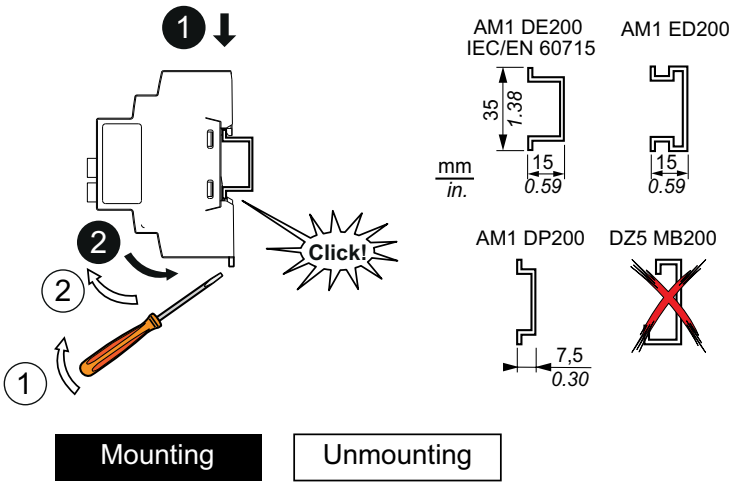

Models: ZBRRA, and ZBRRC

Federal Communication Commission Interference Statement

This device complies with Part 15 of the FCC Rules. Operation is subject to the following two conditions:

1. This device may not cause harmful interference,
2. This device must accept any interference received, including interference that may cause undesired operation.

This equipment has been tested and found to comply with the limits for a Class B digital device, pursuant to Part 15 of the FCC Rules. These limits are designed to provide reasonable protection against harmful interference in a residential installation.

This equipment generates, uses and can radiate radio frequency energy and, if not installed and used in accordance with the instructions, may cause harmful interference to radio communications. However, there is no guarantee that interference will not occur in a particular installation.

If this equipment does cause harmful interference to radio or television reception, which can be determined by turning the equipment off and on, the user is encouraged to try to correct the interference by one of the following measures:

- Reorient or relocate the receiving antenna.
- Increase the separation between the equipment and receiver.
- Connect the equipment into an outlet on a circuit different from that to which the receiver is connected.
- Consult the dealer or an experienced radio/TV technician for help.

FCC Caution: Any changes or modifications not expressly approved by the party responsible for compliance could void the user's authority to operate this equipment.

This transmitter must not be co-located or operating in conjunction with any other antenna or transmitter.

Radiation Exposure Statement

This equipment complies with FCC radiation exposure limits set forth for an uncontrolled environment.

This equipment should be installed and operated with minimum distance 20 cm between the radiator and your body.

Industry Canada Statement

This device complies with RSS-247 of the Industry Canada Rules. Operation is subject to the following two conditions:

1. This device may not cause harmful interference,
2. This device must accept any interference received, including interference that may cause undesired operation.

Ce dispositif est conforme à la norme CNR-247 d'Industrie Canada applicable aux appareils radio exempts de licence. Son fonctionnement est sujet aux deux conditions suivantes:

1. Le dispositif ne doit pas produire de brouillage préjudiciable,
2. Ce dispositif doit accepter tout brouillage reçu, y compris un brouillage susceptible de provoquer un fonctionnement indésirable.

Radiation Exposure Statement

This equipment complies with IC radiation exposure limits set forth for an uncontrolled environment.

This equipment should be installed and operated with minimum distance 20 cm between the radiator and your body.

Déclaration d'exposition aux radiations

Cet équipement est conforme aux limites d'exposition aux rayonnements IC établies pour un environnement non contrôlé.

Cet équipement doit être installé et utilisé avec un minimum de 20 cm de distance entre la source de rayonnement et votre corps.

Receiver Dimensions

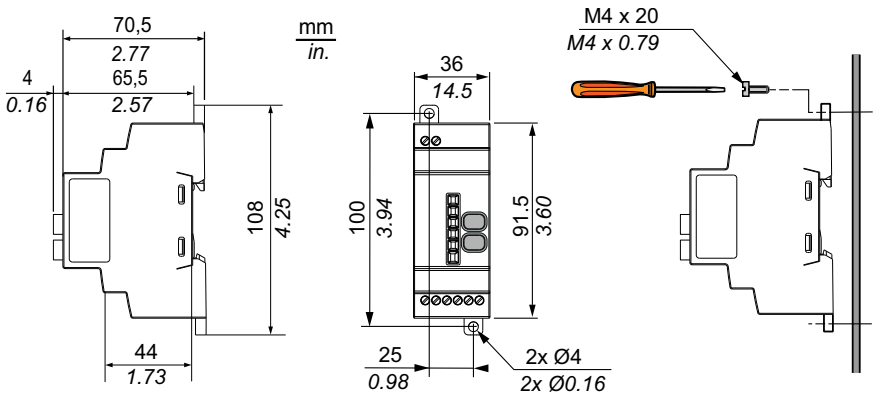

mm / in. (6 / 0.24)				
mm^2	0,14…0,75	0,14…2,5	0,14…4	0,14…1,5
AWG	*26…18*	*26…14*	*26…12*	*26…16*

Ø 3,5 mm / *0.14 in.*		Nm	0,6
		lb-in	*5.3*

Receiver Mounting Positions

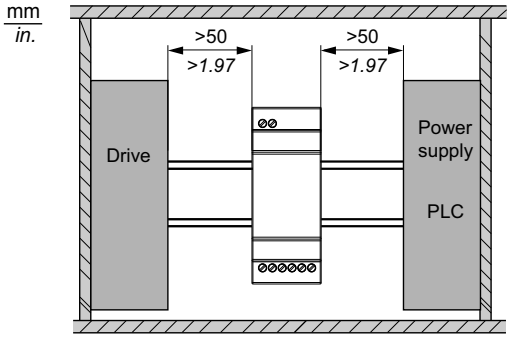

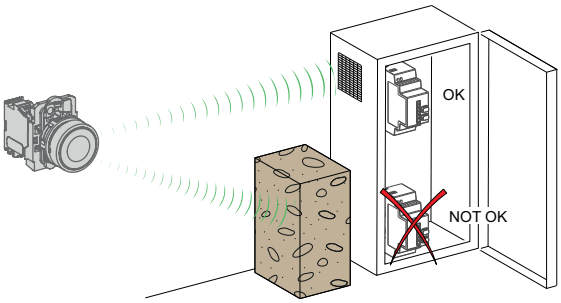

1: To enhance the signal reception, respect the above positioning.

2: In a metal cabinet, the optimum place for the receiver is on the top and/or near the holes. This position avoids obstacles and enhances reception.

NOTE: For ZBRRA, and ZBRRC: before disassembly for storage, perform a total reset of the receiver memory. The total reset is described in the Total Reset and ID Reset procedure, page 59.

Receiver Wiring Diagram

Wiring Diagram

The following figures show the wiring diagrams for the Harmony XB5R receiver:

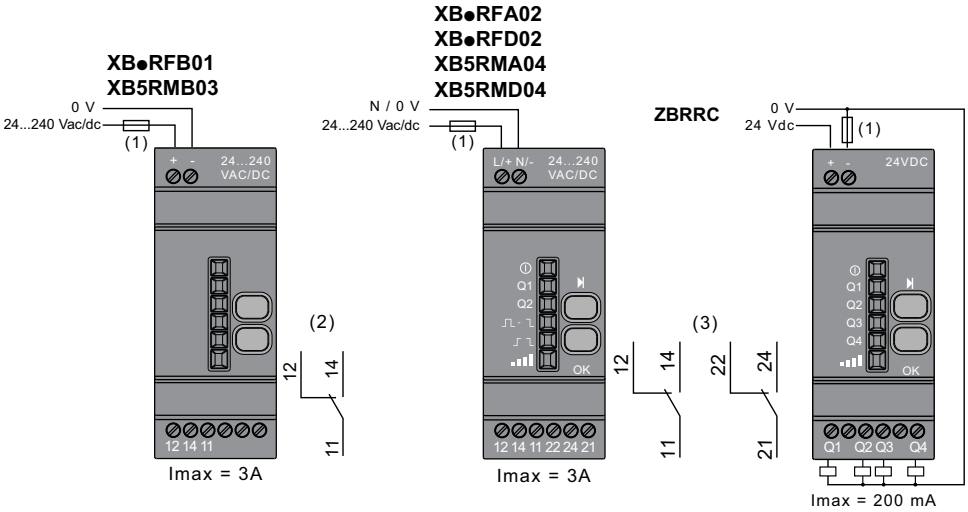

(1): 500 mA fuse from supplier Bussmann® reference GMA-500mA, 250 V 0.5 A fast-blow (or equivalent).

(2): Output contact ratings B300 Pilot Duty 3 A - 240 Vac Resistive.

(3): Output contact ratings B300 - R300 Pilot Duty 3 A - 240 Vac Resistive.

UL: Control of Overvoltage to be provided after main service disconnect overcurrent device, with a UL1449 TVSS device (Transient Voltage Surge Suppressor) tested as type 2 (6 kV / 3 kA min.), with a MCOV (Maximum Continuous Operating Voltage) min. rated to Phase to Phase voltage and a VPR (Voltage Protection Rating) of 1.5 kV.

⚠⚠DANGER

HAZARD OF ELECTRIC SHOCK, EXPLOSION OR ARC FLASH

- Disconnect all power before servicing equipment.
- Use only the specified voltage when operating this equipment and any associated products.

Failure to follow these instructions will result in death or serious injury.

Relay Antenna Installation

Introduction

Observe the maximum distances between transmitter, antenna and receiver, page 19 and the Mounting tips for antenna, page 20.

Temporary Mounting

This temporary mounting is used to search the best place for the antenna in order to enhance the radio signal:

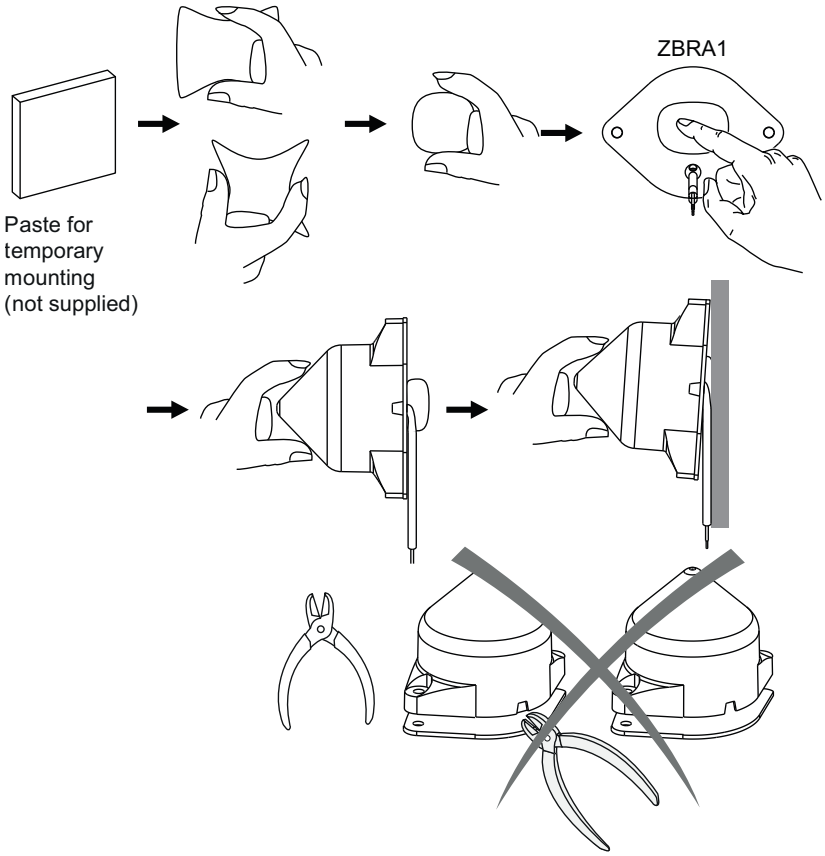

NOTE: For temporary assembly the breakable part of the antenna must not be cut off.

Axial Cable Route

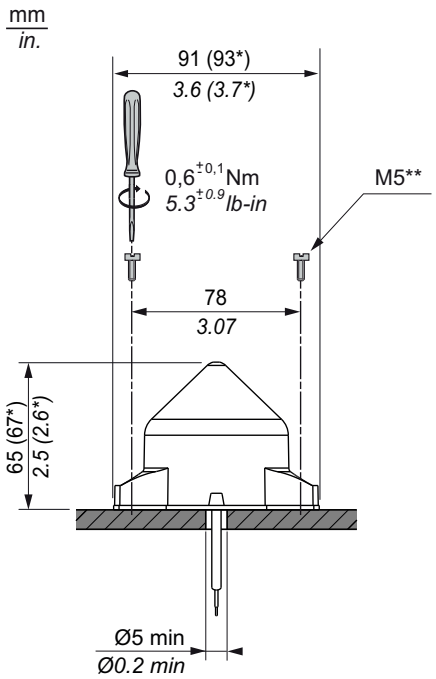

(*): Dimensions including gasket

(**): Screws not supplied

Radial Cable Route

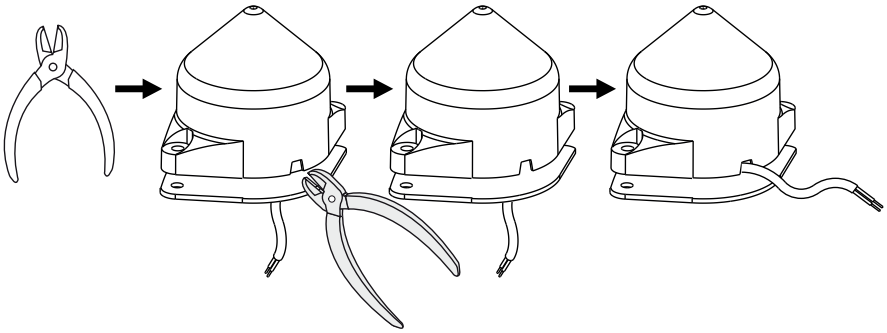

Wiring Diagram

The following figure shows the relay antenna wiring diagram for Harmony XB5R:

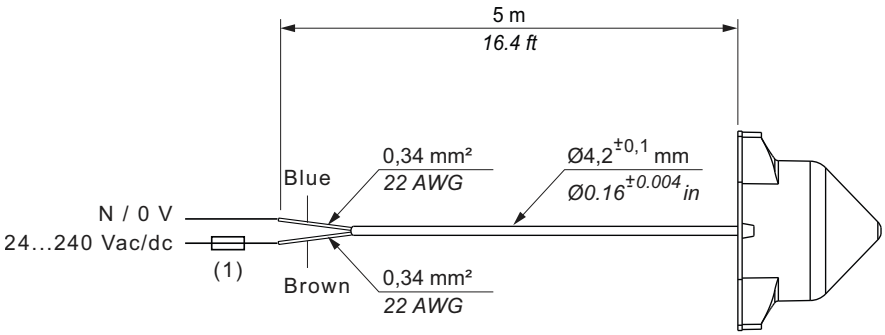

1: 200 mA from supplier Bussman® reference GMA-200mA, 250 V 0.2 A fast-blow (or equivalent), 100 mA from supplier Bussman® reference GMA-100mA, 24 V 0.1 A fast-blow (or equivalent).

UL: Control of Overvoltage to be provided after main service disconnect overcurrent device, with a UL1449 TVSS device (Transient Voltage Surge Suppressor) Tested as type 2 (6 kV/3 kA min), with a MCOV (Maximum Continuous Operating Voltage) min. rated to Phase to Phase voltage and a VPR (Voltage Protection Rating) of 1.5 kV.

⚠ WARNING

UNINTENDED EQUIPMENT OPERATION AND/OR LOSS OF CONTROL

- Do not use this equipment in safety critical and hoisting machine functions due to the lack of permanent communication and the lack of acknowledgment of the message from the receiver to the transmitters.
- Use appropriate safety interlocks where personnel and/or equipment hazards exist.
- Take into account in your risk analysis that there is no acknowledge of the message from the receiver to the transmitters.
- Install and operate this equipment in an enclosure appropriately rated for its intended environment.

Failure to follow these instructions can result in death, serious injury, or equipment damage.

ZBRR• and ZBRA•

Federal Communication Commission Interference Statement

This device complies with Part 15 of the FCC Rules. Operation is subject to the following two conditions:

1. This device may not cause harmful interference,
2. This device must accept any interference received, including interference that may cause undesired operation.

This equipment has been tested and found to comply with the limits for a Class B digital device, pursuant to Part 15 of the FCC Rules. These limits are designed to provide reasonable protection against harmful interference in a residential installation.

This equipment generates, uses and can radiate radio frequency energy and, if not installed and used in accordance with the instructions, may cause harmful interference to radio communications. However, there is no guarantee that interference will not occur in a particular installation.

If this equipment does cause harmful interference to radio or television reception, which can be determined by turning the equipment off and on, the user is encouraged to try to correct the interference by one of the following measures:

- Reorient or relocate the receiving antenna.
- Increase the separation between the equipment and receiver.
- Connect the equipment into an outlet on a circuit different from that to which the receiver is connected.
- Consult the dealer or an experienced radio/TV technician for help.

FCC Caution: Any changes or modifications not expressly approved by the party responsible for compliance could void the user's authority to operate this equipment.

This transmitter must not be co-located or operating in conjunction with any other antenna or transmitter.

Radiation Exposure Statement

This equipment complies with FCC radiation exposure limits set forth for an uncontrolled environment.

This equipment should be installed and operated with minimum distance 20 cm between the radiator and your body.

Industry Canada Statement

This device complies with RSS-247 of the Industry Canada Rules. Operation is subject to the following two conditions:

1. This device may not cause harmful interference,
2. This device must accept any interference received, including interference that may cause undesired operation.

Ce dispositif est conforme à la norme CNR-247 d'Industrie Canada applicable aux appareils radio exempts de licence. Son fonctionnement est sujet aux deux conditions suivantes:

1. Le dispositif ne doit pas produire de brouillage préjudiciable,
2. Ce dispositif doit accepter tout brouillage reçu, y compris un brouillage susceptible de provoquer un fonctionnement indésirable.

Radiation Exposure Statement

This equipment complies with IC radiation exposure limits set forth for an uncontrolled environment.

This equipment should be installed and operated with minimum distance 20 cm between the radiator and your body.

Déclaration d'exposition aux radiations

Cet équipement est conforme aux limites d'exposition aux rayonnements IC établies pour un environnement non contrôlé.

Cet équipement doit être installé et utilisé avec un minimum de 20 cm de distance entre la source de rayonnement et votre corps.

Preparing For Use

Compatibility Rules

Transmitter Compatibility

ZBRT1/ZBRT2 transmitter is compatible with the following only:

- ZBRR• receivers with firmware version 2.0 and higher.
- ZBRA1 relay antenna with firmware version 2.0 and higher.
- ZBRN• Harmony Hub with firmware version higher than 1.2.

ZBRT1/ZBRT2 transmitter + ZBRV1 visual feedback is compatible with the following only:

- ZBRR• receivers with firmware version 2.2 and higher.
- ZBRA1 relay antenna with firmware version 3.3 and higher.
- ZBRN1/ZBRN2 with firmware version 3.32 and higher.

Transmitter Types

ZBRT1 Transmitter

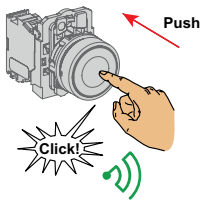

The radio message is sent when the button is pressed, signalled by a click. If the button is held down, the message is not transmitted continuously. The message is not sent when the button is released.

If two messages are received less than 10 ms apart, the receiver do not process them.

To avoid any conflict of multiple transmission from different transmitters, a minimum of 10 ms is required between each radio transmission:

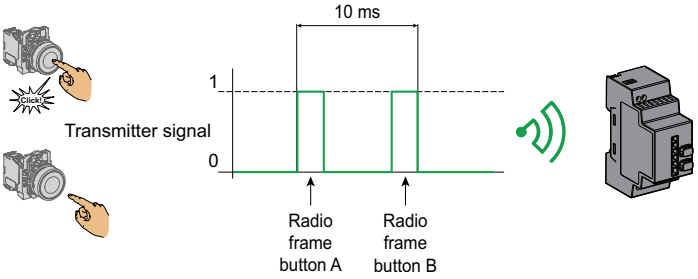

⚠WARNING

UNEXPECTED RECEIVER BEHAVIOR

Do not send a radio message within 10 ms after the button is clicked.

Failure to follow these instructions can result in death, serious injury, or equipment damage.

ZBRT1 is used for applications where single pulse is required (for example, remote start of machine and reset after machine fault).

ZBRT2 Transmitter

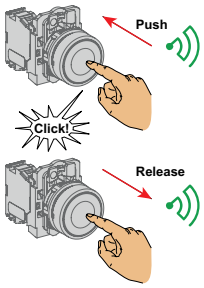

The radio message is sent when the button is pressed, signaled by a click. If the button is held down, the message is not transmitted continuously.

A second radio message is sent when the button is released. This message is not transmitted continuously. It is transmitted once, at the release of the push-button.

The ZBRT2 transmitter is used only for the Momentary output mode, page 48.

LED Status

ZBRRA

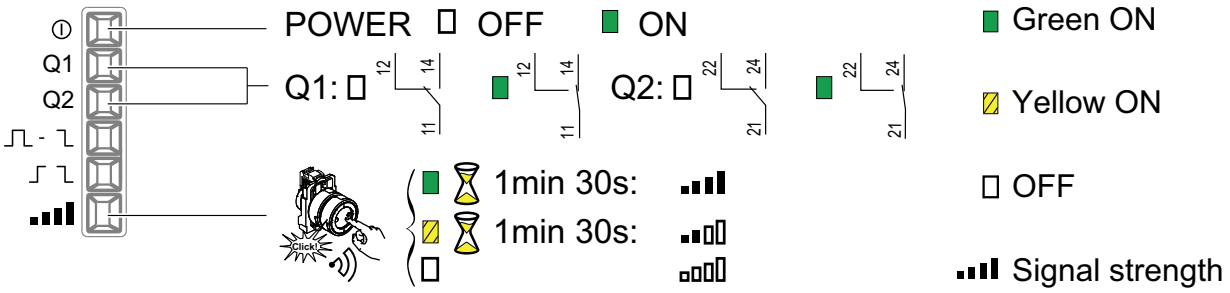

ZBRRC

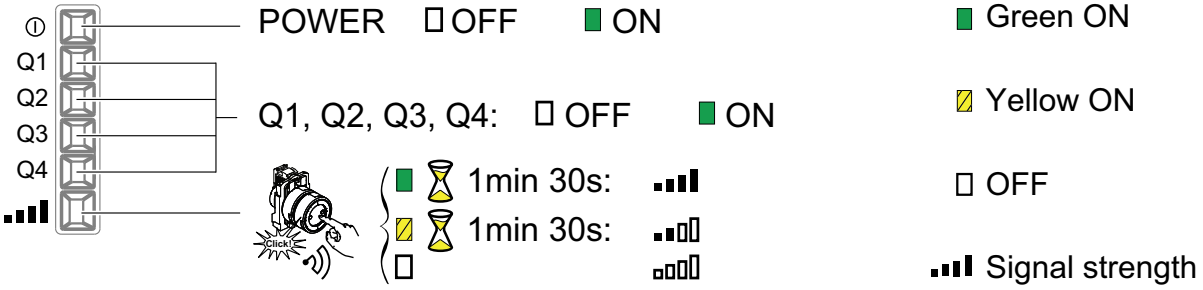

XB•R•B

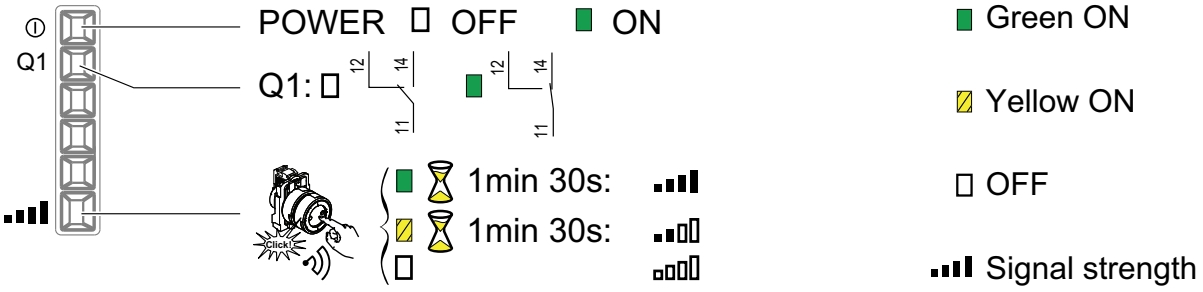

Synthesis

During the output configuration process:

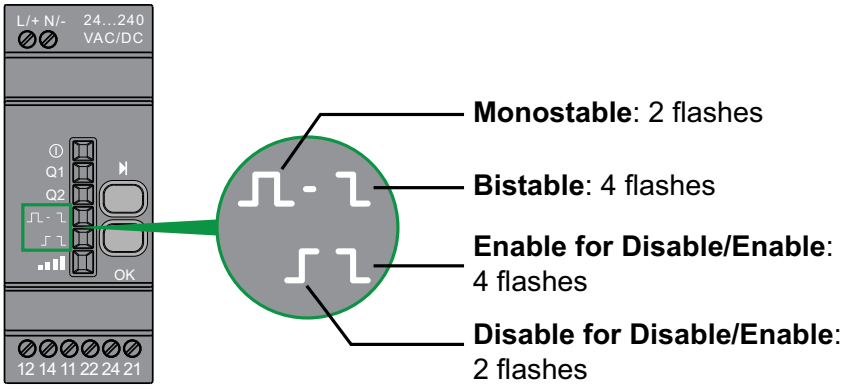

Output modes

Overview

Reference	Output Modes			
	Monostable	Bistable	Disable/ Enable	Momentary (only with ZBTR2)
ZBRRC	X			X
ZBRRA	X	X	X	X

Monostable Output

Factory setting for packages and for ZBRRA, and ZBRRC:

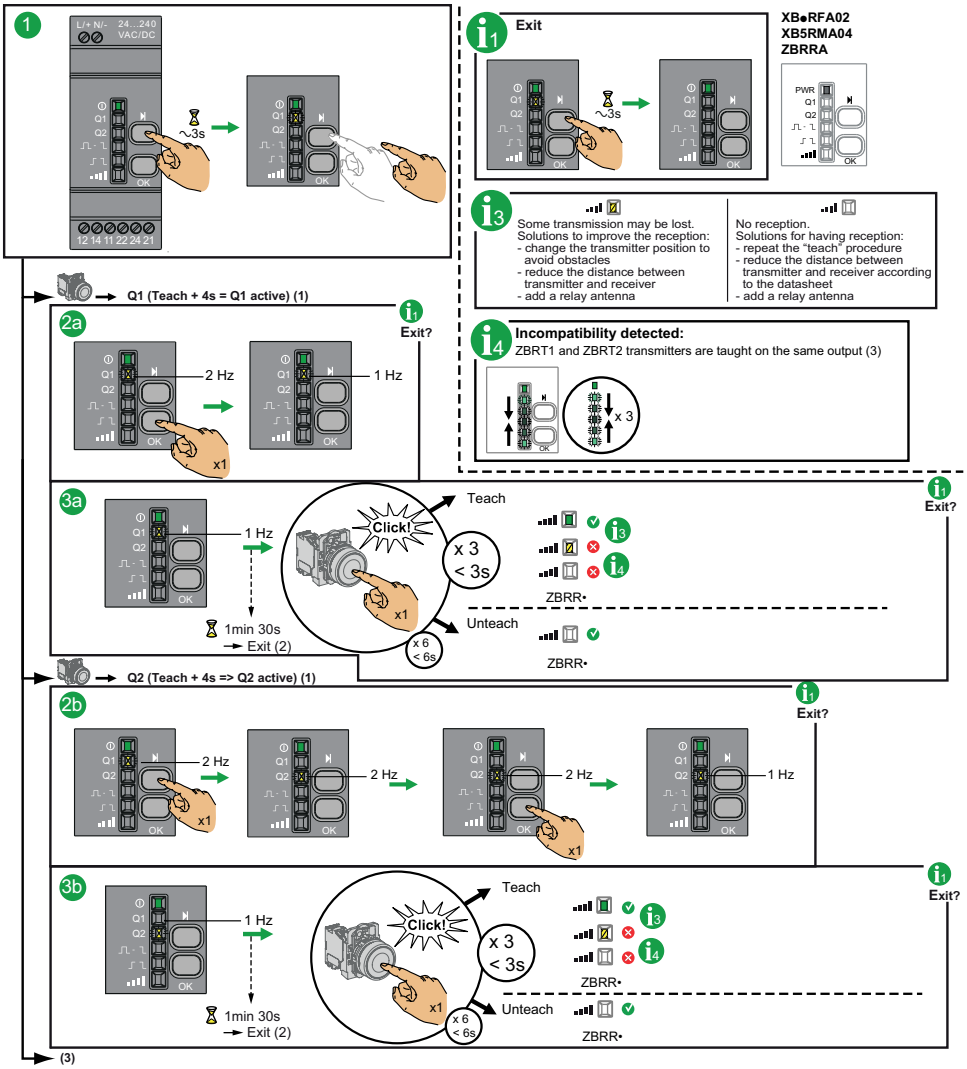

Bistable Output

Only for ZBRRA.

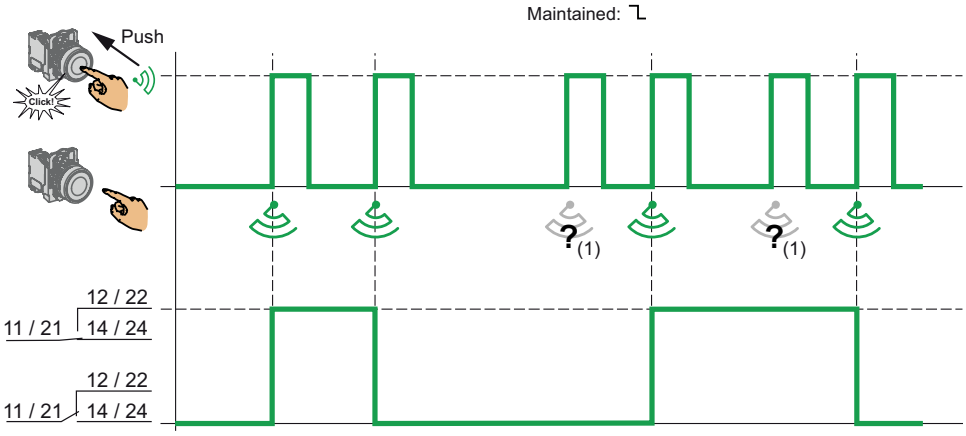

(1) If the radio message is not received, the operator has to repeat the command.

⚠ WARNING
COMMAND NOT EXECUTED If the radio message is not received, the operator has to repeat the command. **Failure to follow these instructions can result in death, serious injury, or equipment damage.**

Disable/Enable Output Standard Operation

Only for ZBRRA.

This function requires two transmitters ZBRT1.

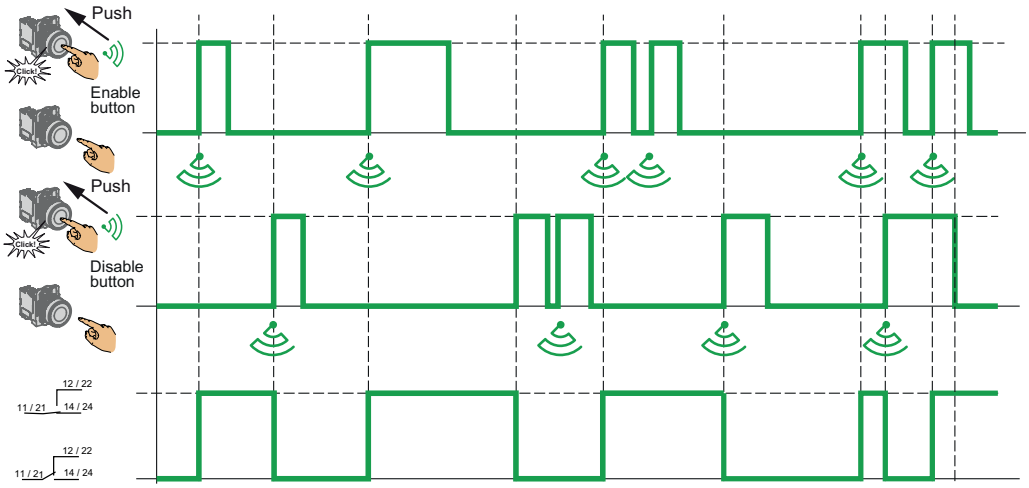

(1) The Enable and Disable radio messages are sent when the buttons are pressed. By this, the Disable button has not priority over Enable button.

Momentary Output

This output mode is active for ZBRRA, and ZBRRC, only when the ZBRT2 transmitter is used:

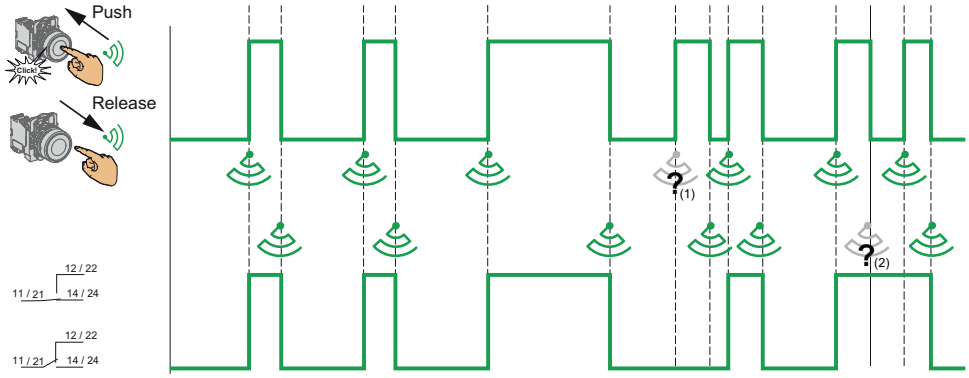

(1) Signal lost: Release and push again to resynchronise

(2) Signal lost: Push and release again to resynchronise

Power Interruption and Restore Management

If the duration of a power interruption is less than the power supply filtering time (approx. 7 ms), there will be no impact on the receiver, which continues normal operation. Power interruptions longer than the filtering time cause the product to restart when power is back. At restart the outputs will be in their initial states with LEDs off.

Changing outputs from Monostable to Bistable for ZBRRA

Procedure

This procedure shows how to change Q1 and Q2 outputs from Monostable to Bistable.

The icons shown have the following meanings:

On	Flashing	Monostable	Bistable
■	☼	⎍	⎿

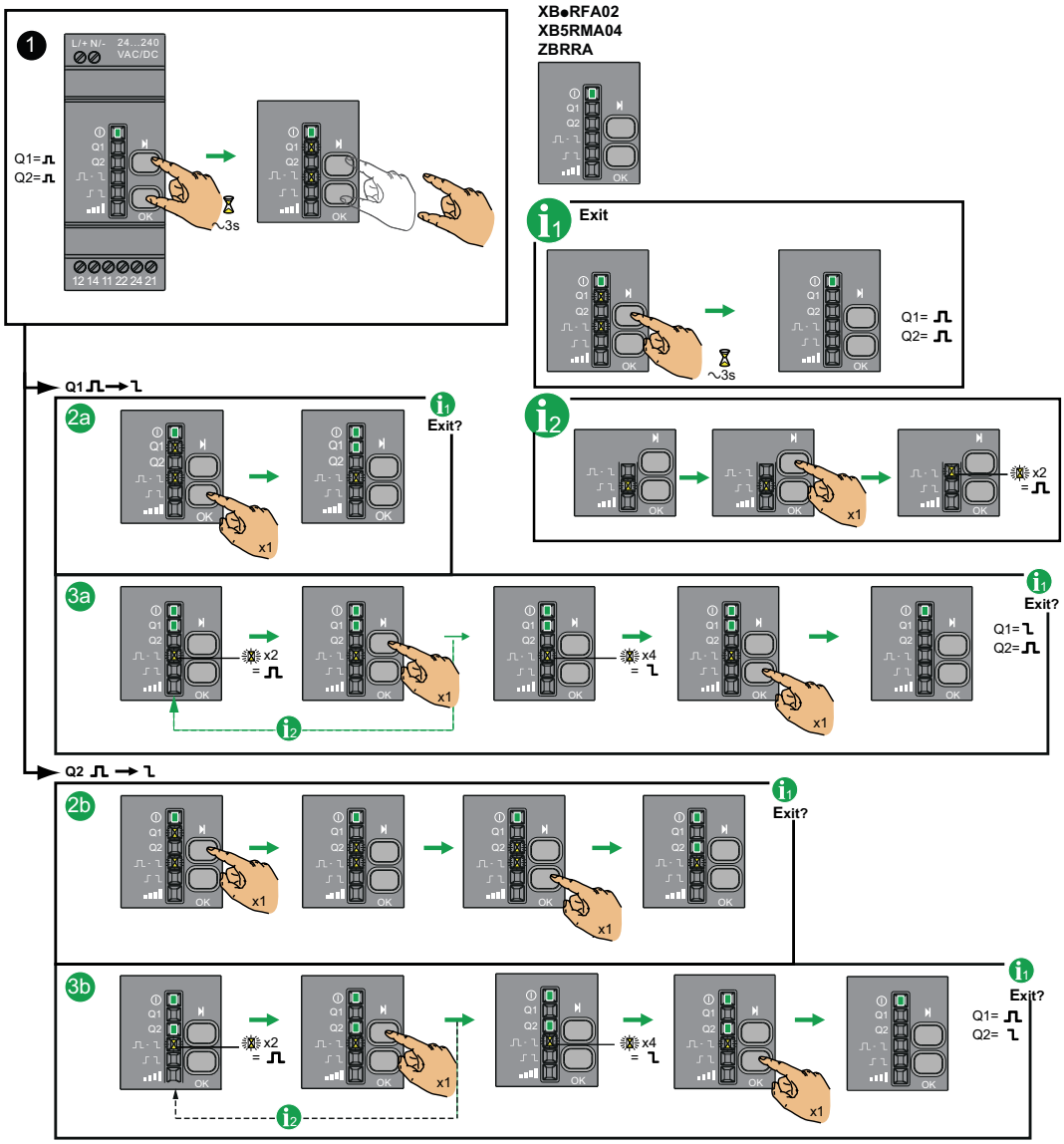

Changing Outputs From Monostable to Disable/Enable for ZBRRA

Procedure

This procedure shows how to change from Monostable to Disable/Enable for Q1 and Q2.

The icons shown have the following meanings:

On	Flashing	Monostable	Disable/Enable

NOTE: When changing the output from Monostable to Disable/Enable, all the registered ID for this output will be automatically canceled from the receiver memory.

For information this also happens for the three following cases:

- From Bistable to Disable/Enable.
- From Disable/Enable to Monostable.
- From Disable/Enable to Bistable.

When changing the output from Monostable to Bistable, or Bistable to Monostable, the registered ID are not cancelled from the receiver memory.

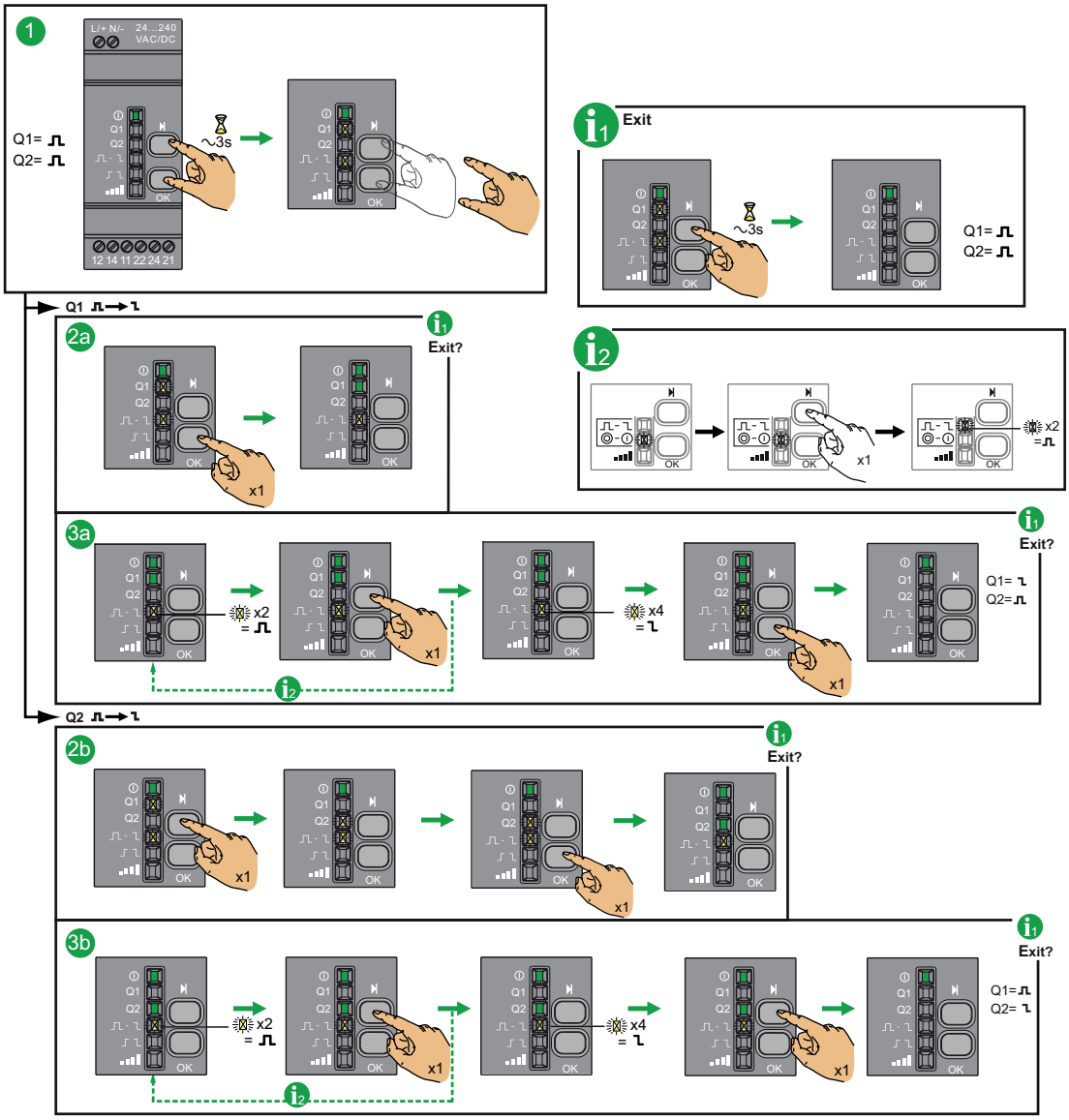

How to Teach/Unteach Monostable, Bistable or Momentary Outputs for ZBRRA, and ZBRRC

Procedure

This procedure shows how to Teach/Unteach Q1 and Q2 outputs (ZBRRA) and Q1, Q2, Q3 and Q4 outputs (ZBRRC) when using Monostable or Bistable outputs.

NOTE: It is possible to store a maximum of 64 ID. For example, 64 ID on Q1 output and 0 ID on Q2 output, or 44 ID on Q1 output and 20 ID on Q2 output, can be stored on ZBRRA, and ZBRRC.

When trying to teach a 65rd ID, all LEDs (except the power LED) flash quickly. This 65rd ID is not taught.

The icons shown have the following meanings:

Green	Yellow	Flashing	Monostable	Bistable	Disable/ Enable

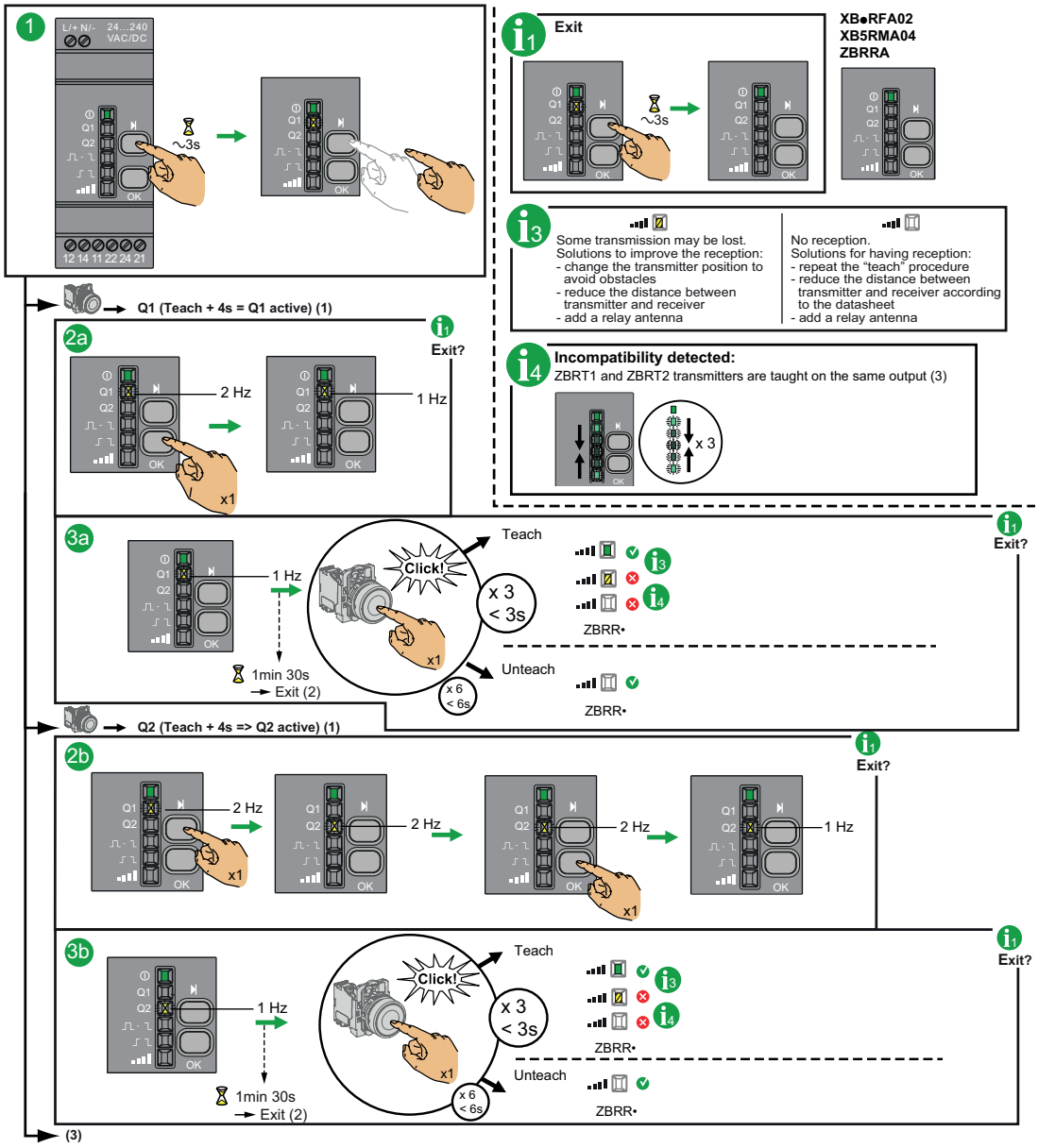

1: The Q1, Q2, Q3 or Q4 outputs will be active only 4 s after the teaching procedure.

2: The teaching procedure must be performed within 1 min 30 s.

3: The teach procedure on Q3 and Q4 outputs is the same. The Q3 or the Q4 output must be selected and when the Q3 or Q4 LED is flashing at 2 Hz, the button can be taught.

How to Teach Disable/Enable Outputs for ZBRRA

Preliminary Information

By default, the relay option is Monostable. Before proceeding, change the relay option to Disable/Enable. Changing Outputs From Monostable to Disable/Enable, page 50 for more information.

Procedure

This procedure shows how to teach Q1 and Q2 outputs when using Disable/Enable outputs.

The icons shown have the following meanings:

Green	Yellow	Flashing	Monostable	Bistable	Disable/ Enable

NOTE: It is possible to store a maximum of 64 ID. For example, 64 ID on Q1 output and 0 ID on Q2 output or 44 ID on Q1 output and 20 ID on Q2 output, can be stored on ZBRRA.

When trying to teach a 65rd, all LEDs (except the power LED) flash quickly.

This 65rd ID is not taught.

⚠ WARNING

UNINTENTED EQUIPMENT OPERATION

Do not leave the receiver without taught Disable button.

Failure to follow these instructions can result in death, serious injury, or equipment damage.

NOTE: For the teach procedure the Disable buttons must be taught before the Enable ones. If you start by teaching a Enable button (without any Disable button taught) all the LEDs flash. For the unteach procedure all the Enable buttons must be untaught before the Disable ones.

How to Teach Q1 for Disable/Enable

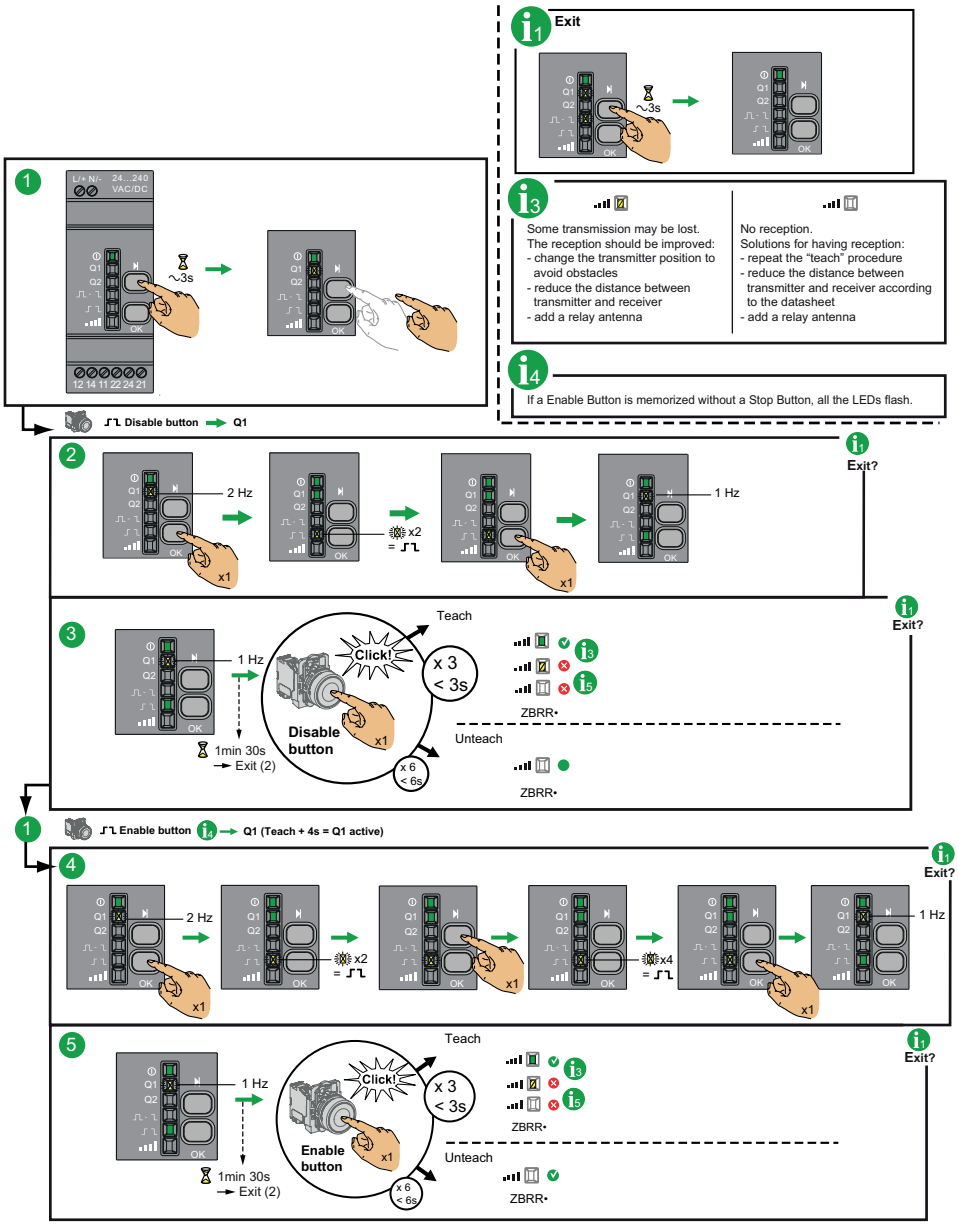

1: The Q1 output will be active only 4s after the teaching procedure.

2: The teaching procedure must be performed within 1min 30s.

How to Teach Q2 for Disable/Enable

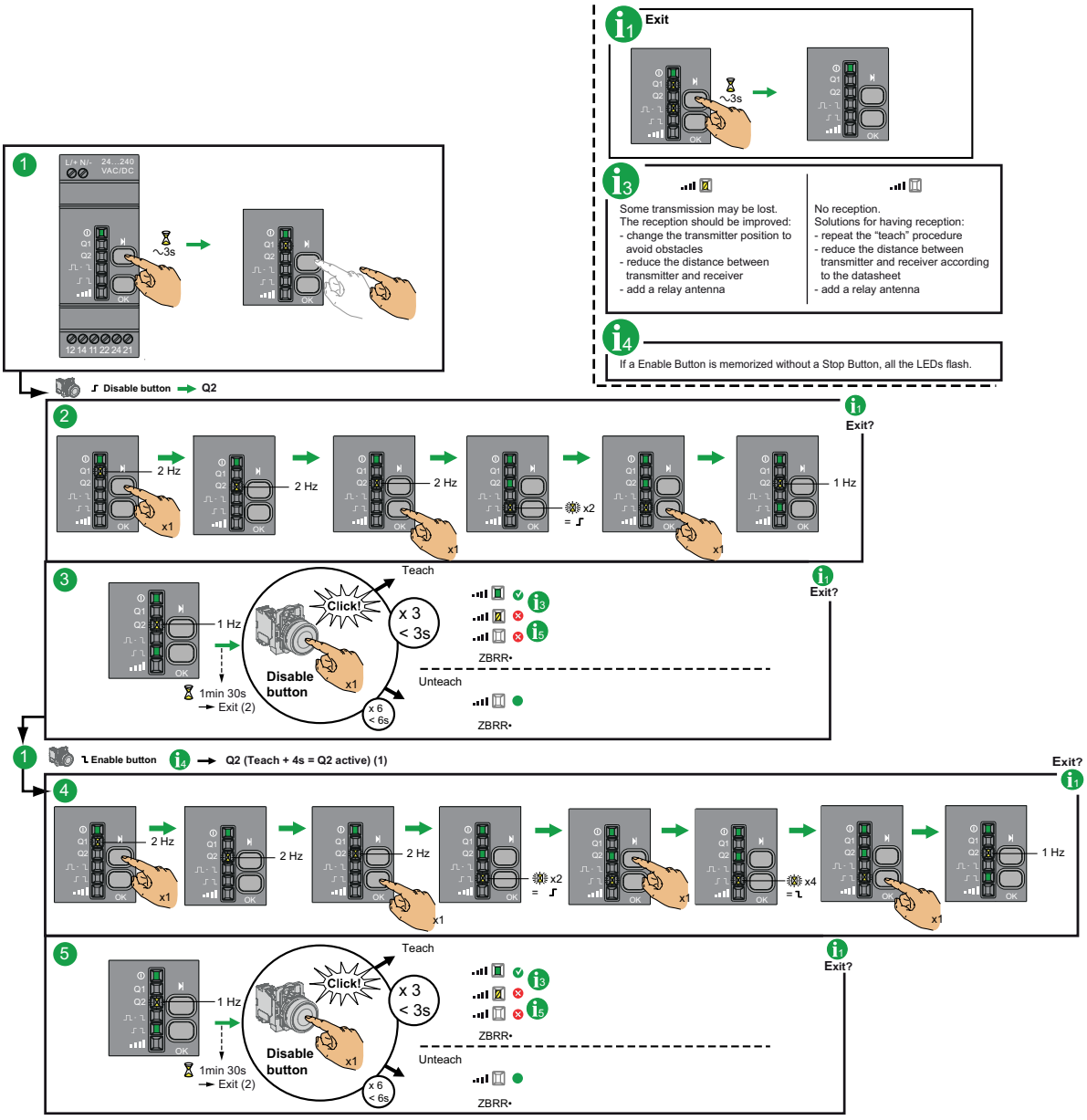

1: The Q2 output will be active only 4s after the teaching procedure.

2: The teaching procedure must be performed within 1min 30s.

Lock/Unlock for ZBRRA and ZBRRC

Introduction

Lock enables to block the menus access by non authorized persons. The functioning of the receiver is not affected.

Mechanical Lock/Unlock

The following diagram shows how to perform buttons mechanical lock:

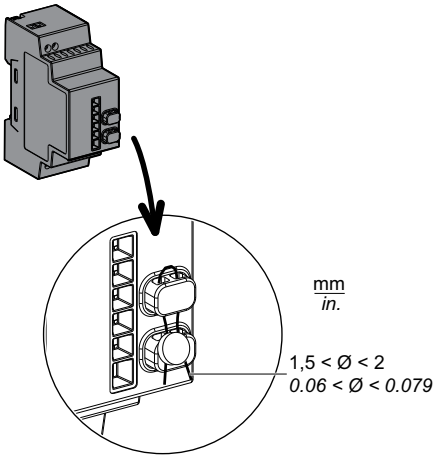

Electronic Lock/Unlock

This procedure shows how to electronically lock/unlock the receiver:

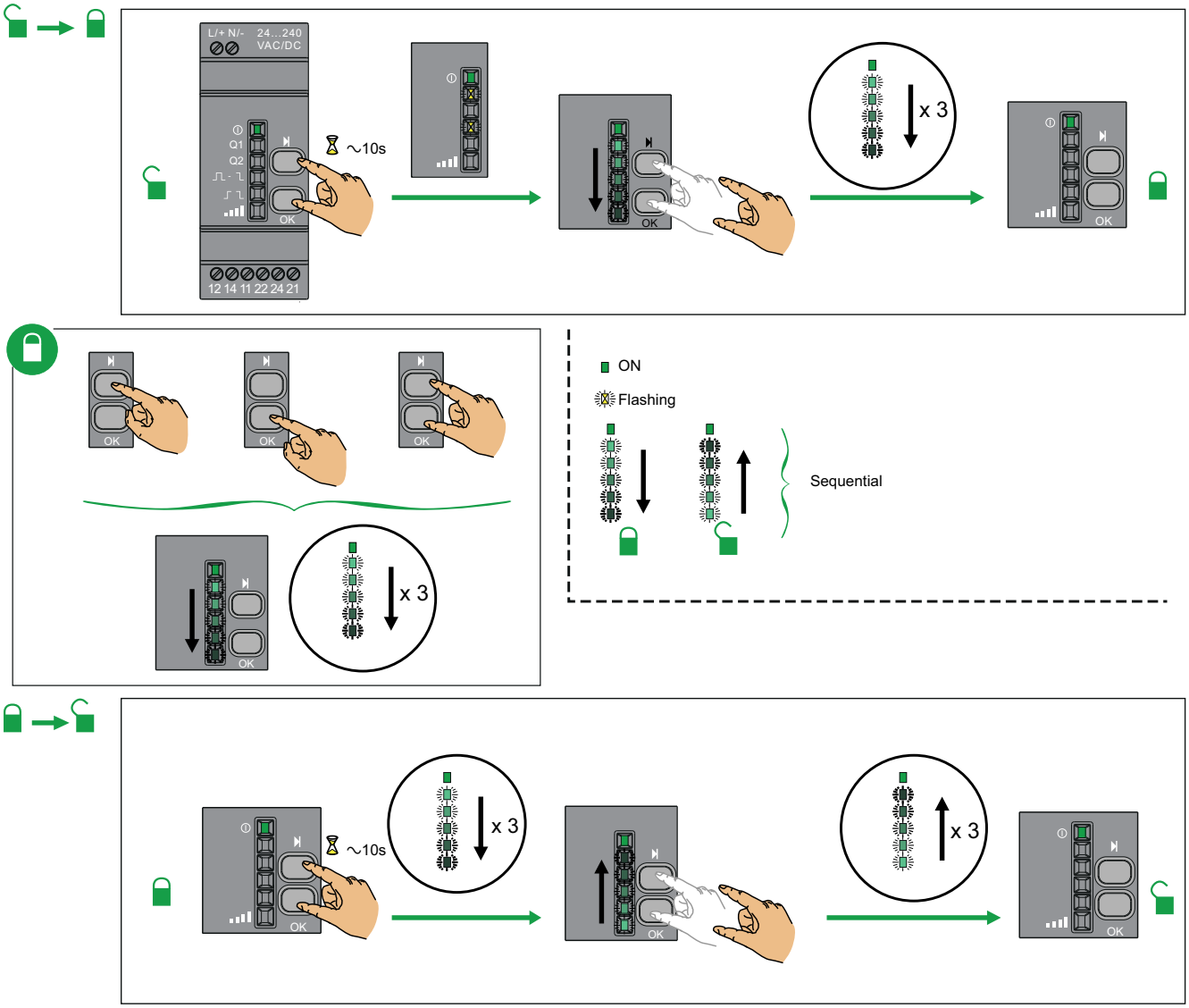

Other Functions for Harmony XB5R

Other Functions Description

Total Reset Procedure for ZBRRA, and ZBRRC

Total Reset: After a Total Reset the receiver is on factory settings:

- All outputs are set to Monostable function,
- All the registered ID are deleted,
- All outputs are set to 0.

For ZBRRA:

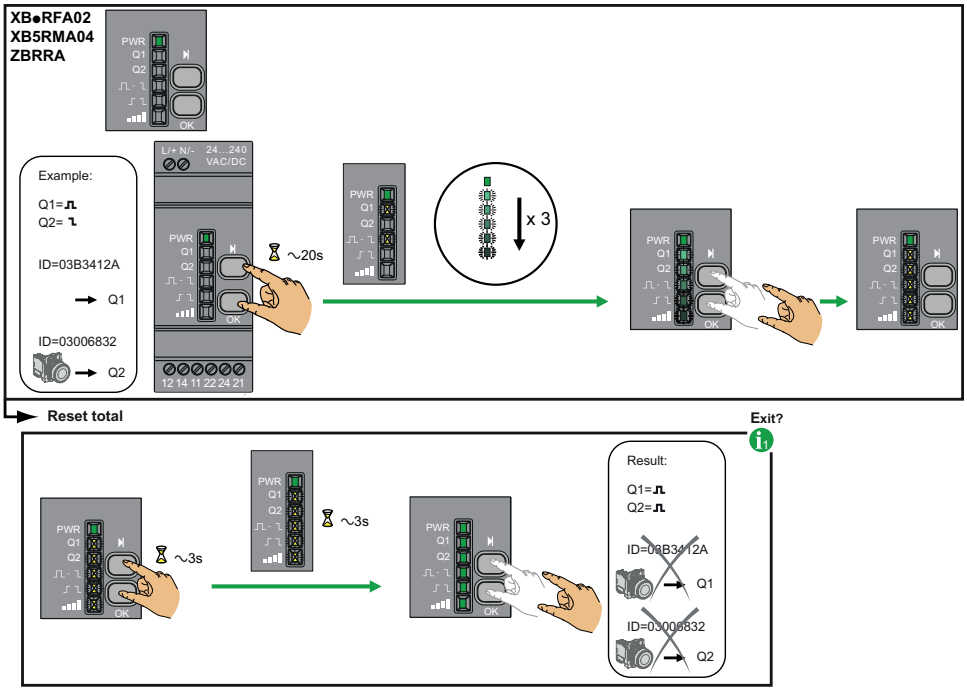

For ZBRRC:

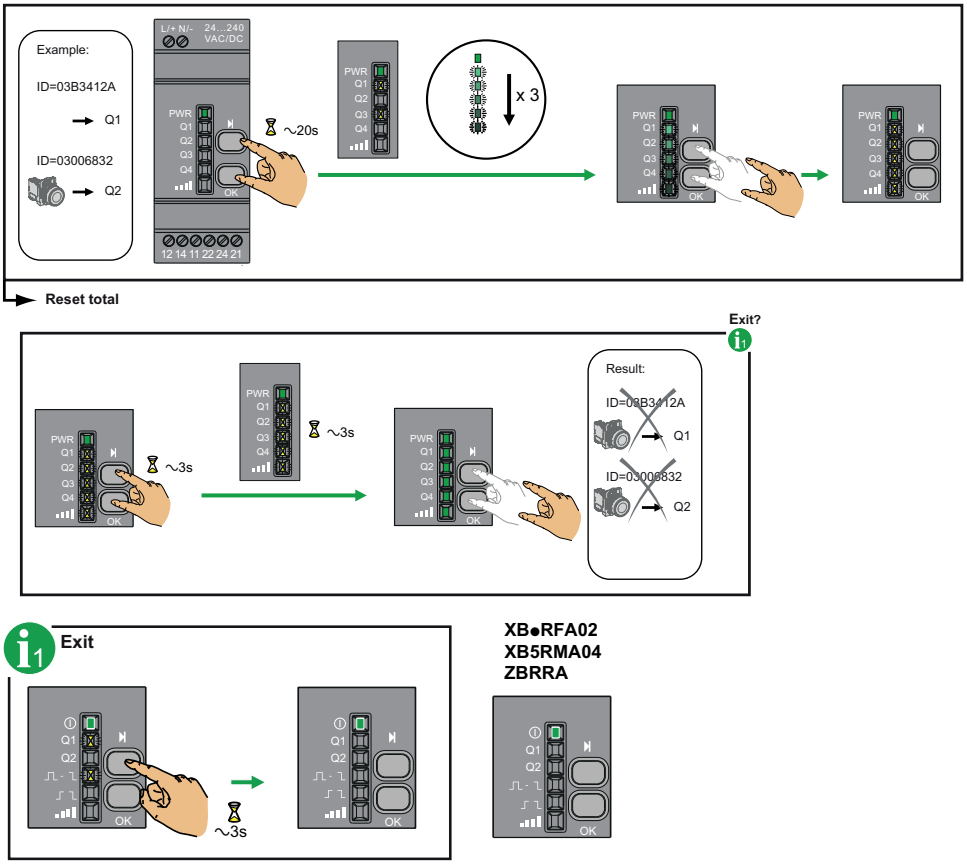
Example:
ID=03B3412A
Q1
ID=03006832
Q2
L/+ N/-
24...240 VAC/DC
PWR
Q1
Q2
Q3
Q4
OK
12 14 11 22 24 21
~20s
x 3
Reset total
~3s
Exit?
Result:
ID=03B3412A
Q1
ID=03006832
Q2

Exit
Q1
Q2
OK
~3s
XB●RFA02
XB5RMA04
ZBRRA

Schneider Electric
35 rue Joseph Monier
92500 Rueil Malmaison
France

+ 33 (0) 1 41 29 70 00

www.se.com

As standards, specifications, and design change from time to time, please ask for confirmation of the information given in this publication.

© 2026 Schneider Electric. All rights reserved.

EIO0000000812.06