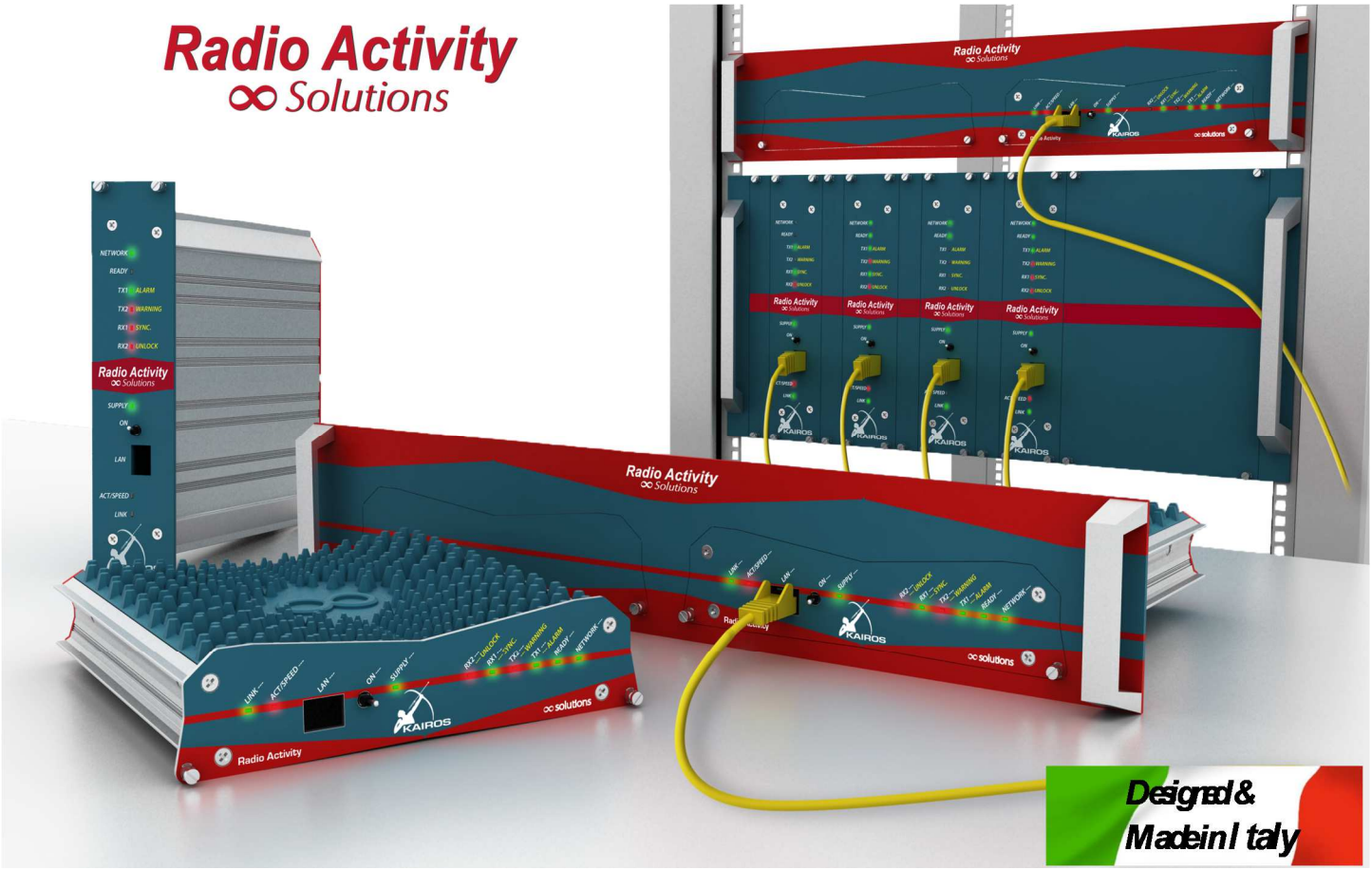

KAIROS User Manual

Version 1.4

Radio Activity S.r.l.

Via De Notaris, 50 - 20128 Milano- Italy – email: comm@radioactivity-tlc.it - www.radioactivity-tlc.com
Tel. +39.02.36514205 - FAX/Voicebox +39.1782.242408 - CCIAA Milano N° 1728248 - VAT Id. 04135130963

Summary

1 FOREWORD 6

1.1 LOCAL LAWS RESTRICTIONS 6

1.2 DOCUMENT COPYRIGHTS 6

1.3 DISCLAIMER 6

1.4 MODIFICATIONS 6

2 PRODUCT SAFETY 7

2.1 RF EXPOSURE COMPLIANCE 7

2.2 IMPROPER USE 7

2.3 POWER SUPPLY 8

2.4 ANTENNA SYSTEM / LIGHTNING 8

3 RADIO DESCRIPTION 9

3.1 FRONTAL PANEL 9

3.2 RADIO STATUS LED 11

3.2.1 LINUX booting status 11

3.2.2 DSP booting phase 12

3.2.3 Led during radio calibration 13

3.2.4 Radio Led during regular function status 13

3.2.5 Maintenance status 14

3.3 REAR PANEL 14

3.3.1 RX inputs specifications 15

3.3.2 TX output specifications 16

3.3.3 GPS antenna 17

3.3.4 Power supply 21

3.3.5 I/O ports 22

3.4 OPTION BOARDS 25

4 INSTALLATION AND MAINTENANCE 26

4.1 IMPROPER USE 26

4.2 THERMAL DISSIPATION 26

4.3 POWER SUPPLY SYSTEM 26

4.4 ANTENNA 27

4.4.1 Maximum permitted antenna gain for mobile usage 27

4.4.2 Maximum permitted antenna gain for fixed usage 27

4.5 AF INTERFACE 28

4.6 MANUAL SETTINGS 28

4.7 SELF-TEST PROCESS 28

4.8 PPS SIGNAL 28

4.9 ON SITE CHECK LIST 28

4.10 IP DISCOVER 30

4.11 PREVENTIVE MAINTENANCE 30

5 PARAMETERS CONFIGURATION AND REMOTE CONTROL 31

5.1 SIP/RTP GATEWAY 32

6 ENGINEERING SPECIFICATIONS 33

6.1 KAIROS VS RA-XXX COMPARISON 33

6.2 RADIO FREQUENCY 34

6.2.1 Transmitter 34

6.2.2 Receiver 34

6.3 IP INTERFACING 35

6.3.1 LAN protocols 35

6.3.2 Ports and connectors 35

6.3.3 LAN requirements 36

6.3.4 Codec VoIP 36

6.3.5 SNMP protocol 36

6.4 GPS/GLONASS ANTENNAS 37

6.4.1 GPS/GLONASS antenna requirements 37

6.5 FREQUENCY BANDS 37

6.6 BRANCHING REQUIREMENTS 38

6.6.1 TX to antenna duplex isolation requirements @10W TX RF power 38

6.6.2 Suggested RX max input limits on unwanted signals 38

6.7 OTHER SPECIFICATIONS 38

6.7.1 Environmental parameters 38

6.7.2 Power supply 39

6.7.3 Mechanical characteristics 39

6.7.4 Audio balanced interfaces 39

7 REGULATIONS COMPLIANCE 40

7.1 NOTICE FOR EC USERS 40

7.2 NOTICE FOR US USERS 41

7.3 NOTICE FOR CANADIAN USERS 41

KAIROS – User manual

Thank you for your purchase of this product.

KAIROS comes out from the best Italian tradition, where all details, also the invisible ones, are important and need a care. Designing a mobile radio infrastructure is an art, that needs a complete knowledge of all the possible aspects to avoid unexpected situations. Our long experience in building infrastructure has generated this professional transceiver: the right building block for a number of applications ranging from a simple standalone repeater to a national wide system. We solved the complexity to ease your creativity.

Main characteristics:

Available Models	**Model**	KA-080	KA-160	KA-350	KA-450	KA-500	KA-900
	MHz	66-88	136-174	350-410	400-470	450-527	806-941
Channelization	25/20/12,5/6,25 KHz						
RF output power	1-25 W / 100% duty cycle / selectable per channel						
Synthesis step	50Hz						
Frequency stability	0,5 p.p.m. (without GPS or digital correction)						
Synchronization sources	Internal ref., GPS/GLONASS, Ethernet IEE-1588v2, 2 wire, Digital RX, External						
Operating temperature	-30°C ÷ +60°C						
Power supply (negative ground)	Min.		Typ.			Max.	
	11V		13,2V			15V	
Power consumption	TX: 60 W @25W RF / RX: 5 W @Main+Div enabled						
Dimensions & weight	160x200x45mm / 1.4Kg						
Audio lines	2x 4 wires + E&M						
LAN port	Ethernet 10BT/100TX (auto MDI/MDI X) on an RJ45 socket						
IP multisite bandwidth	70 kb/s in analog to/from Master 24 kb/s in DMR to/from Master (both DMR timeslots)						
Max tolerable IP delay	960ms (round trip)						
Alarm & control I/O	1xInput + 7xOutput						
Auxiliary I/O	4xInput + 1xOutput + 1xAnalog input						

1 Foreword

This manual is intended for use by experienced technicians familiar with RF and IP technology. It contains information required for installation, setup and maintenance of a **KAIROS** based radio infrastructure.

1.1 Local laws restrictions

The use of this product is subjected to the local laws and in most cases requires a specific license. As example, it may be prohibited in some RF bands or part of them, or may be limited in the RF power. Please, verify the local law requirement before to use the equipment.

1.2 Document Copyrights

No distribution or duplication of this document or any portion of it shall take place without the express written permission of Radio Activity. No part of this manual may be reproduced, distributed, or transmitted in any form for any purpose without the express written permission of Radio Activity.

1.3 Disclaimer

The information in this document are carefully controlled, up-dated and are believed to be entirely reliable. However, no responsibility is assumed for inaccuracies. Furthermore, Radio Activity reserves the right to make changes to any products herein to improve readability, function, or design. Radio Activity does not assume any liability arising out of the applications or use of any product or circuit described herein; nor does it cover any license under its patent rights nor the rights of others.

1.4 Modifications

CAUTION: Changes or modifications not expressly approved by Radio Activity may void the user's authority to operate the equipment legally, as well as any warranty provided.

2 Product Safety

2.1 RF Exposure Compliance

FCC Guidelines described in the OET Bulletin 65, state limits for maximum permissible exposure (MPE) and specify the maximum power density for “General Population/Uncontrolled Exposure”.

This limit is 0.2 W/m² for VHF band (30-300 MHz) and f/1500 for UHF band (300-1500 MHz). It implies a constraint in terms of the minimum distance which people must keep from transmitting antenna, in order to maintain the human exposure under the allowed limit.

With the assumption that a collinear omnidirectional antenna is used with a medium/high gain of 8dBi (=6.3 numeric) and that the transmitter is set at its maximum power (30W, if a +20% is considered as possible effect of tolerance), it is possible to calculate the minimum distance of people from the antenna by using the following equation for RF power decay in free space (far field):

$$S = (P \times G / 4 \times \pi r^2)$$

where:

S = maximum power density
P = maximum transmitted RF power
G = antenna gain
R = distance from antenna.

This gives:

$$r = \sqrt{(P \times G / S \times 4 \times \pi)}$$

For VHF (150-174MHz) equipment the minimum safety distance is r = 2,75 m.

For UHF (407-470MHz) equipment the minimum safety distance is r = 2,36 m.

In particular for the following sub-bands, 406.1-430MHz (by IC and FCC), 450-512MHz (by FCC) 450-470 MHz (by IC) with the maximum permitted (by IC and FCC) antenna gain of 9.1dBi (see par 4.4.2), the minimum safety distance is 3.2m up to 470MHz; 3.1m from 470MHz up to 512MHz.

For further information on human RF exposure, contact your local health department. For example, Health Canada’s Safety Code 6 provides a comprehensive set of guidelines.

For mobile usage, this transmitter must not be co-located or operating in conjunction with any other antenna or transmitter.

2.2 Improper use

It is recommended to install the equipment in closed cabinet, to allow only authorized people to access to them, in order to avoid handling or improper use of equipment and to avoid accidental contact with hot surfaces.

2.3 Power supply

The equipment requires a 13.2Vdc/5A, negative grounded, power supply. It is recommended to insert a 10A fuse in the power supply cable near the power supply source (e.g.: a battery) to avoid dangerous damage due to lightening event or to accidental short circuits along power supply cables.

The equipment is designed to be powered by a safe supply source which grants a double insulation of output voltage from dangerous voltages. The electric plant must contain a switch to cut off power supply lines, according to national law and directives.

Use only certified power supply devices and connect a ground cable to the GND Ø5MA nut to avoid lightning and rescue problems. Remember that a lightning on the antenna system could pass the RF discharger arriving to the chassis of the equipment. A robust GND cable short the energy preserving the other equipments in the same site.

2.4 Antenna system / lightning

Providing adequate lightning protection is critical to a safe reliable communications site. Unless **KAIROS** has got many protections, RF transmission cables, and AC and DC power lines must all be protected to prevent excessive lightning energy from entering the site.

To reduce lightning problems, use lightning rod on the top of the radiating tower; anchor strongly the metallic parts of the tower to the GND plane.

Insert, in coaxial cables coming from the antennas, adequate RF dischargers **before to enter** in the shelter and connect them shortly to the extern GND plane.

3 Radio description

KAIROS is a very sophisticated digital transceiver, target for high performance professional use.

Its architecture provides the capability of supporting a number of features resulting in a extremely flexible two-way radio communications solution. Due to its flexibility, the complete parameters programming is not an easy task. To perform a perfect programming to match the desired application, it is required a very skilled and expert technician. Radio Activity strongly suggest to require a complete programming of the equipments from Factory before the expedition.

In the following we suppose that the equipments are already programmed for the application. Only the setup of minor items will be described.

3.1 Frontal panel

The following picture shows the frontal panel of **KAIROS**.

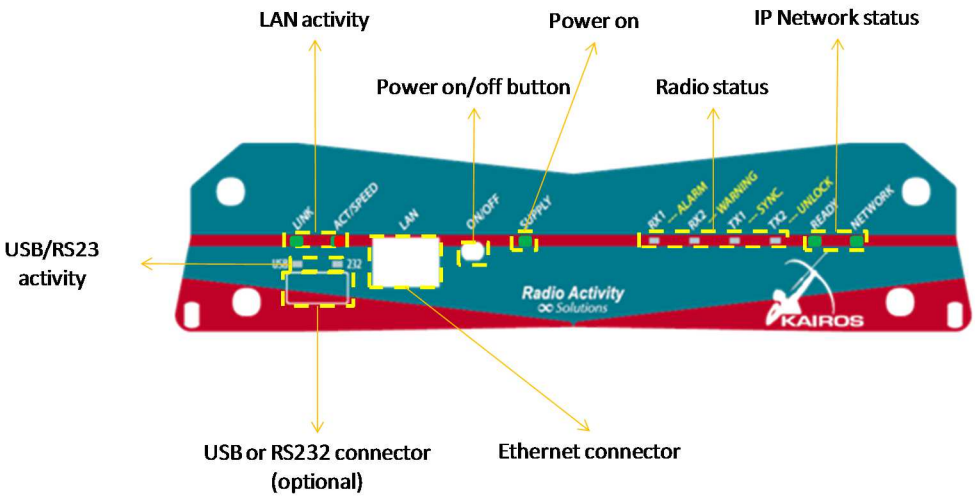

In the frontal panel there are 2 connectors:

1. 10BT/100TX Ethernet connector for the remote control of the equipment and for data/audio packets communication

2. optional RS232 (115.2Kbit/sec, 8,N,1) **or** USB serial port for remote controlling the equipment by a PC or for special purposes. The USB/RS232 led indicate the presence and the activity of these serial port.

In the frontal panel there are also the power on/off button and some dual color LEDs for monitoring the status of the equipment:

- power on/off button; pressing this button once for 150ms to 4 seconds the equipment is powered on. To switch off the equipment, press the button for at least 2 sec: the Radio Status led will start a RED fast lamping for 2 sec to advise the user that the equipment is starting the shutdown procedure, then the lamping becomes GREEN and slow to indicate that the equipment is ready to switch off.

Now, releasing the button, the equipment switches off. Note that the last on/off condition will be saved also in case of power supply break therefore the equipment will automatically switch on after a black out. At equipment switched off, pressing this button for at least 4 sec, the equipment goes in "IP discover status". See the related chapter for additional information.

- LAN Activity led; the LINK led green indicates the Ethernet signal presence, the ACT/SPEED led indicates the LAN traffic and the Ethernet speed (green = 100Mb/s, red=10Mb/s).
- Supply led; when green it indicates that the equipment is correctly supplied. When the input voltage is outside the equipment limits (too low or too high), this led becomes red. When off it indicates that the equipment is switched off or an inverted polarity of power supply connection.
- IP network status led; the READY led becomes green when the LINUX O.S. and DSP are running correctly and the equipment is ready for operation. The led NETWORK is:
    - flashing slowly (1 sec) green when the equipment is correctly registered to its Master station
    - flashing red when a Master station is defined but the equipment isn't correctly registered to it
    - off when in standalone mode (e.g.: single repeater / mobile)
- Radio status led; these led reports many run time information about the status of the equipment. During the regular functioning, Radio Led carry the following information:

Led	Status
TX 2	slow flashing green => warning, the startup loop test failed
	green => the TX Timeslot 2 DMR is on air
	red => the equipment is performing the internal calibration/test
	fast flashing red => fail: the TRX is not functioning
TX 1	slow flashing green => warning, the Audio Loop test failed
	green => the TX Timeslot 1 DMR is on air
	red => the equipment is performing the internal Audio Loop test
	fast flashing red => fail: the TX is unlocked or not functioning
RX 2	green => the RX Timeslot 2 DMR is busy (RX active) or the Squelch is open (a carrier is detected)
	slow flashing red => warning: the time/frequency synchronization is lost
	fast flashing red => fail: the RX diversity is not functioning
RX 1	green => the RX Timeslot 2 DMR is busy (RX active) or the Tone code squelch is detected
	slow flashing green => the PPS signal is present and locked (for 1 sec every 9 sec)
	slow flashing orange => the PPS signal is present but not locked
	slow flashing red => warning: the PPS signal is **not** present
	fast flashing red => fail: the RX main is not functioning
ALL LED	orange for 1 sec every 9 sec => The TRX is not active (in a 1+1 assembly only)

These led report also the equipment status during the boot/startup phase; see the paragraph below for a detailed explanation.

3.2 Radio status led

The “RX1 – RX2 – TX1 – TX2” led assume different meaning during the functioning. There are four main conditions where they give different groups of information: 1) LINUX booting state, 2) DSP booting state, 3) radio calibration/self test state, 4) regular function state, 5) switching off, 6) maintenance state.

3.2.1 LINUX booting status

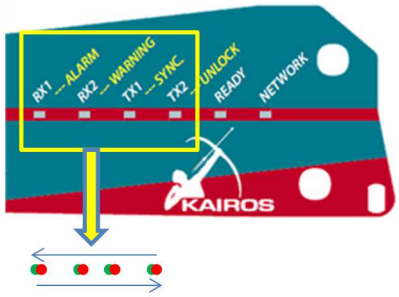

Pressing the power on/off button for at least 250ms, the equipment is powered on and starts to load programs.

The FPGA is the first internal device that starts its job testing all internal clocks and other essential signals. The RX1 – RX2 – TX1 – TX2 led, directly managed by the FPGA, give indications about the HW status until the LINUX processor is running when the Ethernet connection isn’t available.

If all internal signals are ok, these led alternate green and red lamping, moving from right to left (red) and vice versa (green) indicating the LINUX O.S. start up phase. This condition appears until the LINUX and DSP SW are running.

In the case the running condition doesn’t appears (wait at least 10-15 seconds from the power on), and the led continue to move left and right, the LINUX SW or the DSP SW may be corrupted or not valid, therefore the equipment can’t operate.

If the condition that led continue to move left and right doesn’t appear in 1-2 seconds from the power on, the FPGA has detected a fail in internal signals. In case of this situation, please contact the Technical Assistance. For your knowledge, in this case these led are indicating the type of fail as follow:

RX1: a fast red/green flashing of this led indicates that there is at least one fail in the internal clock/signal. The fail should be indicated by the other led as explained in the following.

RX2: it reports the 40MHz DPS clock status as follow:

Slow green flashing	DPS clock is ok
Fast green flashing	DPS clock is present but unlocked
fast red flashing	DPS clock is absent

TX1: it reports the 20MHz LINUX clock status as follow:

Slow green flashing	LINUX clock is ok
Fast green flashing	LINUX clock is present but unlocked
fast red flashing	LINUX clock is absent

TX2: it reports the 12,8MHz Reference clock status as follow:

Slow green flashing	Reference clock is ok
fast red flashing	Reference clock is absent

Finally, a correct equipment startup should happen as follow:

1) Supply led becomes green pressing the on/off button

2) RX1 flashes fast red/green for less than 1 sec

3) RX1 – RX2 – TX1 – TX2 led continue to alternate on/off red/green, moving left and right for 10-15 sec

4) RX1 – RX2 – TX1 – TX2 led go off for 1 sec and then start to indicate the DSP booting phase as described in the next paragraph

3.2.2 DSP booting phase

Once the LINUX O.S. is ready, the DSP starts. This condition is indicated by all Radio Led off condition and the ending of the alternate on/off red/green, moving left and right indication.

DSP starts to check all its internal peripherals and report results on the Radio Led, step by step, as follow:

1. It verifies the FPGA to DSP communication and the status of all essential internal signals. If the result is ok, the Radio Led “TX2” becomes green and the DSP go to the next step.

2. The DSP checks audio peripherals, closing them in both digital and analog loops. If the result is ok, the Radio Led “TX1” becomes green and the DSP go to the next step. If the result is fail, the Radio Led “TX1” becomes red and the DSP stops. The LINUX processor should start the DSP again in 5-10 sec. This condition (DSP continuous restarting) is maintained until this test is surpassed. If this condition appears, it’s very probable an HW problem. Please contact Factory for repairing the unit.

3. The DSP programs and checks IF peripherals. If the result is ok, the Radio Led “RX2” becomes green and the DSP go to the next step. If the result is fail, the Radio Led “RX2” becomes red and the DSP stops. The LINUX processor should start the DSP again in 5-10 sec. This condition (DSP continuous restarting) is maintained until this test is surpassed. If this condition appears, it’s very probable an HW problem on RX parts. Please contact Factory for repairing the unit.

4. The DSP calibrates the IF and internal DAC/ADC.

5. DSP requests to LINUX the EEP saved setup parameters. When all parameters are correctly received, the Radio Led “RX1” becomes green and the DSP go to the next step.

6. Radio Led test. This test may be useful to check the real functioning of all led. All Radio Led are switched on green for 1 sec. Then they are all switched on red for 1 sec, and again all switched on green for 1 sec.

7. DSP startup phase is ended and the Radio Led are switched off.

The next operation of the startup is the radio calibration as described in the following paragraph.

3.2.3 Led during radio calibration

When LINUX and DSP programs are running and all the internal signals are checked by the FPGA, the equipment starts the calibration/self test procedure. The procedure executes always a minimum set of measurements to check the equipment basic functionalities (fast TX=>RX loop test). Many other automatic tests can be required (distortion, audio response, deviation accuracy, XTAL filter responses, …) but, since they blocks the equipment for some tens of seconds, their use has to be required via the setup tool. If these optional tests are not required, the setup tool indicate the last value registered.

The self tests can be required at every time, not only after a reset, via the setup tool.

During the calibration/self test phase the Radio Led "TX2" indicates that:

- Red color, slow flashing => test is running
- Green color, slow flashing => test is finished with fail result
- Off => test is finished ok

If the result of a test isn't good, the "TX2" led maintains the green flashing status also when the calibration is finished to indicate a warning condition.

Note: a calibration fail is not necessary a failure indication. Since these test are very accurate and selective, in many cases a failure indication can be due only to local disturbs received from the antenna or from a temporary condition. Therefore this indication should be considered as warning state not as fail state. In case of doubt, try to repeat the calibration test or contact Factory.

3.2.4 Radio Led during regular function status

Once booting and calibration/test phases are ended, the equipment starts normal operation. The default channel is loaded into PLLs and the equipment search the other radio Network elements (e.g.: the Master station). At the same time the DSP synchronizes the internal time and clock on the defined source (e.g.: GPS receiver).

See the main paragraph "Frontal Panel" for the table explaining the meaning of these led during the regular functioning.

Note: Special version or customized SW may differ in indications.

3.2.5 Maintenance status

See the “IP discover procedure” described in a following paragraph to enter into the maintenance status and the related led signaling.

3.3 Rear panel

The following picture shows the rear panel of **KAIROS**.

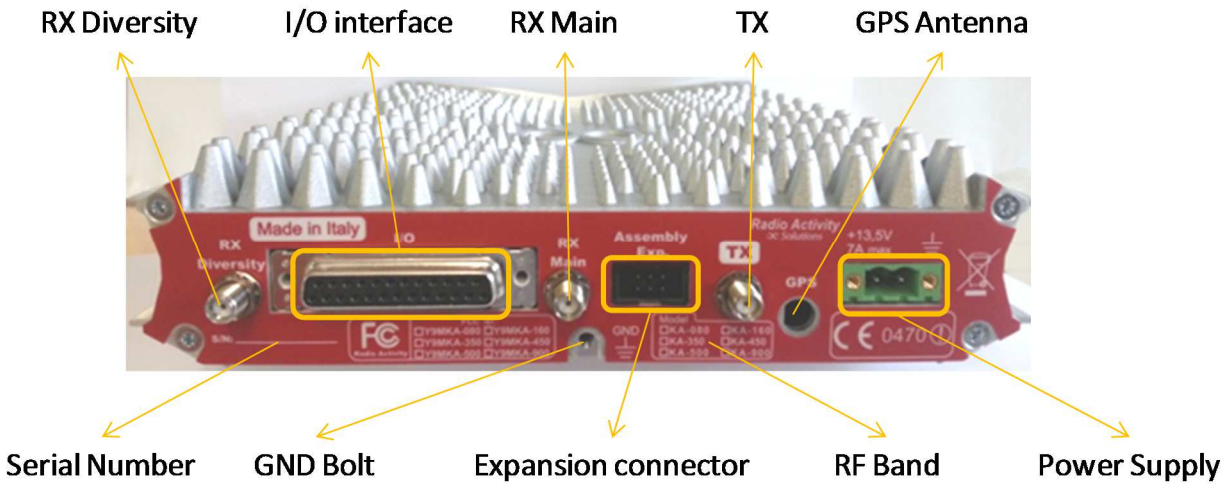

In the rear panel there are (up to) 7 connectors:

- RX diversity/main – female SMA-type connector. They are the input of the diversity/main channels of the receiver. they are ground referred to discharge eventual static voltage, 50 Ohm of RF impedance. Don’t apply continuous voltage to these inputs.
- TX – female SMA-type connector. It is the output of the transmitter. It is ground referred, 50 Ohm of RF impedance. Don’t activate the transmitter without a proper load (50 Ohm) at this connector.
- GPS Antenna – female SMA-type connector (optional). A 5Vcc @ max 100mA is superimposed into this connector to supply an external amplified GPS antenna. See the antenna details in the related paragraph.
- I/O interface - 25 pin D-SUB. This connector holds a 12Vdc power supply, the balanced audio interfaces, alarm I/O and some signals useful to interface **KAIROS** with external devices. For further information about the use of these I/O see the related paragraph.
- Expansion connector - 6 pins. This connector holds the signals for GPS interfacing and for 1+1 assembly realizations. For further information about the use of these I/O see the related paragraph.
- Power supply – 2 pins. A 13,2Vdc @5A max should be applied to this connector. The polarity is indicated in the panel.

Finally don’t forget to connect a ground cable to the GND Ø5MA nut to avoid lightning and rescue problems.

3.3.1 RX inputs specifications

KAIROS has got two RX inputs, one named “main” and the other named “diversity”. The contemporary use of both receivers gives excellent performances over fading events. For further information, see the “ENB33 - Soft diversity reception” document.

Both inputs have the following characteristics (typical):

Nominal impedance	50 Ohm
Operating maximum input	-10 dBm
Maximum input without permanent damages	+10 dBm
Received signal band	0..5000 Hz
Blocking level (>1MHz far from RX frequency)	-32 dBm
RSSI measurement range	-130 to -60 dBm
Synthesis step	50 Hz
Connector type	SMA

In duplex applications an external duplexer filter is requested. Using standard European duplex spacing, this filter must attenuate at least 75dB between TX and RX to avoid noise and TX/RX instability during transitions. For lower duplex spacing or when an external power amplifier is used, increase the attenuation to assure the maximum levels indicated in the **KAIROS** manual.

When **KAIROS** operates in simplex/half duplex mode, it is needed to mount the internal TX/RX RF switch as indicated in the following figure. Note that this switch can’t be enabled/installed outside Factory. This feature must be requested directly at order. In this case the TX connector assumes the role of Antenna connector and the RX main is internally switched to the antenna when the TX isn’t active. The RX diversity in such condition can be used regularly as diversity channel:

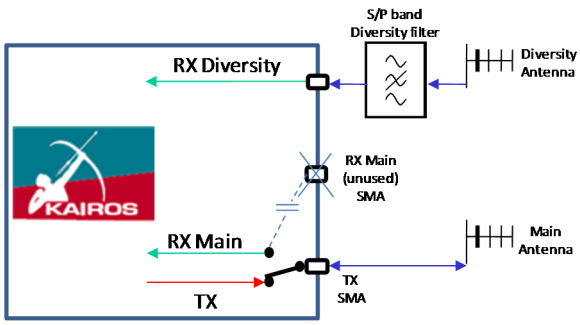

The internal isolation between the Diversity channel and the TX is around 80dB. This allow special realization like a duplex/simplex station:

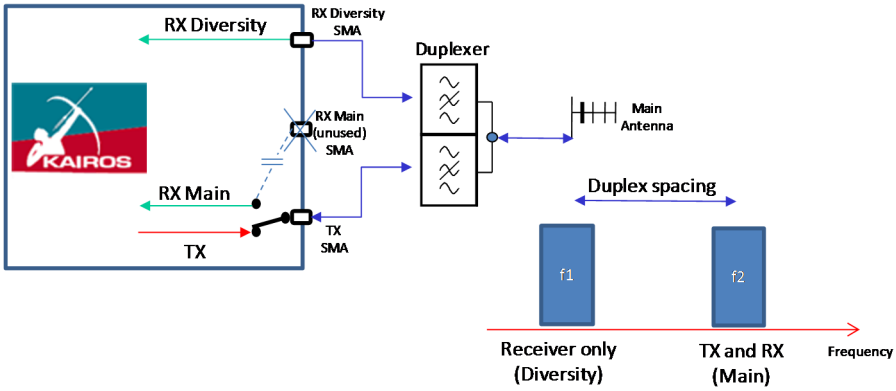

This realization allow to operate like a normal duplex station on f1=f_rx and f2=f_tx, and also in simplex/direct mode at f2. The soft diversity feature, obviously, in this special application is lost. More details can be asked to Factory.

3.3.2 TX output specifications

Direct and reflected output powers are measured by a directional coupler. Power control circuit acts in a closed loop and keeps constant the total power at MOSFET drain. If reflected power or mosfet temperature exceeds protection threshold, regulation circuit will lower output power up to safe levels for transmitter.

Even though the TX implements many internal protections, it is recommended to connect a 50 Ohm load to the TX port before to transmit.

An impedance mismatch at this port may produce unwanted intermodulation products or instability. So it is recommended to verify accurately the branching system tuning before to place in service the equipment.

Play attention: a ports reversal between TX and RX or transmitting in a channel outside the branching tuning, may destroy the RX and damage the TX!

Connector type	SMA
Nominal impedance	50 Ohm
Output power at the connector	1/5/10/15/20/25 W
RF final transistor protection to high temperature	85°C +/- 5°C progressively reducing the RF power
Maximum power dissipation	50W
Modulation bandwidth	0 .. 5000 Hz
Synthesis step	50 Hz
Transmitting duty cycle	Continued 100%
ROS protection	Min.10' in short circuit as well as in open circuit
Frequency stability (without GPS)	0.5 p.p.m.
Max reverse input signal	-20dBm to avoid intermodulation products +20dBm no damage

Power amplifier works in C class and ensures a very high efficiency, lowering the needed power from supply system and lowering the thermal dissipation inside the cabinet. When used at full power and high duty cycle rate, the temperature of the equipment can increase some tens of °C over the ambient temperature. Inside **KAIROS** a thermal sensor is hosted and it is directly connected to the internal microcontroller which enables the command for air forced cooling fan of the cabinet if the temperature rises over 85°C. For heavy duty applications it is recommended to assure appropriate ventilation and to protect users to accidentally touch the equipment when hot.

The current flowing into final amplifier transistor is continuously monitored by microcontroller to verify the correct functioning and to reveal an eventual efficiency degradation.

KAIROS is equipped with an harmonic filter to lower spurious emissions under required levels by existing regulations.

In some applications, for example in multi carriers assembly or in sites with many transmitters, it is recommended to use isolators/circulators to reduce possible intermodulation problems. Note that an isolator assures only a limited isolation bandwidth: it can't isolate a VHF TX from a UHF one! In similar cases diplexers or cavity filters should be used.

Unless the TX has got a built-in protection to a load mismatching, it is strongly recommended to achieve at the TX output connector a VSWR (referenced to 50 Ohm) between 1 to 1.3.

3.3.3 GPS antenna

KAIROS may be (optionally) equipped with an embedded receiver for GPS service, with high precision Pulse Per Second (PPS) output function in order to synchronize the station. Only an external active antenna is required.

The specifications of the external GPS antenna are:

Connector (RF + remote power supply)	SMA
Impedance	50 Ohm
Sensitivity Tracking	up to -159 dBm
Antenna gain	From 20 to 45 dB, depending on cable length, to obtain a total gain between 12 dB and 26 dB (assumes a *3 dBic* patch antenna). A typical value of 25 dB is best in most cases.
Frequency band	GPS L1 1575.42 +/- 10 MHz
Maximum Noise Figure	< 2.5 dB including pre-selector
DC Voltage	5Vcc @ max 100mA superimposed into the SMA RF connector
Out of Band Rejection	-60 dB @ +/- 50 MHz off center frequency
Lightening Protection	90 V, 20 kA, 8/20 -S
Suggested model	GPS-TMG-SP-40N from PCTEL Broadband Technology

The GPS quality and the effective antenna efficiency can be checked connecting to the equipment through the setup tool:

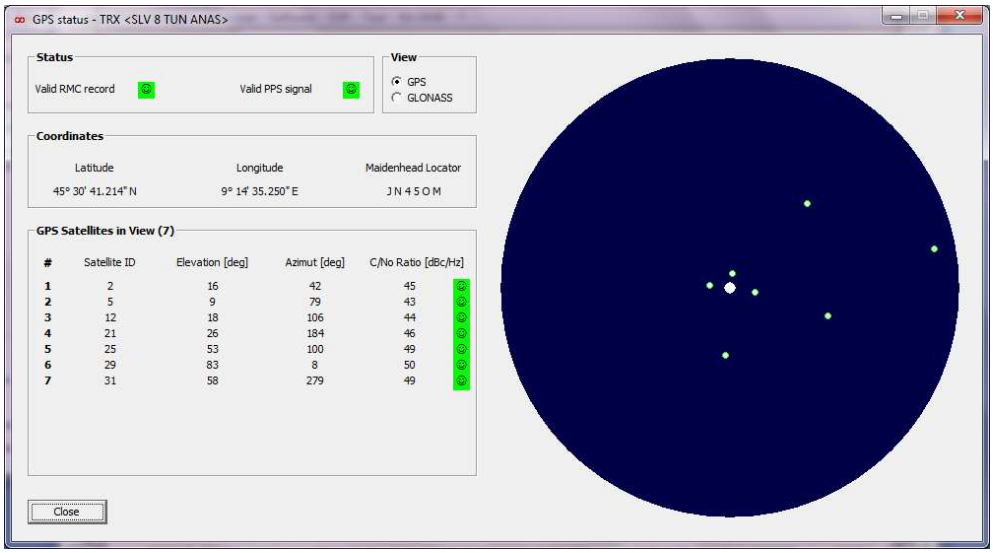

The PPS acquire time is around 1 minute with good GPS signals (the frontal led “RX1” flashes red until the PPS is ready). Once the PPS is acquired (the frontal led “RX1” flashes orange), another minute is request to synchronize in time and frequency the equipment (than the frontal led “RX1” flashes green synchronously with the arriving PPS).

KAIROS has the ability to automatic switch the synch source selecting the best available. The synch priority is settable using the synch mask of the setup tool:

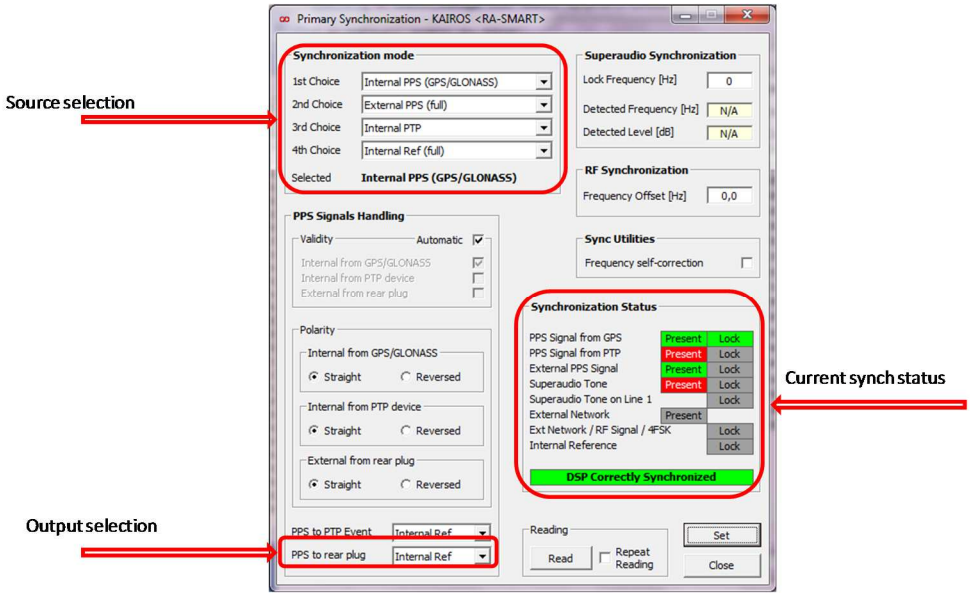

In multi equipment assembly like a multicarrier trunking application, it is possible to use only 1 GPS receiver shearing the PPS signals to the other equipments via the 6pin connector placed in the back of the equipment as shown in the following paragraphs.

3.3.3.1 In site GPS sharing

A special technique is implemented to allow also the use contemporary 2 or more GPS receivers for redundancy. The follow figure explain how to share the PPS:

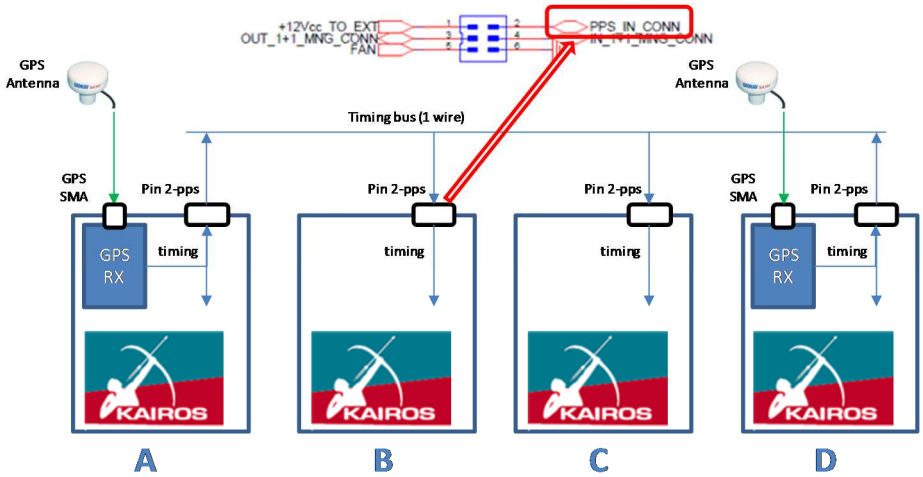

GPS/PPS sharing example

In the example above, 4 **KAIROS** are assembled in the same cabinet. Two GPS antennas are used realizing a 1+1 redundancy in the synchronization source. The timing signal, sent out from both **KAIROS** equipped with the GPS receiver, is used from all the other ones. A special protocol on the 1-wire timing bus allows automatic 1+1 redundancy management.

Since the timing bus (pin2-PPS and pin6-GND) carries a very high precision signal, this cable must be as short as possible and placed away from high power RF antennas. Strong RF signals applies near this cable may corrupts the synchronization integrity.

Since the frontal led "RX1" flashes green synchronously with the PPS signal, this led should flash in the same instant on all the equipments connected together. This immediately gives a feedback about the right connection in the rack.

This configuration requires the following setup in the equipments:

KAIROS "A" and "D":

1st choice	Internal PPS (GPS/GLONASS)
2nd choice	External PPS (full)
3rd choice	Internal PTP (if this protocol is supported by the IP network)
4th choice	Internal ref (full)
PPS to rear plug	Internal ref

KAIROS "B" and "C":

1st choice	External PPS (full)
2nd choice	Internal PTP (if this protocol is supported by the IP network)
3rd choice	Internal ref (full)

4th choice	Internal ref (full)
PPS to rear plug	Insulated

3.3.3.2 GPS sharing in RF linked stations

The main synchronization source in a RF linked simulcast network should be the GPS. In case of GPS failure, the link transceiver is able to recover a time and frequency reference from the DMR signaling coming from the Master station. This reference isn't as precise as the GPS one but it is enough accurate to assure simulcast operation with small degradations in the overlap area.

KAIROS has the ability to automatic switch the synch source selecting the best available. The GPS sharing configuration is identical of the previous figure "GPS/PPS sharing example" where:

	Slave	Master
A	Link transceiver	Link transceiver
B	Broadcast simulcast transceiver	Broadcast simulcast transceiver
C	-	Additional link receivers
D	*Broadcast simulcast transceiver*	*Broadcast simulcast transceiver*

The Broadcast transceiver can be equipped of the GPS receiver in case it is needed a redundancy in the GPS signal (position "B" of the previous table).

Since the frontal led "RX1" flashes green synchronously with the PPS signal, this led should flash in the same instant on all the equipments connected together. This immediately gives a feedback about the right connection in the rack.

This configuration requires the following setup in the equipments:

KAIROS "A":

	Slave	Master
1st choice	Internal PPS (GPS/GLONASS)	Internal PPS (GPS/GLONASS)
2nd choice	External PPS (full)	External PPS (full)
3rd choice	RF link (DMR)	Internal ref (full)
4th choice	Internal ref (full)	Internal ref (full)
PPS to rear plug	Internal ref	Internal ref

KAIROS "B" and "C":

	Slave	Master
1st choice	External PPS (full)	External PPS (full)
2nd choice	Internal ref (full)	Internal ref (full)
3rd choice	Internal ref (full)	Internal ref (full)
4th choice	Internal ref (full)	Internal ref (full)

PPS to rear plug	Insulated	Insulated

KAIROS "D":

	Slave	Master
1st choice	Internal PPS (GPS/GLONASS)	Internal PPS (GPS/GLONASS)
2nd choice	External PPS (full)	External PPS (full)
3rd choice	Internal ref (full)	Internal ref (full)
4th choice	Internal ref (full)	Internal ref (full)
PPS to rear plug	Internal ref	Internal ref

3.3.4 Power supply

The equipment requires a 13.2Vdc nominal power supply with negative to ground. **KAIROS** switches off when a polarity inversion or an out of range Vdc values are detected to its power supply input.

An internal circuit protects the equipment during fast voltage transients (e.g.: in mobile application) and during accidental short circuit. It allows also a "soft start" limiting the in-rush current during the power-on phase.

KAIROS implements also a non-restoring protection (internal fuse) to save the equipment from heavy transients due to lightening. This protection acts absorbing the excess energy incoming from the power supply cable. Note that, after a lightening event, this protection may short the power supply input. Therefore it is recommended to insert a 10A fuse in the power supply cable near the power supply source (e.g.: a battery) to avoid dangerous damage due to lightening event or to accidental short circuits along power supply cables.

Internal power supply is not isolated. **KAIROS** must be supplied by an isolated power supply (from mains) with a minimum isolation equal to the one of an IEC 61558-2-6 compliant safety transformer or equivalent.

The power supply input has the following characteristics:

Input Voltage	10.8 – 15.6 Vdc, neg. ground, Nominal 13.2V
Max ripple	30 mVpp
Polarity reversal protection	up to -70 V
Power supply protections	Electronic protection with automatic restore for overvoltage and undervoltage events
Short-circuit protection	Electronic protection with automatic restore
Power supply connector	2 pole model Phoenix Contact
Power consumption @160MHz 13.2Vdc – typical values for both DMR timeslot used	Power off : 1mA
	GPS Receiver (without external antenna) : 30mA
	LINUX & LAN (no TRX active): 150mA

	LINUX & LAN + RX main on : 260mA
	LINUX & LAN + RX main + RX Diversity on : 310mA
	LINUX & LAN + RX main + RX Diversity + TX @1W : 1A
	LINUX & LAN + RX main + RX Diversity + TX @5W : 1.8A
	LINUX & LAN + RX main + RX Diversity + TX @10W : 2.5A
	LINUX & LAN + RX main + RX Diversity + TX @25W : 4.0A

The DMR TIER 2 standard doesn't require a continuous transmission from the repeater. Thus it's easy to calculate the battery's autonomy as the following example:

Considering a simple **KAIROS** repeater operating at 10W for the 25% of time, the mean power requirement is: I_mean=2,5*25% + 0,310*70% = 625 + 230 = 855mA
In case of a main power supply failure, a small 65Ah battery pack gives more than 3 days of full operation.

3.3.5 I/O ports

KAIROS provides some I/O ports fitted into the 25 pin D-SUB connector and the 6 pins connector placed in the back. Some of these I/O are specialized (e.g.: PTT_out or ALRM_out) but can be re-defined for special applications.

I/O contacts are not isolated from ground, they are referred to ground and pre-polarized by +3.3V. Due to this configuration, for safety reason, they can be connected to very low voltage external circuits only.

Here following it is descripted the standard applications of these auxiliary pins.

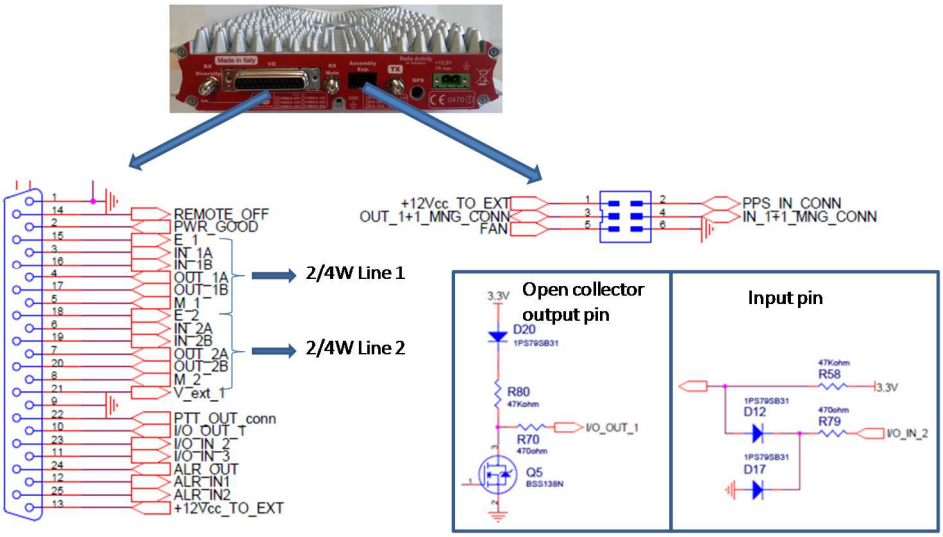

3.3.5.1 Digital I/O

The I/O output pins (PWR_GOOD, M_1, M_2, PTT_OUT_conn, I/O_OUT_1, ALR_OUT, FAN, OUT_1+1_MNG_CONN) are open collector type able to switch up to 20mA/40Vdc. A 470 Ohm resistor limits the maximum current and a 47K resistor refers the output to the internal 3.3V.

The I/O input pins (REMOTE_OFF, E_1, E_2, I/O_IN_2, I/O_IN_3, ALR_IN1, ALR_IN2, PPS_IN_CONN) are internally pull-upped to the 3.3V. A pair of diodes protect the input from voltage below zero. This input switch on closing it to GND.

The function of such pins are:

REMOTE_OFF : [IN] it is equivalent to push the on/off button in the front of the equipment. When **KAIROS** is in on condition, closing this pin to GND for at least 3 seconds produces a switch off condition. When in off condition, closing this pin to GND for at least 250 milliseconds produce a switch on. See the Power on/off button description for further details using this pin.

PWR_GOOD : [OUT] it is closed to GND when the equipment is regularly switched on

E_1, E_2 : [IN] closing them to GND advise the equipment that a valid audio signal is incoming from the Line (like a PTT signal)

M_1, M_2 : [OUT] they are closed to GND when a valid audio signal is sent to the Line (like a SQUELCH advise)

I/O_IN_2, I/O_IN_3 : [IN] general purpose inputs; they can be used in special applications that need to acquire external status like: opening cabinet detection, opening site door, main power supply presence (with external switch)

I/O_OUT_1 : [OUT] general purpose output; it can be used in special applications that need to set an external device/relays

ALR_IN1, ALR_IN2 : [IN] alarm input; closing them to GND produces an alarm advise to the Supervisor Centre. Each alarm can be configured via the setup tool; it is possible to define a DMR TXT message or a SNMP trap for the 0 to 1 transition and for the 1 to 0. Typical application is the open site/cabinet event.

ALR_OUT : [OUT] it is open from GND when the equipment detects an alarm condition. Power off is an alarm condition.

FAN : [OUT] it is closed to GND when the temperature of the internal RF power amplifier rises above the threshold (typ 65°C). It can be used to switch on cooling fans in a cabinet.

PTT_OUT_conn : [OUT] it is closed to GND when the transmitter goes on air. It is possible to insert a pre-time to allow the right switching on time to an external RF power amplifier.

PPS_IN_CONN : [IN/OUT] this pin supports an external PPS signal or can share the internal PPS (from GPS receiver or from the PTP or from other sourced synch). As described previously, a bus connection between different co-located **KAIROS** realizes a multiple GPS reception with automatic backup. This pin can also be

configured to accept an external synchronous clock or an external pulse per second signal. Contact Factory for further details.

IN/OUT_1+1_MNG_CONN : [IN/OUT] these pins support a simple protocol to allow two **KAIROS** to functioning as 1+1 (main and spare) equipment.

V_ext_1 : [IN analog] not isolated inputs for voltage sensing (10KOhm / 0..24V referred to ground); the value of this voltage can be seen via the remote control tool.

+12Vcc_TO_EXT : [OUT aux supply] this pin provides 13.2V, limited at 400mA, to supply a general purpose external device

3.3.5.2 Audio I/O

KAIROS provides two 2/4 wires + E&M balanced interface for external audio devices like consoles or phone lines. These audio ports carry analog or DMR communications (in this case the *AMBE codec* option is requested).

The inputs are IN_1A/IN_1B for the Audio Line 1 and IN_2A/IN_2B for the Audio Line 2 (Z_in = 20KOhm differential / 10KOhm single ended). The outputs are OUT_1A/ OUT_1B for the Audio Line 1 and OUT_2A/ OUT_2B for the Audio Line 2. These two outputs have different impedance:

- Audio Line 1 Z_out = 600 Ohm differential / 300 Ohm single ended.
- Audio Line 2 Z_out = 150 Ohm differential / 75 Ohm single ended.

These IN/OUT ports are balanced and ground referred (**NOT FLOAT!** don't apply to these pins more than 20Vdc). For long line use, it is recommended to insert an external 1:1 transformer in order to isolate the port from static voltage difference that can be arise between the line ends.

They can be used as balanced (suggested method) or as single ended using only one of the IN/OUT pin. The nominal level of the audio signal in/out is -10dBm and can be regulated via setup tool between -20 and 0 dBm (-14 to -6dBm in single ended).

These Audio ports, in conjunction with the E_1, E_2, M_1, M_2 I/O signals described before, realize a double 4Wire+E&M interface.

In analog communications the standard settings of these ports are:

- Audio Line 1 is the audio port for Console; it is a PM (phase modulated = the incoming audio is emphasized) audio port
- Audio Line 2 is the audio port for External modem (e.g.: paging interface); this port is a FM (frequency modulated = the incoming audio is "flat") audio port

In digital communication, if the AMBE option board is installed, these ports have the following roles:

- Audio Line 1: this port is connected to the DMR timeslot 1.

- Audio Line 2: this port is connected to the DMR timeslot 2; it is needed the dual AMBE option

Note that the audio port can be configured in many different modes. For example the Audio Line 1 can be used to synchronize two base stations through a 2 wire long line.

The audio line settings (levels, filters, PM/FM in-out, …) are modifiable with the setup tool, using the "LINE setup" mask.

3.4 Option boards

KAIROS has got two internal connectors for placing option boards. The main option boards are:

- *GPS receiver*: embedded receiver for GPS/GLONASS service, with high precision Pulse Per Second (PPS) output function in order to synchronize the station. Only an external active antenna is required. This option is required for simulcast and special operations. Place it in "OPTBOARD B" position.
- *AMBE codec*: two DSP, one per timeslot, perform the cross-coding of linear audio (mu-law coded) to a DMR audio and vice versa. This option is required for SIP/RTP-IP and local audio applications. This option board can be ordered for 1 or for 2 audio. Place it in "OPTBOARD B" position.
- *USB port*: it allow to connect to **KAIROS** standard USB devices like Flash Keys and the remote control modem. Place it in "OPTBOARD A" position.
- *RS232 port*: it allow to connect to **KAIROS** standard RS232 serial devices like external data logger. Place it in "OPTBOARD A" position.

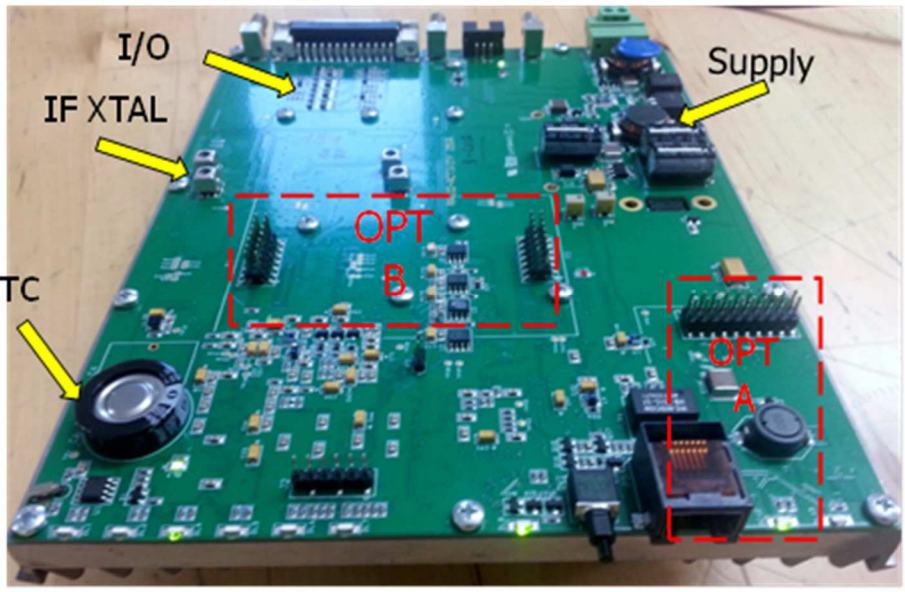

The option boards are automatically detected and recognized at the equipment power on.

4 Installation and maintenance

4.1 Improper use

It is recommended to install the equipments in closed cabinet, to allow only authorized people to access to them, in order to avoid handling or improper use of equipments and to avoid accidental contact with hot surfaces.

4.2 Thermal dissipation

The repeater may be installed in any location suitable for electronic communications equipment, provided that the environmental conditions do not exceed the equipment specifications for temperature and humidity. Humidity conditions should not exceed 95% relative humidity at 50 °C (122 °F).

The temperature, measured in close proximity to the equipment, should not exceed -30 °C (-22 °F) to +60 °C (+140 °F). Therefore, if the equipment is mounted in a cabinet, the temperature within the cabinet should be maintained within this range.

When planning the installation, observe the following ventilation guidelines:

- Outlet cabinet containing the equipments should be designed to ensure a good internal air flux for heating dissipation. A free slot of at least 1TU is recommended between two adjacent equipments.
- If several equipments are installed in a single cabinet, ensure adequate cooling/ventilation to each equipment. The cabinets should be equipped with ventilation slots or openings in the front (for air entry) and back or side panels (for air to exit). The cabinet must have a least 15 cm (6 inches) of open space between the air vents and any wall or other objects.
- In case RF transmitter is set for its maximum power, it is active with a duty-cycle near to 100% and ambient temperature could be above 40°C, a larger respect area must be considered around the rack and an air forced cooling system should be eventually designed (“FAN” contact of the equipment can be used to switch on and off an external cooling system). The transmitter is protected against over-temperature: if the RF mosfet temperature arises over 85°C, the microprocessor will automatically decrease the generated RF power in order to make the amplifier work in safety conditions. The nominal RF power will be restored as soon as the mosfet temperature will decrease below 60°C.

4.3 Power supply system

Internal power supply voltage is nominally set to 13.2V dc from battery, with negative pole connected to ground, and it is protected against polarity inversion, over-voltage, under-voltage, short-circuits.

It is recommended to use power supply sources with low impedance output stage to make the hot swap controller of PSU properly work. For example, if the power supply line is very long a capacitor should be added in parallel in order to reduce the resulting output impedance.

The power supply input has a built-in RF filter that reduce the in⇔out noise. A ferrite bead should be inserted in the power supply cable for very low noise applications or for cable length that exceeds 3 meters.

Note: use cable with adequate section and don't insert inductive devices because they could produce extra-voltage that activate internal electronic protections giving on/off instability.

Power supply cable dimensions must be calculated for a maximum current absorption of 5A @13.2V DC, in order to avoid significant voltage drop, especially after fast transient. They must be protected by a fuse or a short circuit protection system which should be placed as near as possible to each power supply source (AC/DC and battery).

It is also recommended to connect a good ground reference to the rack, to its metal components and to **KAIROS** by using the screw on the rear side of the equipment.

4.4 Antenna

Antenna discharger are recommended to prevent damages due to eventual atmospheric discharges. These devices should be placed on antenna connection cable, just before equipment installation shelter, and they must be connected to an good ground reference.

Attention must be paid also to connect the eventual diversity receiver to the radiant system: the input of this receiver is directly connected to a SMA connector on the back side of the rack, without any filter. The corresponding antenna must be placed far enough from the transmitting antenna in order to avoid receiver desensitization and to get the correct isolation. To avoid any problem, it is recommended to insert a notch or a pass-band cavity to protect the receiver.

If an external branching is connected to the equipment, it must be designed to ensure minimum reflected power at the TX port (VSWR referenced to 50 Ohm less than 1.3) and the needed isolations between transmitter and receivers. See the branching paragraph in the engineering specification appendix.

4.4.1 Maximum permitted antenna gain for mobile usage

Please note that there is an ERP limit in both SRSP-500 specifications by IC and in FCC Part 90 I, equal to 30 Watts (that is 44.8dBm) ERP, for mobile equipment. As Kairos can generate a maximum RF power of 25W (44dBm), the margin between maximum radiated ERP power and transmitted power is 0.8dB (corresponding to 3dBi). The consequence is that for mobile usage of Kairos, the maximum permitted antenna gain (by IC and FCC) is 3dBi.

4.4.2 Maximum permitted antenna gain for fixed usage

Please note that there is an ERP limit in both SRSP-500 specifications by IC and in FCC Part 90 I, equal to 125 Watts (that is 51dBm) ERP, for fixed equipment. As Kairos can generate a maximum RF power of 25W (44dBm), the margin between maximum radiated ERP power and transmitted power is 7dB (corresponding to 9dBi). The consequence is that for fixed usage of Kairos, the maximum permitted antenna gain (by IC and FCC) is 9dBi.

4.5 AF interface

These IN/OUT ports are balanced and ground referred (**NOT FLOAT!** don't apply to these pins more than 20Vdc). For long line use, it is recommended to insert an external 1:1 transformer in order to isolate the port from static voltage difference that can be arise between the line ends.

A 2/4W telephone line can be connected to the equipment only using an external circuit with high isolation and with discharges to prevent damages due to eventual atmospheric discharges on the line.

4.6 Manual settings

No manual settings are required for **KAIROS** repeaters.

4.7 Self-test process

During self-test process internal parameters of modulator and demodulators are tuned by generating a signal through the synthesizer of the transmitter, by automatically connecting its output to the input of the receiver and by analyzing the received signal. If a strong signal is received by the external antenna during self-calibration, it is possible that the process ends with errors (a corresponding "warning" alarm will be displayed on both frontal leds and monitor of PC for remote control). In this case the DSP will load from flash memory the previously saved parameters without any problem for the transceiver.

To obtain better results from self-test process, it is recommended to set the calibration frequency as near as possible to the transmitter frequency; if there is a range of allowed frequencies for transmission, it is recommended to set the centre of this range as the calibration frequency.

4.8 PPS signal

For applications in simulcast networks where the source of synchronization is the PPS signal by GPS, if this signal is missing, the radio coverage of the areas which are reached by several repeaters with the same field strength, is not ensured. Attention must be paid in choosing and placing the GPS antenna.

The GPS quality and the effective antenna efficiency can be checked connecting to the equipment through the setup tool.

4.9 On site check list

Once the equipment is placed in the transmission site it is a good practice to measure some parameters to be sure that the site is ready and for future reference.

The main measures should be:

- Power supply voltage; it should be 13,2Vdc measured at the **KAIROS** input. The internal monitor, accessible via the setup tool, should indicate around 13,2V +/- 300mV in standby; this standby value should not decrease for more than -600mV in TX @10W and -800mV in TX @25W (values valid for

VHF model). Be sure that, at the nominal RF power, the power supply be at least 12Vdc. Remember that noisy power supply may produce unwanted disturbs both in TX and in RX.

- TX power to the antenna; keeping in account the branching loss, it should be within +/-1 dB (+/-2W @10W) respect to the nominal power set.

- Antenna and branching system; verify the reflected power at the TX output and at the branching output to the antenna. Unless the TX has got a built-in protection to a load mismatching, it is strongly recommended to achieve at the TX output connector a VSWR (referenced to 50 Ohm) between 1 to 1.3. In presence of higher value of VSWR, the system performance will be degraded. In this case a variety of symptoms might appear, like:

  1. The reflected power might change varying the length of cable between transmitter and the branching system.

  2. The transmitter might generate spurious radiations.

  3. The transmitter might increase its floor noise; this can produce de-sensitivity on the receiver path.

  4. The transmitter output power might become erratic, either too high or too low as measured on a wattmeter.

  In case of a poor branching system, the use of a ferrite isolator at the output of the transmitter should solve the reflected power problem.

- RX sensitivity; since **KAIROS** is a digital transceiver, the sensitivity should be measured in digital. Anyway, considering that the digital demodulation is only a SW algorithm, it is enough to measure the sensitivity in analog. The sensitivity should be measured on both channels, Main and Diversity, with the branching filters. The S/N should be better than 20dB with a RF field of -110dBm @12.5KHz of channelization.

- RX de-sensitivity; this measure verify the RF pollution that influences the antenna. Connect the RX input to the antenna inserting a directional coupler. The sensitivity measured with the antenna and substituting it with a dummy load should differ for few dB (typical value: 2-6 dB @160MHz, 1-3dB @450MHz). If the measured value is not satisfactory, you can try to insert a band pass cavity filter.

- RX de-sensitivity when the TX is on; this measure verify the correct isolation of the TX/RX filter system. Connect the antenna input to a duplex test set analyzer. The sensitivity with the TX on respect when off, should differ for less than 3 dB (this value may vary with the TX/RX band separation).). If the measured value is not satisfactory, the TX/RX isolation of the branching filter should be increased; the problem may be also in the noise of the power supply when the equipment is in TX.

- Verify the IP network functionality (if the equipment is a part of a network); if the Master station is present, a **KAIROS** slave should register itself to the master within 1 minute. The led “NETWORK” in the frontal panel should blink green. Verify all the signal path: a signal received locally must arrive to

the Master (see its voter mask), must be selected in the master and must be transmitted locally. Be sure that the signal re-transmitted is effectively the signal coming from the Master and not a local copy.

- At the end remember to save on your PC all configuration parameters of the base station; these parameters can be very useful to clone a substituting unit in case of fail.

4.10 IP discover

When **KAIROS** is placed in field or coming back from a site, maybe a problem to connect to it if the IP address is unknown. A simple way to discover the IP is switching on **KAIROS** with the following procedure.

1. Switch off the equipment
2. At equipment switched off, press the on/off button for at least 4 sec (all Radio Led will be orange), until the Radio Led start to flash orange slowly
3. Release the on/off button => the Radio Led start to flash green fast
4. Press again the on/off button within 4 seconds => the equipment goes in "IP discover status"
5. **KAIROS** performs all the setup procedure but its IP becomes: **172.33.16.140/16**; during this status the Radio Led flash orange every 2 seconds to advise that the equipment is in a maintenance status
6. Connect the setup tool to 172.33.16.140/16 address to see/change the IP currently in use in the equipment
7. At the end of the procedure switch off the equipment pressing the on/off button for at least 2 sec as usual

At the next power on, the equipment will assume the last IP saved.

4.11 Preventive Maintenance

KAIROS does not require a scheduled preventive maintenance program; however, periodic visual inspection and cleaning is recommended. Check that the external surfaces of the radio are clean, and that all external controls and switches are functional. It is not recommended to inspect the interior electronic circuitry.

5 Parameters configuration and Remote Control

Working parameter of the station are completely programmable through a SW package and a PC connection. The visible (and programmable) parameters set is very wide and extends from radio channel setting to tuning voltage measure of each local oscillator. The software is called **KAIROS_Manager** for single base-stations or **DMR_NetControl** for network systems.

Remote diagnostic of radio stations from PC can be performed through the Ethernet interface of the station. This interface is absolutely standard and very diffused, so relatively simple to be remoted. Radio Activity stations can be equipped with an external GPRS modem which will provide remote access to the station, if the installation site is covered by this service and if the Mobile Provider allows the machine to machine connection. Each operation can be remotely performed, exactly the same as in local connection, including FW down-loading, configuration Down-loading and up-loading, station check, parameters changing.

Communication and supervision unit can spontaneously transmit diagnostic messages if defined "self-alarming" events happen. This is useful to automatically check the stations.

Here following an example of remote control forms:

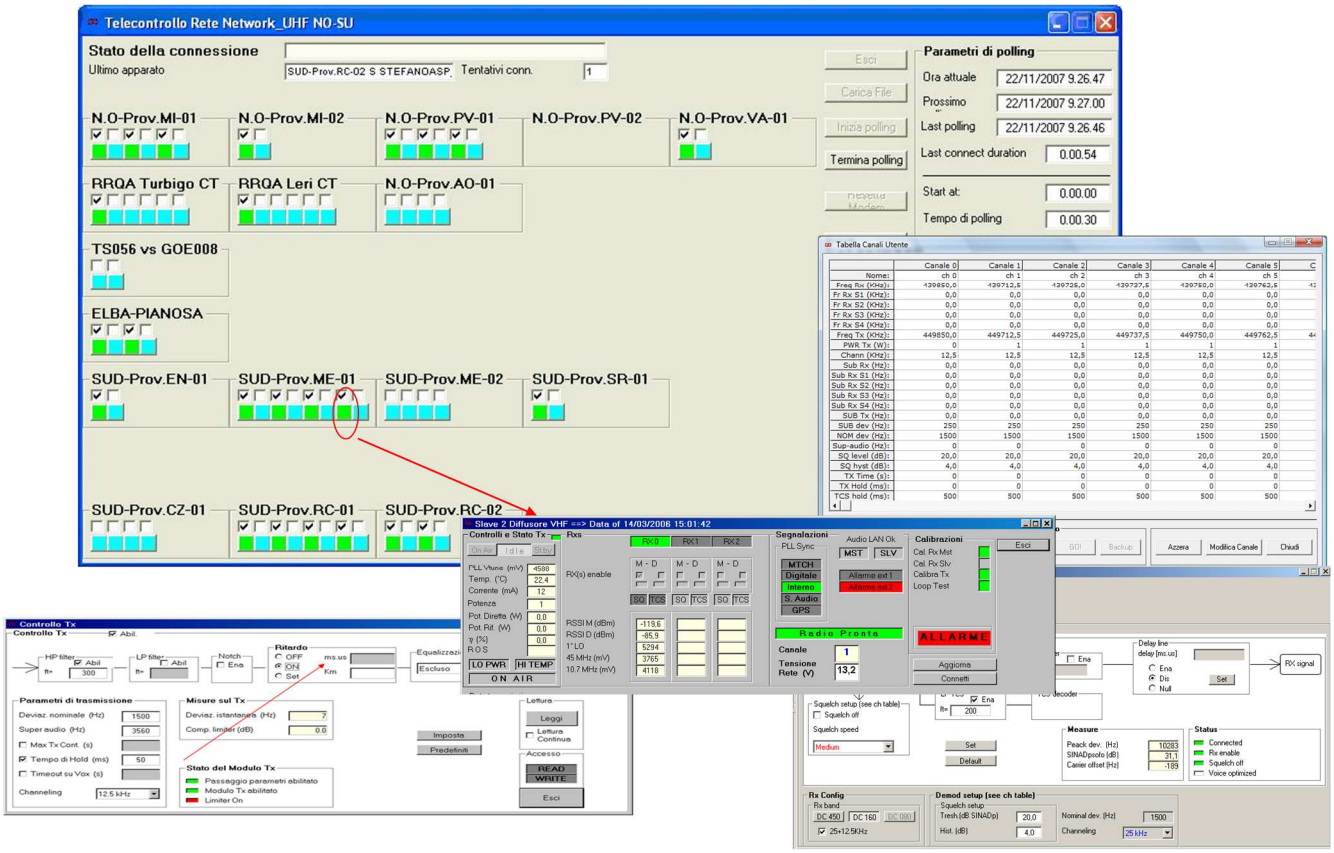

For further details about remote control software, refer to proper documentation (SW user manuals).

5.1 SIP/RTP Gateway

KAIROS can run an optional "DMR Gateway" agent to interface Analog and DMR radio systems to several external networks (the *AMBE codec* option board is requested). It allows radio users to easily communicate and interoperate with:

- External telephone applications like conventional PSTN equipments (external interface needed) and VoIP systems (SIP PABX, SIP Hardphones, Softphones, Open Source SIP platforms).
- Dispatching systems and control room applications like analog *4-wire + E&M* consoles, RTP based consoles, SIP based dispatching systems for control room applications, to connect a Base Station (or a radio network) to a local operator desk.
- Other users under different radio networks/repeater (Wide Area Mobility).

The DMR Gateway Agent translates Voice (full duplex audio streams from/to DMR coded audio to *G.711 μ-law* or *a-law*) and Data streams, along with the associated signaling (for example *SIP Requests*⇔DMR or *DTMF*⇔DMR) to provide the interconnection between these communication systems.

The DMR Gateway Agent runs into the **KAIROS** engine without the need of an external PC. This Agent is compatible with the DTI/DMR Gateway module of the **RA-XXX** family of DMR Base Station (blue series) and can be used in the same system.

These Agent manages one or two DSP processors for audio encoding/decoding (vocoders). A lot of applications may be available by using the extremely compact coded bandwidth and the powerful built-in functionalities. The applications are targeted to the DMR radio communication Dispatching Room.

This audio can be easily managed using standard audio program and application on a PC. Radio Activity will provide the protocol descriptions to allow his partners to develop their own applications.

See the SIP/RTP Gateway document for more details.

6 Engineering specifications

6.1 KAIROS vs RA-XXX comparison

The main differences between the RA-XXX and the **KAIROS** families are:

	KAIROS	**RA-XXX**
Mechanic	Single module	Multi module assembly
Weight	1,3 Kg	6 Kg
Operative System	LINUX	LINUX
Internal Memory (RAM/FLASH)	128Mbyte/64Mbyte	32Mbyte/32Mbyte
Diversity RX	Always present	Option
Power supply	13,2Vdc (11 to 15V)	12Vdc; 24 – 48 Vdc as option
RX power consumption	<5W	<8W
TX Power	25W (15W at 900MHz band)	25W
Simulcast	Yes (as option)	Yes (as option)
Channelization	25/20/12,5/6,25 KHz	12,5 KHz; 25/20 KHz as option
Bands	66-88; 136-174; 350-410; 400-470; 450-520; 860-927 MHZ	68-88; 146-174; 400-470 MHZ
Dual mode DMR/Analog	Yes (as option)	Yes
DMR TIER 3	Yes (as option)	Yes (as option)
Operation	FDMA duplex / half duplex / Direct mode (2TS)/TDMA duplex	FDMA duplex / half duplex (as base station)
Vehicular/mobile repeater	Yes	No
Built in audio lines	2 (Timeslot 1 and 2 DMR)	1
User I/O	4 not insulated	4 insulated
Internal GPS Receiver	Option	Option
Internal GSM for remote Control	No	Option
SIP/RTP Gateway	Internal Option or external DTI module	external DTI module needed
1+1 (Main/Spare) operation	Yes (as option)	Yes (as option)
RS232 Serial port	Yes (as option)	Yes (included in the I/O module)
USB Port	Yes (as option)	No
Design year	2014	2007

6.2 Radio frequency

Radio Transceiver model KA080, KA160, KA350, KA450, KA500, KA900, typical values.

6.2.1 Transmitter

Output power at the connector	1/5/10/15/20/25 W
Connector	SMA
RF final transistor protection to high temperature	85°C +/- 5°C progressively reducing the RF power
Available modulation	FM, PM, GFSK, 4FSK, 2DFSK
Modulation bandwidth	0 .. 5000 Hz
Synthesis step	50 Hz
Transmitting duty cycle	Continued 100%
ROS protection	Min.10' in short circuit as well as in open circuit
Adjacent channel noise	-75 dBc @25KHz / -65 dBc @12.5KHz
FM distortion	< 1.5 %
Noise	-56 dBp @25KHz / -47 dBp @12.5KHz
Frequency stability (without GPS)	0.5 p.p.m. (without digital correction)
Max reverse input signal	-20dBm to avoid intermodulation products +20dBm no damage
Emission Designator (ITU)	4FSK Digital Modulation (DMR) 12.5 KHz Data Only: 7K60FXD 12.5 kHz Data and Voice: 7K60FXE FM Modulation 12.5 kHz: 11K0F3E (voice); 11K0FXD (data) 25 kHz: 16K0F3E (voice); 16K0FXD (data) 20 kHz: 14K0F3E (voice); 14K0FXD (data)

6.2.2 Receiver

Maximum sensitivity	-116 dBm @20 dBp SINAD -118dBm @5% BER without diversity -121dBm @5% BER with diversity
Operating maximum input	-10 dBm
Maximum input without permanent damages	+10 dBm
Reception mode	Vector I & Q
Received signal band	0..5000 Hz
Synthesis step	50 Hz
Co-channel protection	8 dB @25 KHz / 12 dB @12.5KHz

Adjacent channel selectivity	73 dB @25 KHz / 63 dB @12.5 KHz
Blocking protection	80 dB
Intermodulation protection	75 dB
Intercept 3° order IP3in	+15 dBm
Distortion	<2 % @1KHz
Noise	-53 dBp @25 KHz / -47 dBp @12.5 KHz
Frequency stability	0.5 p.p.m. (without digital correction)

6.3 IP interfacing

6.3.1 LAN protocols

Protocols for voice packets	Proprietary between base stations or Audio Gateway (RA-TI-XXX): UDP/IP (ipv4), unicast (from Slave or RA-TI-XXX to master) and selectable from multicast/unicast/broadcast (from master to Slave or RA-TI-XXX), with DSCP set to "**EF**" (*Telephony* service class), according to RFC 4594 Between the Audio Gateway and SIP/Dispatching applications: RTP (Real Time Protocol) according to RFC 3550
Protocols for BS "internal" network control	UDP/IP (ipv4), unicast and multicast, with DSCP set to "**CS6**" (*Network Control* service class), according to RFC 4594
Protocols for remote control, setup and surveillance	UDP/IP and TCP/IP (ipv4) unicast and broadcast with DSCP set to "**AF13**" (*High-Throughput Data* service class), according to RFC 4594
PTP Precision Time Protocol over IP	It delivers the highest level of precision clock synchronization for real time industrial connectivity based on the IEEE 1588 standard
Audio format between Master and Salves or RA-TI-XX	Analog: 64 kb/s – 8 bit x 8 KHz selectable linear or mu-law coded DMR: AMBE II+TM (Advanced Multi-Band Excitation)
Audio frame block net payload	Analog: 60 ms – 480 bytes/samples DMR selectable single/double timeslot: 60 ms – 27 bytes each timeslot
Audio format between RA-TI-XX and PC/SIP application	RTP 64 kb/s – 8 bit x 8 KHz selectable A or mu-law coded
Messaging format between RA-TI-XX and PC/SIP application	variable length RTP for text messaging according to RFC 4103

6.3.2 Ports and connectors

UTP LAN Port	Ethernet 10BT/100TX (auto MDI/MDI-X) on an RJ45 socket
Optical LAN Port (option)	Ethernet 100FX on SC-SC socket (not yet available)

Serial control Port	RS232 V.24 asynchronous 600 ÷ 115200 bps (optional)
USB control Port	(optional)

6.3.3 LAN requirements

Jitter (deviation of averaged packet time delay)	The Base Station is able to compensate Jitter delay up to 200 ms. The total delay averaged + jitter must not exceeds 400ms (each way)
Maximum delay	The Base Station is able to compensate round trip delay less then 900ms (jitters included)
Packet loss	< 0.1 %
Minimum bandwidth (network signaling and remote control polling inclusive)	SLAVE or RA-TI-XX: 70 kb/s in analog to/from Master 24 kb/s in DMR to/from Master (both timeslots)
	MASTER to serve **N** SLAVES or RA-TI-XX (both timeslots): Using **multicast** (**preferred method**) or broadcast: 70 kb/s in analog to Slaves, 70 kb/s x **N** from Slaves 24 kb/s in DMR to Slaves, 24 kb/s x **N** from Slaves Using unicast: 70 kb/s x **N** in analog to Slaves, 70 kb/s x **N** from Slaves 24 kb/s x **N** in DMR to Slaves, 24 kb/s x **N** from Slaves

6.3.4 Codec VoIP

Uncoded audio source	64 kbps – 8bitx8KHz
Net bit-rate (1CH)	2450 bps
FEC Coded bit-rate (1CH)	3600 bps
Audio frame block	20ms
Coder algorithm	AMBE II+TM (Advanced Multi-Band Excitation)
DMR compatibility	Motorola (Mototrbo series), Hytera, Sepura

6.3.5 SNMP protocol

Version compatibility	2.0
Maximum number of managed server ports	8
Traps description	On MIB file included in the standard SW package

6.4 GPS/GLONASS antennas

6.4.1 GPS/GLONASS antenna requirements

Connector (RF + remote power supply)	SMA
Impedance	50 Ohm
Sensitivity Tracking	up to -159 dBm
Antenna gain	From 20 to 45 dB, depending on cable length, to obtain a total gain between 12 dB and 26 dB (assumes a *3 dBic* patch antenna). A typical value of 25 dB is best in most cases.
Frequency band	GPS L1 1575.42 +/- 10 MHz
Maximum Noise Figure	< 2.5 dB including pre-selector
DC Voltage	5Vcc @ max 100mA superimposed into the SMA RF connector
Out of Band Rejection	-60 dB @ +/- 50 MHz off center frequency
Lightening Protection	90 V, 20 kA, 8/20 -S
Suggested model	GPS-TMG-SP-40N from PCTEL Broadband Technology

Note: It is necessary only 1 antenna per site independently from the number of base stations. The pps signal received from one base station can be shared to the other ones in the same cabinet via the 6-pins bus on the back of **KAIROS**.

6.5 Frequency bands

Model	**Frequency band**
KA-900	UHF – HH => 865-941 MHz
KA-500	UHF – H => 450-527 MHz
KA-450	UHF – M => 400-470 MHz
KA-350	UHF – L => 350-410 MHz
KA-160	VHF – H => 136-174 MHz
KA-080	VHF – L => 66-88 MHz
KA-040*	VHF – LL => 30-40 MHz

* please, ask to Factory the availability

6.6 Branching requirements

6.6.1 TX to antenna duplex isolation requirements @10W TX RF power

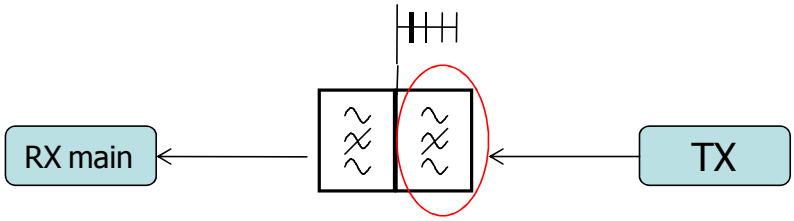

Band	+/-40MHz	+/-9MHz	+/-4.5MHz	+/-3MHz	+/-1.5MHz	+/-0.8MHz
UHF – HH	75dB					
UHF – H/L	75dB	76dB				
VHF – H	75dB	75dB	76dB	78dB	81dB	85dB
VHF – L	75dB	75dB	75dB	75dB	78dB	81dB

6.6.2 Suggested RX max input limits on unwanted signals

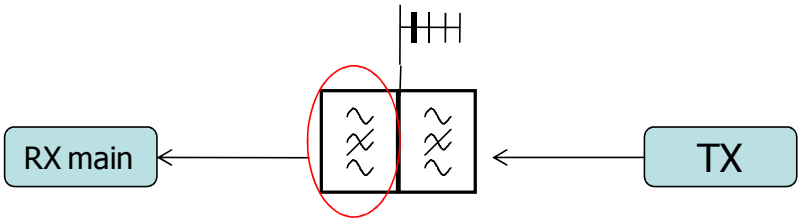

Band	+/-1MHz	+/-500KHz	+/-100KHz	+/-50KHz	+/-25KHz	+/-12.5KHz
UHF – HH	-32dBm	-43dBm	-45dBm	-47dBm	-49dBm	-58dBm
UHF – H/L	-32dBm	-41dBm	-43dBm	-44dBm	-48dBm	-56dBm
VHF – H	-32dBm	-40dBm	-42dBm	-43dBm	-47dBm	-54dBm
VHF – L	-32dBm	-36dBm	-38dBm	-40dBm	-43dBm	-50dBm

6.7 Other specifications

6.7.1 Environmental parameters

Operating Temperature	-30 ÷ +60 °C
Storage Temperature	-40 ÷ +70 °C
Relative Humidity (operating and storage)	Max 80% not condensed

6.7.2 Power supply

Input Voltage	10.8 – 15.6 Vcc, neg. ground, Nominal 13.2V
Max ripple	30 mVpp
Polarity reversal protection	up to -70 V
Power supply protections	Electronic protection with automatic restore for overvoltage and undervoltage events
Short-circuit protection	Electronic protection with automatic restore
Power supply connector	3 pole model Phoenix Contact
Ground connections	A Ø5MA nut on the rear side of the base station The central contact on the power supply connector
Power consumption	TX: 60 W @25W RF RX: 4.5 W (with both RX main and diversity enabled)

6.7.3 Mechanical characteristics

Dimensions (including connectors)	48 x 197x 220 mm
19” Rack mount assembly for up to 2 transceivers	87 (2TU) x 426 x 220 mm
19” Rack mount assembly for up to 6 transceivers	215 (5TU) x 426 x 220 mm
Weight (1 transceiver)	1.350 g

6.7.4 Audio balanced interfaces

Interface type	2x4+E&M balanced lines
Line isolation	25 V / (1500V with external phone line interface)
Used audio bandwidth	300÷3400 Hz
Input/output Impedance	Line1 => 600 Ohm differential / 300 Ohm single ended Line2 => 150 Ohm differential / 75 Ohm single ended
Side tone reflection	< - 20 dB
Output nominal level	-30 .. 0 dBm
Input nominal level	-30 .. 0 dBm
Level adjust	software by 0.1dB step
Ring detect (with external phone line interface)	60..120 Vpp @25Hz
Release tone detection(with external phone line interface)	3 pulses of 425Hz @50% duty 250ms/250ms

7 REGULATIONS COMPLIANCE

KAIROS is compliant with the existing regulations, in particular:

- ***EN 300 086-2***: Technical characteristics and test conditions for radio equipment for analogue speech.
- ***EN 300 113-2***: Technical characteristics and test conditions for non speech radio equipment for the transmission of data.
- ***FCC***: Part 90; subpart I
- ***IC***: RSS119
- ***ETSI TS 102361 (part 1;2;3)***: Electromagnetic compatibility and Radio spectrum Matters (ERM); Digital Mobile Radio (DMR) Systems. The equipment is able to manage OSI stack layers 1–2–3 of the DMR protocol, offering an active interaction with mobile terminals.
- ***EMC*** : EN 301489-1; EN 301489-5
- ***EMF***: EN50385
- ***EMC for bus & train***: EN 50498; EN 50121-3-2; EN 50155
- ***Safety*** : EN 60065 A1

The product is conformed to the Directive 1999-5-CE.

The product is conformed to the Directive 2002/95/CE - RoHs ("ro-has"). It doesn't contain concentrations exceeding the permitted limits for the following substances:

- Lead (Pb)
- Mercury (Hg)
- Cadmium (Cd)
- Hexavalent chromium (Cr (VI))
- Polybrominated biphenyls (PBB)
- Polybrominated diphenyl ethers (PBDEs)

The use of this equipment may be subject to the specific authorization by the national authority responsible for spectrum management, and it should operate under the local government laws.

Please refer to the document "Declaration of conformity KA-xxx.doc" (where "xxx" is the specific model, which is referred to) for signed certification of compliance of the **KAIROS** to normatives.

7.1 Notice for EC users

KAIROS products have been certified by and registered to Notify Body ACB nr. 1588, according to the R&TTE Directive 1999/5/EC.

The following table shows the list of EU Countries where the equipment is intended to be used:

AT	BE	BG	CH	CY	CZ	DE	DK	EE	ES
FI	FR	GB	GR	HU	IE	IS	IT	LT	LU
LV	MT	NL	NO	PL	PT	RO	SE	SI	SK
TR									

7.2 Notice for US users

This device complies with Part 15 of the FCC Rules and with Industry Canada licence-exempt RSS standards.

Operation is subject to the following two conditions:

1. this device may not cause harmful interference, and
2. this device must accept any interference received, including interference that may cause undesired operation.

This equipment has been tested and found to comply with the limits for a Class A digital device, pursuant to Part 15 of the FCC Rules. These limits are designed to provide reasonable protection against harmful interference when the equipment is operated in a commercial environment. This equipment generates, uses, and can radiate radio frequency energy and, if not installed and used in accordance with the instruction manual, may cause harmful interference to radio communications. Operation of this equipment in a residential area is likely to cause harmful interference in which case the user will be required to correct the interference at his own expense.

Changes or modifications made to this equipment not expressly approved by Radio Activity may void the FCC authorization to operate this equipment.

7.3 Notice for Canadian users

Le présent appareil est conforme aux CNR d'Industrie Canada applicables aux appareils radio

exempts de licence. L'exploitation est autorisée aux deux conditions suivantes:

1. l'appareil ne doit pas produire de brouillage, et
2. l'utilisateur de l'appareil doit accepter tout brouillage radioélectrique subi, même si le brouillage est susceptible d'en compromettre le fonctionnement.