Circuit Description

MT7H7*4D10-** is a hearing protector with a programmable 2-way radio (analogue/digital), Bluetooth, level dependent function for ambient listening and input for external signals. It is available with headband, neckband or helmet attachment.

The unit consists of left side(PCBA:K384) and right side(PCBA:K385) that are connected by headband cable.Bluetooth device is COB module:BC8670 adopted CSR8670 platform,and Headset is adopted HongRui C6000 and RDA1846S platform.

➢ Left side(K384)

K384 is power and audio board with left surround microphone,boom microphone and left speaker.Left surround microphone pick up the surrounding voice of left side,and through amplifier,DSP ADAU1761 on right board,and via headband cable to left speaker for monitoring what happens outside when wearing the headset,also you can select the close this function by operating manual.Boom microphone is used as main source when you talk with other units,signal that you talk, is amplified and voice handler by MCU and C6000,as delay,pre-emphasis,baseband modulation before transmitting.Left speaker is used as output component, covering surrounding voice,sidetone and RX audio from the other units.

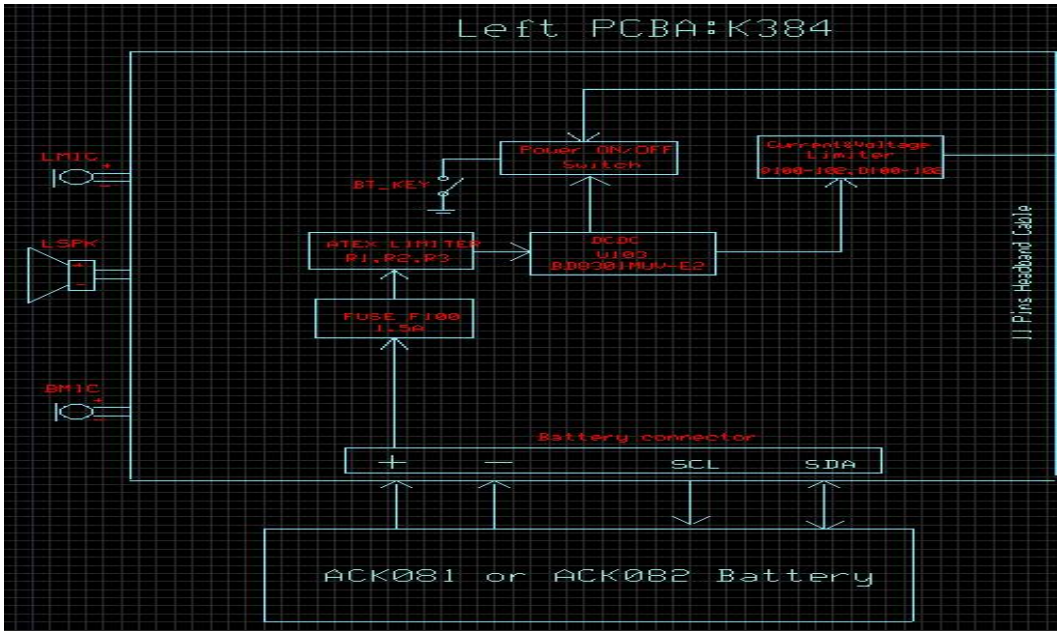

Install battery pack,press“+”power on/off key for 3s,MCU detect the signal,get logic 0 to Q103 power on/off switch transistor base terminal ,Q103(BC807) collector provide high level to U103 DCDC chip(U103BD8301MUV-E2),enable it to covert the dc power level from 3.7V to 3.4V from U103 pin6,then pass through voltage and current limiter(consists of Q100~102,D100~102) to

protect overload.Finally 3.4V DC supply go through headband cable to right board.

Left side audio path is simply,only has the microphone and speaker connector.All the audio signals is from right side through headband cable.

➢ Right side PCBA(K385):

● Headset RF:

1.RF Section

RF Section consists of TX,RX,transceiver,fixed 50 Ohm internal antenna connector and Integrated whip antenna, fixed to headset.As below attached:

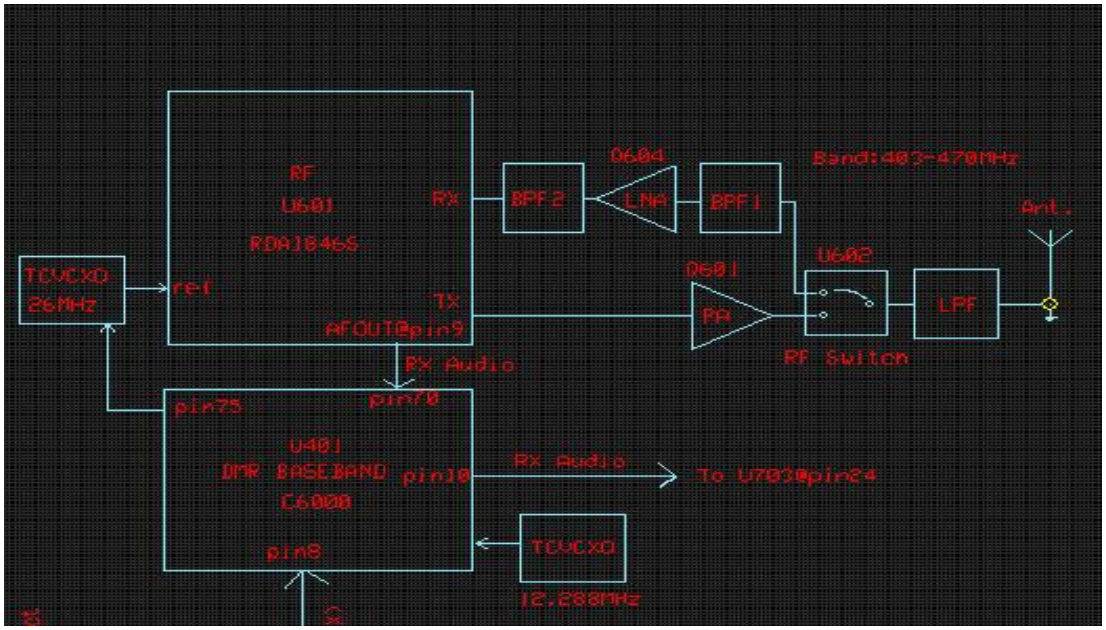

1.1 TX Circuit

1) RF PA circuit
2) Low-pass filter circuit(for suppressing harmonics)
3) Power control circuit

The carrier signal generated from transceiver chip U601(RDA1846S),get RF level about 5.69dBm at U601 pin 18 after internal amplifier driver,then through input match network,external PA Q601(RQA0004LXAQS) and output network to get enough power. LDO(U606),Q601 drain bias and Q601 gate bias controlled by MCU DAC to comprise power control circuit,set low(10mW),mid (20mW)and high power(200mW) to meet customer different country`s standard.The current is about 140mA when the drain of Q601 is 3.25V to get the maximum power:200mW.

(Ta = 25°C)

Item	Symbol	Ratings	Unit
Drain to source voltage	V_{DSS}	16	V
Gate to source voltage	V_{GSS}	±5	V
Drain current	I_D	0.3	A
Channel dissipation	Pch[note]	3	W
Channel temperature	Tch	150	°C
Storage temperature	Tstg	–50 to +150	°C

Note: Value at Tc = 25°C

Electrical Characteristics

(Ta = 25°C)

Item	Symbol	Min.	Typ	Max.	Unit	Test Conditions
Zero gate voltage drain current	I_{DSS}	—	—	2	μA	V_{DS} = 16 V, V_{GS} = 0
Gate to source leak current	I_{GSS}	—	—	±2	μA	V_{GS} = ±5 V, V_{DS} = 0
Gate to source cutoff voltage	$V_{GS(off)}$	0.3	0.6	0.9	V	V_{DS} = 6 V, I_D = 1 mA
Forward Transfer Admittance	|yfs|	—	0.43	—	S	V_{DS} = 6 V, I_D = 0.3 A
Input capacitance	Ciss	—	10	—	pF	V_{GS} = 5 V, V_{DS} = 0, f = 1 MHz
Output capacitance	Coss	—	5	—	pF	V_{DS} = 6 V, V_{GS} = 0, f = 1 MHz
Reverse transfer capacitance	Crss	—	0.4	—	pF	V_{DG} = 6 V, V_{GS} = 0, f = 1 MHz
Output Power	Pout	—	25.1	—	dBm	V_{DS} = 3.7 V, I_{DQ} = 50 mA
		—	0.33	—	W	f = 174 MHz
Power Added Efficiency	PAE	—	65	—	%	Pin = +13 dBm (20 mW)
Output Power	Pout	—	26.6	—	dBm	V_{DS} = 3.7 V, I_{DQ} = 50 mA
		—	0.46	—	W	f = 520 MHz
Power Added Efficiency	PAE	—	71|	—	%	Pin = +13 dBm (20 mW)
Output Power	Pout	—	29.7	—	dBm	V_{DS} = 6 V, I_{DQ} = 50 mA
		—	0.93	—	W	f = 520 MHz
Power Added Efficiency	PAE	—	68	—	%	Pin = +13 dBm (20 mW)

After PA circuit,signal pass through RX/TX switch and LC low pass filter to suppress spurious and harmonic components to emit to the air.

About audio modulated,Audio(analog modulation baseband signal) or 4FSK (DMR baseband signal) inject into TCVCXO to modulate 26MHz reference clock to accomplish FM modulation,then transmit them from RDA1846S.

1.2 RX Circuit

RX path consists of Antenna,LPF,RF Switch,two BPF filters,LNA and transceiver.

1) Front-end Circuit

RF signal on air is picked up from antenna,through LPF rejected outband interference signal,then pass through RF Switch to BPF filter when RF receiver mode.Band pass filter is electrically tunable filter.They also are Q604 matching network,they are low noise amplifier circuit.MCU through DAC chip(U605) to change the output voltage to modify the VC capacitance(D600~D603) to achieve different resonate frequencies with different channels to accomplish broadband matching.RF signal pass through LNA and BPF to get more strong and good quantity signal,then to U601(RDA1846S) for demodulation to send to RDA1846S internal DAC which can directly drive a 32 ohm resistance loading through AC couple to get base band signal.

1.3 Transceiver

MT7H7*4D10-** adopts RDA1846S which is highly integrated single-chip transceiver for headset applications.It totally realizes the translation from RF carrier to voice in RX path(demodulation) and from voice to RF carrier in TX path(modulation).RDA1846S has a powerful digital signal processor,which makes it have optimum voice quality,flexible function options,and robust performance under varying reception conditions.

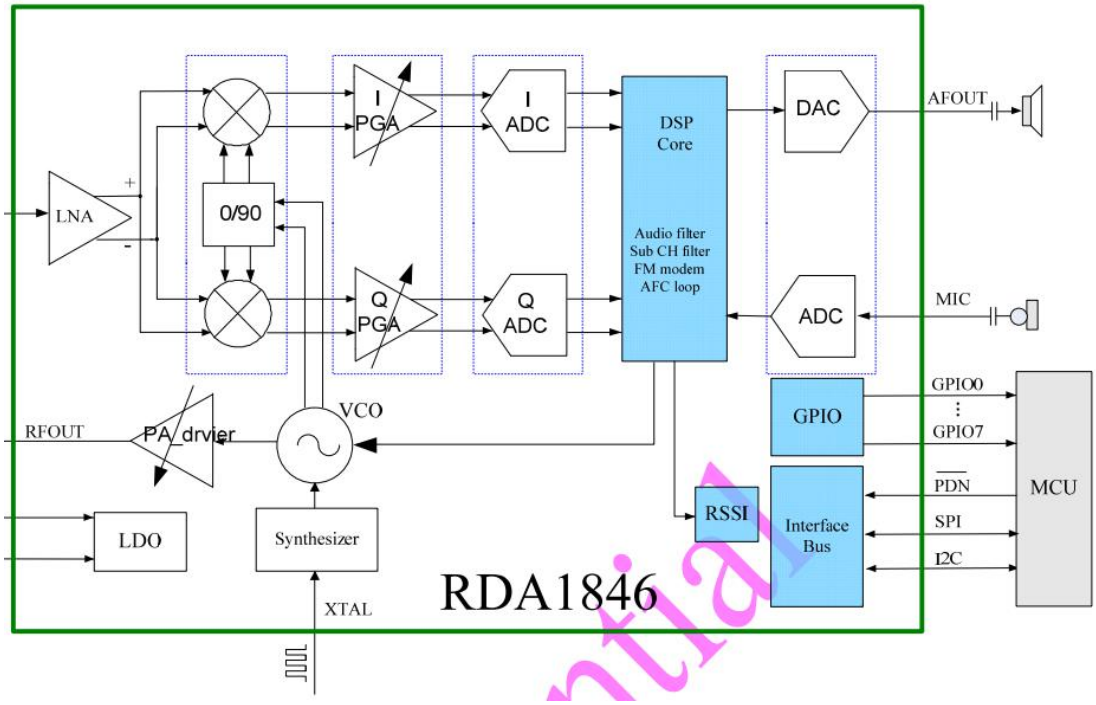

A powerful integrated DSP accomplished both the demodulation an modulation of FM signal.Besides,standard walkie-talkie features such as CTS,CDS,VOX and SQ etc.are provided through the 8 GPIOs of the chip.Especially,by virtue of the state-of-the-art CMOS technology advanced algorithms such as AFC,AGC,RSSI and SNR calculations are realized in the DSP.Flexible RX/TX/SLEEP auto switching function from the DSP further reduces the average power consumption.

26MHz TCVCXO provide RDA1846S clock,through internal programmable synthesizer(RX VCO is 3.4GHz) to provide different frequencies from 400MHz to 500MHz and from 134MHz to 174MHz which cover most of the walkie-talkie frequency bands around the world and the weather broadcast band.

In RX path,adopt IQ-mix direct convert RF signal to base band signal,to avoid image rejection. Programmable gain amplifier(PGA) to meet different condition requirement.Auto PGA can protect the signal too large block the path,or too small signal can not trigger threshold in the following ADC stage.

1.4 Antenna and Antenna connector

MT7H7*4D10-** adopt internal antenna connector(50 ohm),it can be connected with antenna board by coaxial cable.

Antenna is whip antenna for 403~470MHz band,gain is 2.15dBi.

2.Baseband Section

2.1 Audio circuit.

MT7H7*4D10-** audio circuit is complex system,it consists of 11 paths,the block diagram as below:

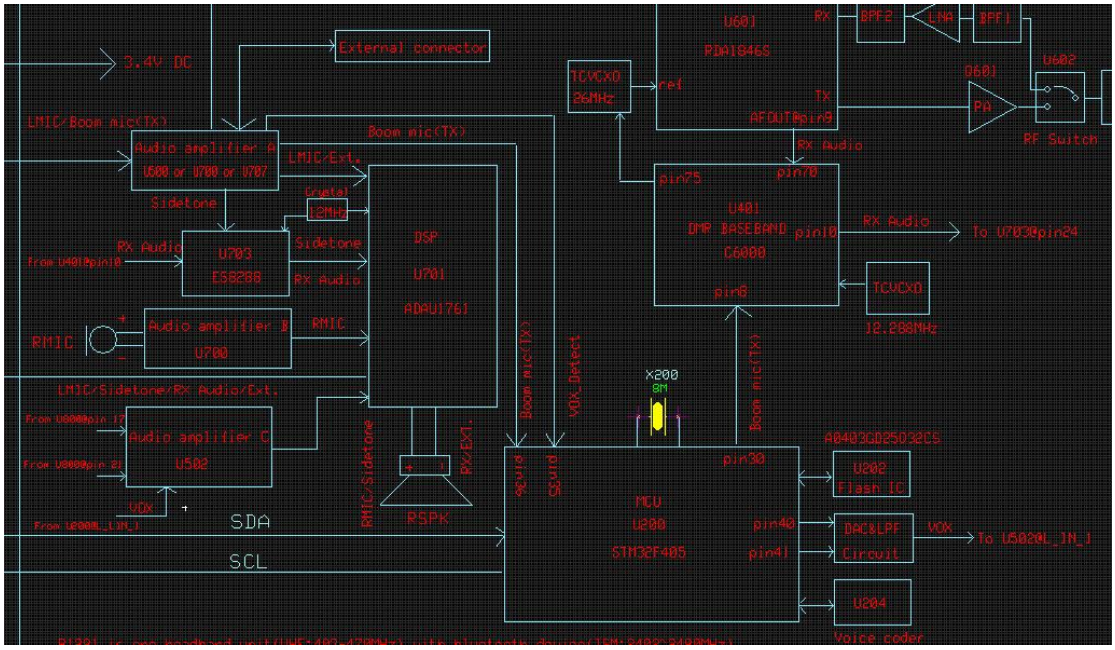

(1)Boom microphone--->RF
(2)Boom microphone--->Sidetone(left and right side speaker output)
(3)Boom microphone---->external interface
(4)Boom microphone---->Bluetooth
(5)Boom microphone--->Vox detect
(6)Left surround microphone--->left side speaker
(7)Right surround microphone--->Right side speaker
(8)External------>Speaker(left and right side speaker output)
(9)Voice tone---->Speaker(left and right side speaker output)
(10)Bluetooth receive path--->Speaker(left and right side speaker output)
(11)Headset receive path--->Speaker(left and right side speaker output)

2.2 Boom microphone audio path

Boom microphone is main component,Boom microphone audio route contains 5 paths as below:
1)Boom microphone--->RF
2)Boom microphone--->Sidetone(left and right side speaker output)
3)Boom microphone---->external interface
4)Boom microphone---->Bluetooth
5)Boom microphone--->VOX detect

Boom microphone on left side picks up the sound,convert it into electrical

signal. Pass through 11pin headband cable and U500(OP amplifier) with different gain selector (circuit block with Q501) ,then divide 5 route to implement different feature.

(1)Boom microphone--->RF and Boom microphone---->Bluetooth
The two paths are route that communicated with other wireless devices.(two-way radio and bluetooth device).
Boom microphone--->Bluetooth:Audio signal pass through U503 and U500,then sent to MCU ADC for sampling / time delay,then inject to baseband U401(C6000) for 4FSK mod-demodulation and for compressor/pre-emphasis/limiter/ then sent to 26MHZ VCTCXO reference clock of PLL to accomplish modulation to carrier.
Boom microphone---->Bluetooth:RF:Audio signal pass through U503,directly inject into BC8670 Bluetooth COB module and GMSK modulation.

(2)Boom microphone--->Sidetone(left and right side speaker output)
This path is for headset.The circuit can feedback a voice to speaker in both of the left side and right side when you talk.

(3)Boom microphone---->external interface/External------>Speaker
You can directly talk to far end through external jack. Also using the external microphone directly talk to headset.
(4)Boom microphone--->VOX detect
Setting VOX different threshold,can trigger auto transmit with different voice levels,do not need press“PTT”key

2.3 Left surround microphone--->left side speaker and Right surround microphone--->Right side speaker
MT7H7*4D10-** has surround microphone on both of left side and right side to guard
surrounding environment.You can set different levels,also can shut off.

2.4 External input---> Left side speaker and Right side speaker
MT7H7*4D10-** provide external jack to talk to external device.

2.5 Voice tone---->Speaker
MT7H7*4D10-** provide voice promt,guide user setting and voice battery status,as battery high/low.

2.6 BT receive--->Speaker(RX) and Boom microphone---->bluetooth(TX)
This two path is for bluetooth TX and RX.User can pair other bluetooth Device to communicate,and play music,etc.

2.7 Headset receive path--->Speaker

Headset receive path recover RF signal with modulation to audio/4FSK.As above RX circuit in RF section.After demodulation from RDA1846S,audio input to the HR C6000.

For analog(FM): signal to C6000 internal filter,de-emphasis,De-compress and DAC.

For 4FSK(DMR):signal to C6000 SPI to MCU to implement 4FSK demodulator,and docoder and DMR tierI/II/III(software decode)as attached photo as below:

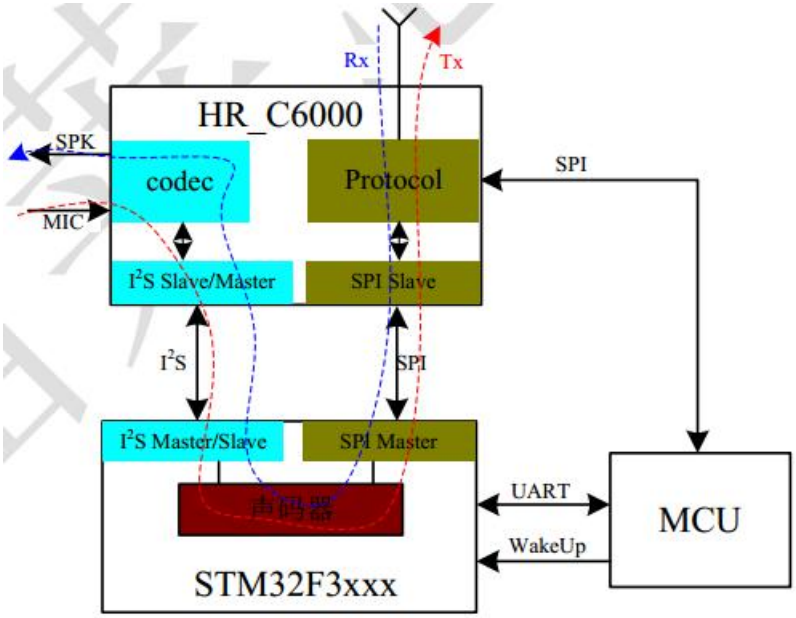

Audio output from C6000 line out pin,then pass ES8288(ADC chip) and ADAU1761 DSP chip,finally to speaker.

● Bluetooth

The Bluetooth module BC8670 is COB(chip on board)soldered on K385.The module adopt CSR8670 with internal RF.

The BlueCore® CSR8670™ BGA consumer audio platform for wired and wireless applications integrates an ultra-low-power DSP and application processor with embedded flash memory, a high-performance stereo codec,a power management subsystem, LED and LCD drivers and capacitive touch sensor inputs in a SOC IC. The dual-core architecture with flash memory enables manufacturers to easily differentiate their products with new features without extending development cycles.

CSR's popular BlueCore5-Multimedia platform is software-portable to the BlueCore CSR8670 BGA, with easy migration of a broad range of solutions from CSR's Extension partners. This migration enables rapid time-to-market deployment of a broad range of consumer electronics products.The enhanced Kalimba DSP co-processor with 80MIPS supports enhanced audio and DSP applications.

1.Diagram

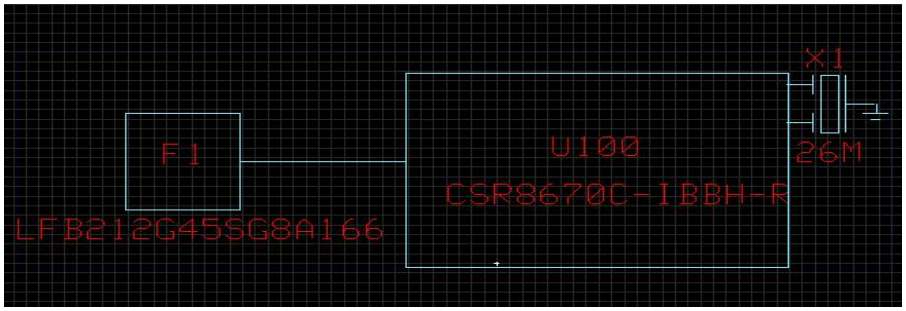

RX and TX path is common routine in external CSR8670.

For RX path,signal is picked up from antenna,inject to SAW filter LFB212G45SG8A166,to reject the out band signal through to CSR8670.CSR8670 has the balanced input signals for the LNA required on receive. No matching components are needed as the receive mode impedance is 50Ω .The receiver features a near-zero IF architecture that enables the channel filters to be integrated onto the die.Sufficient out-of-band blocking specification at the LNA input enables the receiver to operate in close proximity to GSM and W-CDMA cellular phone transmitters without being desensitised. A digital FSK discriminator means that no discriminator tank is needed and its excellent performance in the presence of noise enables CSR8670 BGA to exceed the Bluetooth requirements for co-channel and adjacent channel rejection.For EDR, the demodulator contains an ADC which digitises the IF received signal. This information is then passed to the EDR modem. Attached the parameters of chip as below:

RF Characteristics, VDD = 1.35V	Frequency (GHz)	Notes	Min	Typ	Max	Bluetooth Specification	Unit
Sensitivity at 0.1% BER for all basic rate packet types	2.402	-	-	-87	-83	≤-70	dBm
	2.441	-	-	-90	-86		
	2.48	-	-	-90	-86		
Maximum received signal at 0.1% BER		-	-20	>-10	-	≥-20	dBm
Continuous power required to block Bluetooth reception (for input power of -67dBm with 0.1% BER) measured at the output of the CSR8670 BGA	0.030 - 2.000	-	-10	1	-	-10	dBm
	2.000 - 2.400	-	-27	-7	-	-27	
	2.500 - 3.000	-	-27	-6	-	-27	
	3.000 - 12.75	-	-10	3	-	-10	
C/I co-channel		(1) (2) (3)	-	5	11	≤11	dB
Adjacent channel selectivity C/I	$F = F_0 + 1MHz$	(1) (2) (3)	-	-5	0	≤0	dB
	$F = F_0 - 1MHz$	(1) (2) (3)	-	-3	0	≤0	dB
	$F = F_0 + 2MHz$	(1) (2) (3)	-	-35	-30	≤-30	dB
	$F = F_0 - 2MHz$	(1) (2) (3)	-	-25	-20	≤-20	dB
	$F = F_0 + 3MHz$	(1) (2) (3)	-	-45	-40	≤-40	dB
	$F = F_0 - 5MHz$	(1) (2) (3)	-	-45	-40	≤-40	dB
	$F = F_{Image}$	(1) (2) (3)	-	-20	-9	≤-9	dB
Maximum level of intermodulation interferers		(4)	-39	-23	-	≥-39	dBm
Spurious output level		(5)	-	-155	-	-	dBm/Hz

For TX path,CSR8670 BGA contains an on-chip balun which combines the balanced outputs of the PA on transmit and the transmitter has been optimised to deliver power in a 50Ω load.Output power level is tunable by maximum power level and power table setting in internal register. SAW filter LFB212G45SG8A166 reject the out band harmonic and spurious components.

RF Characteristics, VDD = 1.35V		Notes	Min	Typ	Max	Bluetooth Specification	Unit
Maximum RF transmit power		(1) (2) (3)	6	10	-	-6 to 4	dBm
RF power variation over temperature range with compensation enabled		(4)	-	±0.5	-	-	dB
RF power variation over temperature range with compensation disabled		(4)	-	±1.5	-	-	dB
20dB bandwidth for modulated carrier		-	-	925	1000	≤1000	kHz
ACP	$F = F_0 \pm 2MHz$	(5) (6)	-	-23	-20	≤-20	dBm
	$F = F_0 \pm 3MHz$	(5) (6)	-	-32	-28	≤-40	dBm
	$F = F_0 \pm > 3MHz$	(5) (6)	-	-65	-40	≤-40	dBm
Δf_{1avg} maximum modulation		-	140	165	175	140	kHz
Δf_{2max} minimum modulation		-	115	137	-	≥115	kHz
$\Delta f_{2avg}/\Delta f_{1avg}$		-	0.8	0.9	-	≥0.80	-
ICFT		(7)	-75	15	75	±75	kHz
Drift rate		-	-	7	20	≤20	kHz/ 50µs
Drift (single slot packet)		-	-	15	25	≤25	kHz
Drift (five slot packet)		-	-	15	40	≤40	kHz
2nd harmonic content		(8)	-	-40	-	≤-30	dBm
3rd harmonic content		(8)	-	-55	-	≤-30	dBm

RX and TX path in chip as below:

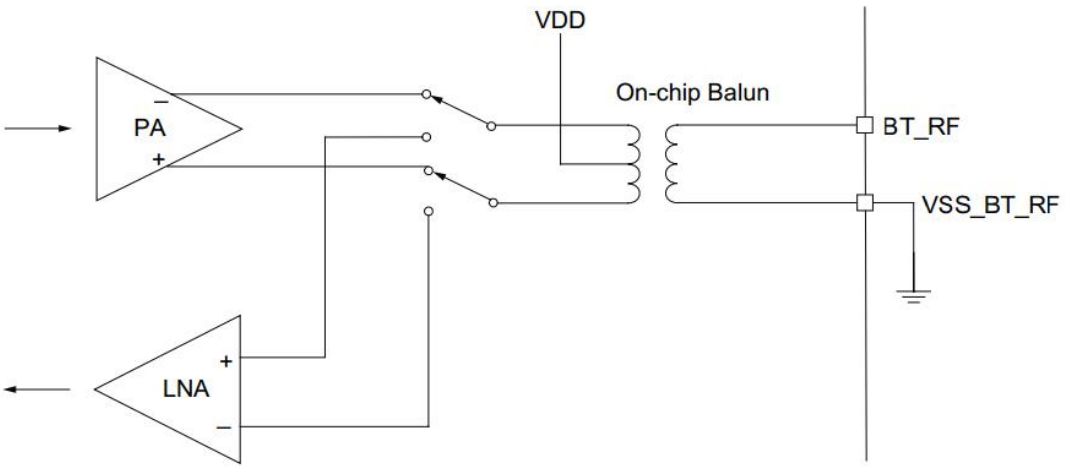

Figure 2.1: Simplified Circuit BT_RF

Technical Parameters

PMR:
Frequency Range:406.1MHz to 470MHz；
RF Output Power: High Power:200mW，Low Power: 10mW；
Modulation Type:
Analog Voice: FM, Digital Data: 4FSK;
Channel Separation: Analog Voice: 12.5kHz，Digital Data: 12.5kHz;

This equipment is capable of supporting a minimum data rate of 4800 bits per second per 6.25kHz of channel bandwidth. DMR interphone's bandwidth is 12.5kHz, and it has a double time slot, one is the speech time slot, one is the data time slot, just language sequence is satisfied with 4800bps/6.25KHz BW .
This equipment meets a spectrum efficiency standard of one voice channel per 6.25 kHz of channel bandwidth

FRS:
Frequency Range: 467.5625MHz~467.7125MHz；
RF Output Power: High Power:200mW，Low Power: 10mW；
Modulation Type:
Analog Voice: FM
Channel Separation: Analog Voice: 12.5kHz;

GMRS:
Frequency Range: 462.55MHz~467.725MHz；
RF Output Power: High Power:200mW，Low Power: 10mW；
Modulation Type:
Analog Voice: FM
Channel Separation: Analog Voice: 12.5kHz;

For mobile and portable transmitters designed frequencies in the 450－470MHz band will be granted only if the mobile/portable equipment is capable of operating on the nationwide public safety interoperability calling channel in the 450－470MHz band.(See § 90.20(c), (d) of this part.)

Bluetooth:
Frequency Range: 2400~2483.5 MHz；
Channel:79/40(BLE) Channels
Modulation Type: GFSK,Pi/4-DQPSK,8DPSK；
Channel Separation: 1M/2MHz
Antenna gain:0dBi