# Preface

Thanks for your favor in our product. This manual provides guidance for you to use the product. To avoid body injury or property loss caused by misoperation, please carefully read the *Safety Information Booklet* before using the product.

This manual is applicable to the following product:

BD51X Digital Portable Radio

# Copyright Information

Hytera is the trademark or registered trademark of Hytera Communications Corporation Limited (the Company) in PRC and/or other countries or areas. The Company retains the ownership of its trademarks and product names. All other trademarks and/or product names that may be used in this manual are properties of their respective owners.

The product described in this manual may include the Company's computer programs stored in memory or other media. Laws in PRC and/or other countries or areas protect the exclusive rights of the Company with respect to its computer programs. The purchase of this product shall not be deemed to grant, either directly or by implication, any rights to the purchaser regarding the Company's computer programs. Any of the Company's computer programs may not be copied, modified, distributed, decompiled, or reverse-engineered in any manner without the prior written consent of the Company.

# Disclaimer

The Company endeavors to achieve the accuracy and completeness of this manual, but no warranty of accuracy or reliability is given. All the specifications and designs are subject to change without notice due to continuous technology development. No part of this manual may be copied, modified, translated, or distributed in any manner without the prior written consent of the Company.

We do not guarantee, for any particular purpose, the accuracy, validity, timeliness, legitimacy or completeness of the Third Party products and contents involved in this manual.

If you have any suggestions or would like to learn more details, please visit our website at: http://www.hytera.com.

# FCC Statement

This equipment has been tested and found to comply with the limits for a Class B digital device, pursuant to part 15 of FCC Rules. These limits are designed to provide reasonable protection against harmful interference in a residential installation. This equipment generates and can radiate radio frequency energy and, if not installed and used in accordance with the instructions, may cause harmful interference to radio communications. However, there is no guarantee that interference will not occur in a particular installation. If this equipment does cause harmful interference to radio or television reception, which can be determined by turning the equipment off and on, the user is encouraged to try to correct.

The interference by one or more of the following measures:

- Reorient or relocate the receiving antenna. Increase the separation between the equipment and receiver.
- Connect the equipment into an outlet on a circuit different from that to which the receiver is connected.

- Consult the dealer or an experienced radio/TV technician for help.

Operation is subject to the following two conditions: 1. This device may not cause harmful interference, and 2. This device must accept any interference received, including interference that may cause undesired operation.

Note: Changes or modifications to this unit not expressly approved by the party responsible for compliance could void the user's authority to operate the equipment.

## Compliance with RF Exposure Standards

Hytera's portable radio complies with the following RF energy exposure standards and guidelines:

- United States Federal Communications Commission, Code of Federal Regulations; 47 CFR § 1.1307, 1.1310 and 2.1093
- American National Standards Institute (ANSI) / Institute of Electrical and Electronic Engineers (IEEE) C95. 1:2005; Canada RSS102 Issue 5 March 2015.
- Institute of Electrical and Electronic Engineers (IEEE) C95.1:2005 Edition

## RF Exposure Compliance and Control Guidelines and Operating Instructions

To control your exposure and ensure compliance with the occupational/controlled environment exposure limits always adhere to the following procedures.

Guidelines:

- Do not remove the RF Exposure Label from the device.
- User awareness instructions should accompany device when transferred to other users.
- Do not use this device if the operational requirements described herein are not met.

Operating Instructions:

- Transmit no more than the rated duty factor of 50% of the time. To transmit (talk), push the Push-To-Talk (PTT) button. To receive calls, release the PTT button. Transmitting 50% of the time, or less, is important because this radio generates measurable RF energy exposure only when transmitting (in terms of measuring for standards compliance).
- Hold the radio in a vertical position in front of face with the microphone (and the other parts of the radio, including the antenna) at least one inch (2.5 cm) away from the nose. Keeping the radio at the proper distance is important because RF exposures decrease with distance from the antenna. Antenna should be kept away from eyes.
- When worn on the body, always place the radio in a Hytera's approved clip, holder, holster, case, or body harness for this product. Using approved body-worn accessories is important

because the use of Hytera's or other manufacturer's non-approved accessories may result in exposure levels, which exceed the FCC's occupational/controlled environment RF exposure limits.

- If you are not using a body-worn accessory and are not using the radio in the intended use position in front of the face, then ensure the antenna and the radio are kept at least 2.5 cm (one inch) from the body when transmitting. Keeping the radio at the proper distance is important because RF exposures decrease with increasing distance from the antenna.
- Use only manufacturer's name approved supplied or replacement antennas, batteries, and accessories. Use of non-manufacturer-name approved antennas, batteries, and accessories may exceed the FCC RF exposure guidelines.
- Contact your local dealer for the optional accessories of the product .

## ISEDC Statement

The device has been tested and compliance with SAR limits, users can obtain Canadian information on RF exposure and compliance

Après examen de ce matériel aux conformité aux limites DAS et/ou aux limites d'intensité de champ RF, les utilisateurs peuvent sur l'exposition aux radiofréquences et la conformité and compliance d'acquérir les informations correspondantes

This device complies with Innovation, Science and Economic Development Canada RSS standard(

Operation is subject to the following two conditions:

(1) this device may not cause interference, and

(2) this device must accept any interference, including interference that may cause undesired operation of the device.

Le présent appareil est conforme aux CNR d'ISEDC applicables auxappareils radio exempts de licence. L'exploitation est autorisée aux deux conditions suivantes: (1) l'appareil ne doit pas produire de brouillage, et (2) l'utilisateur de l'appareil doit accepter tout brouillage radioélectrique subi, même si le brouillage est susceptible d'en compromettre le fonctionnement

## EU Regulatory Conformance

As certified by the qualified laboratory, the product is in compliance with the essential requirements and other relevant provisions of the following directives:

- 1999/5/EC or 2014/53/EU
- 2006/66/EC
- 2011/65/EU
- 2012/19/EU

Please note that the above information is applicable to EU countries only.

# 1. Items in the Package

Please unpack carefully and check if all items listed below are received. If any item is missing or damaged, please contact your dealer.

| Item | Quantity (PCS) | Item | Quantity (PCS) |
|---|---|---|---|
| Radio | 1 | Antenna | 1 |
| Battery | 1 | Belt Clip | 1 |
| Charger | 1 | Strap | 1 |
| Power Adapter | 1 | Documentation Kit | 1 |

**Note**

The frequency band is marked on the label of antenna; if it is unavailable there, see the label on the radio.

# 2. Product Overview

## 2.1 Product Controls

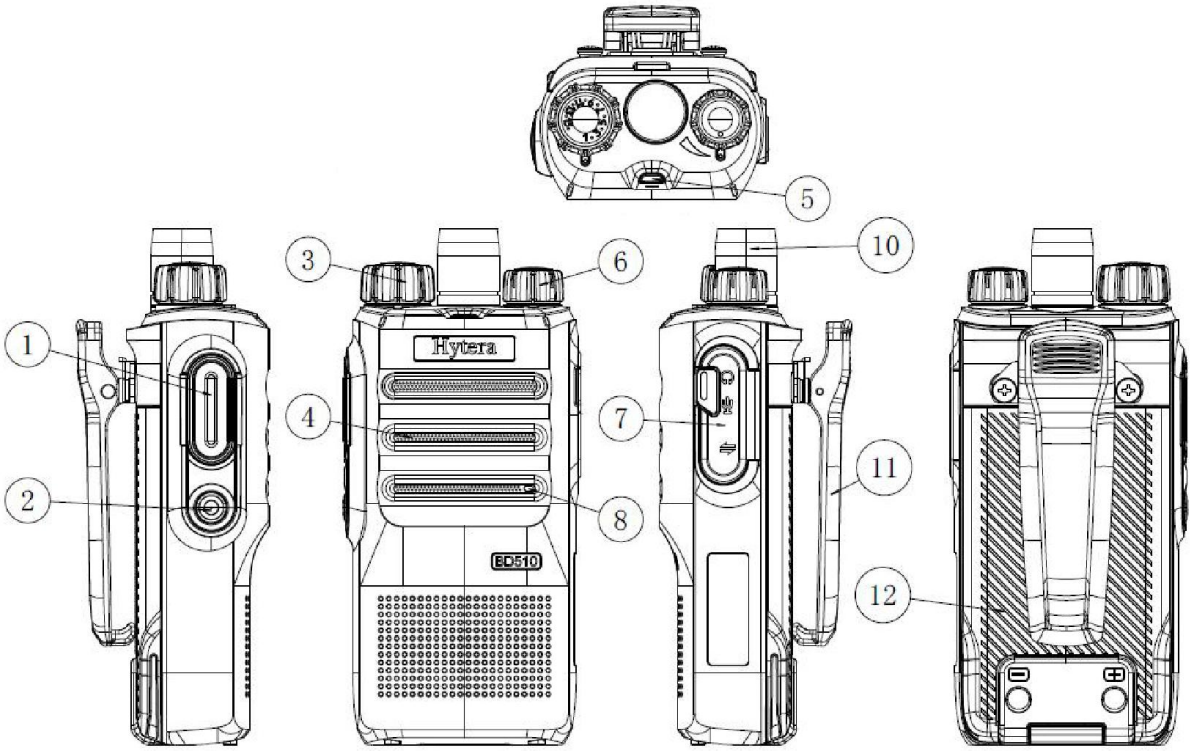


| No | Part Name | No | Part Name |
|---|---|---|---|
| 1 | Push-to-Talk(TTP) | 7 | Accessory Connector |
| 2 | Slde Key(SK) | 8 | Microphone |
| 3 | Channel Selector Knob | 9 | Battery Latch |
| 4 | Speaker | 10 | Antenna |
| 5 | LED | 11 | Belt Cllp |
| 6 | On-off/Volume Control Knob | 12 | Battery |

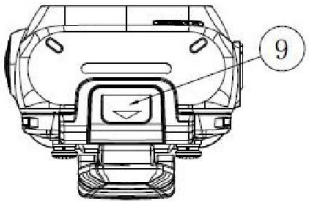


**Note**

For your convenience, you may request your dealer to program the **SK** as the shortcut to a radio feature.

## 2.2 LED Indication

| LED Indicator | Radio Status |
|---|---|
| Flashes green | Being turned on. |
| Glows green | Receiving. |

| | |
|---|---|
| Glows red | Transmitting. |
| Flashes orange slowly | Scanning. |
| Glows orange | Call hang time: No voice is being transmitted or received on the channel during a call. Within such a period, you can hold down the **PTT** key to speak. |

# 3. Before Use

## 3.1 Attaching the Antenna

**Step 1** Place the antenna in its receptacle.

**Step 2** Rotate the antenna clockwise.

**Caution**

Do not hold the radio by its antenna; otherwise, the radio performance may be reduced and the life span of the antenna may be shortened.

## 3.2 Attaching the Battery

**Step 1** Insert the top end of the battery into the top of the battery slot.

**Step 2** Press the bottom end of the battery until the latch snaps into place.

**Note**

To remove the battery, make sure that the radio is turned off, and then slide the battery latch upwards to unlock the battery.

## 3.3 Attaching the Belt Clip

**Step 1** Unfasten the two screws on the back of the radio.

**Step 2** Align the screw holes on the belt clip with those on the back of the radio.

**Step 3** Tighten the screws.

## 3.4 Attaching the Accessories

**Step 1** Open the accessory connector cover.

**Step 2** Plug the accessory into the accessory connector.

**Step 3** Tighten the screw on the accessory plug.

## 3.5 Charging the Battery

**Caution**

Use the charger specified by the Company to charge the battery.

Be sure to charge the battery fully before initial use, since reduction of state of charge (SoC) may lead to low battery alarm. You can charge the standalone battery or the radio with the battery attached. It is

recommended that your radio remain powered off during charging.

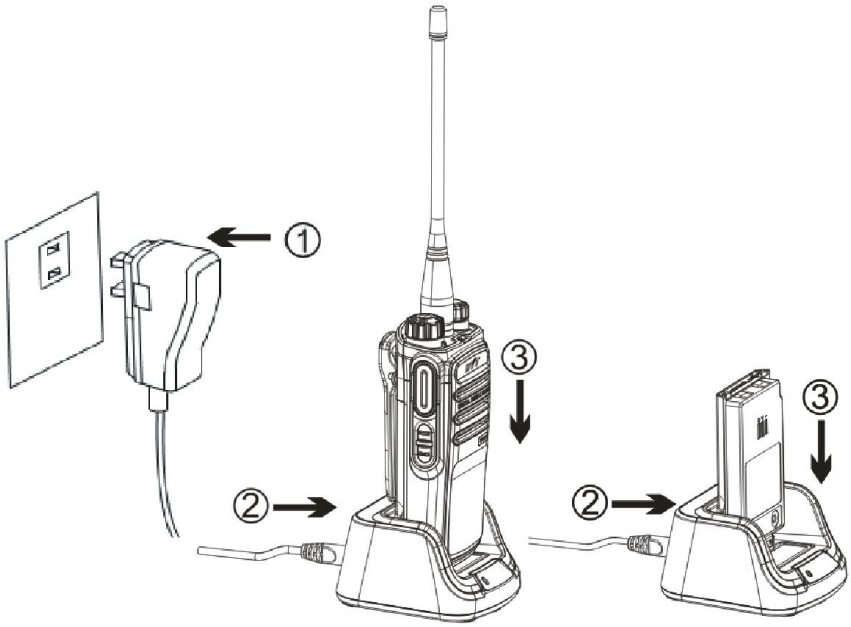


The LED indicator on the charger shows the charging status. For details, see the following table.

| LED Indicator | Charging Status |
|---|---|
| Glows green | The battery is inserted incorrectly or fully charged. |
| Glows red | The battery is charging. |
| Glows orange | The battery is charged to 85% or above. |

## 3.6 Checking the Battery Power

You can check the current battery power by holding down the **Battery Power Indicator** key programmed by your dealer, and release the key to exit. The following table lists battery power indications:

| LED Indicator | Alert Tone | Battery Power |
|---|---|---|
| Glows green | Three beeps | High |
| Glows orange | Two beeps | Medium |
| Glows red | One beep | Low |
| Flashes red | Low battery tone | Under the low battery threshold. Please recharge or replace the battery. |

# 4. Basic Operations

| If you want to… | Do this… |
|---|---|
| Turn on the radio | Rotate the **On-Off/Volume Control** knob clockwise. |
| Turn off the radio | Rotate the **On-Off/Volume Control** knob counterclockwise. |
| Increase/Decrease the volume | Rotate the **On-Off/Volume Control** knob clockwise/counterclockwise after turning on the radio. |
| Select a channel | Rotate the **Channel Selector** knob. |

# 5. Call Services

## 5.1 Call on Digital Channel

On the digital channel, you can initiate or respond to a group call or private call. A group call is a call from an individual user to a group of users. A private call is a call from an individual user to another individual user.

### 5.1.1 Initiating a Call

**Step 1** Select the required channel.

**Step 2** Hold the radio vertically 2.5 to 5 cm from your mouth.

**Step 3** Hold down the **PTT** key and speak when the radio is in standby mode.

### 5.1.2 Receiving and Responding to a Call

When receiving a call, you can listen to it without any operation. You can hold down the **PTT** key to respond within the preset time period.

## 5.2 Call on Analog Channel (Without Signaling)

A call on analog channel is from an individual user to all users on the channel. The operations are the same as the call on digital channel.

# 6. Optional Features

The following features need to be programmed by your dealer. Please contact your dealer for detailed operations.

| Type | Feature | Description |
|---|---|---|
| Radio Feature | Zone | Allows you to select a zone. The radio supports up to 3 zones, with a maximum of 16 channels per zone. |
| | Power Level | Allows you to switch the transmit power level between high and low. |
| | Scan | Allows the radio to scan all channels in the scan list programmed for the current channel. |
| | Emergency Alarm | Allows you to initiate an emergency alarm or call at any time to ask for help in case of emergencies. |
| | Voice Operated Transmit (VOX) | Allows you to enjoy hands-free communication with the dedicated VOX earpiece. |
| | Busy Channel Lockout | Prevents the radio from transmitting on a busy channel. |
| | Time-out Timer (TOT) | Terminates transmission when the preset time period expires. |
| | Battery Save | Allows the radio to automatically enter the battery save mode when detecting no activity or operation within a certain time period. |
| Digital Feature | One Touch Call | Allows you to press one key to call the predefined private or group contact. |
| | All Call | Allows you to initiate a call to all users on the channel. |
| | TDMA Direct Mode | Allows the radio to operate on a channel with two time slots. |
| Analog Feature | Squelch Off | Allows the radio's speaker to always keep unmuted. |
| | Squelch Level | Allows you to adjust the squelch threshold required for the radio to unmute. |
| | Monitor | Allows the radio to monitor activities on the channel. |
| | CTCSS/CDCSS | Allows you to prevent unwanted calls on the same frequency. |

# 7. Troubleshooting

| Phenomena | Analysis | Solution |
|---|---|---|
| The radio cannot be turned on. | The battery may be installed improperly. | Remove and reattach the battery. |
| | The battery power may run out. | Recharge or replace the battery. |
| | The battery may suffer from poor contact caused by dirtied or damaged battery contacts. | Clean the battery contacts or replace the battery. |
| During receiving, the voice is weak, discontinuous or totally inactive. | The battery voltage may be low. | Recharge or replace the battery. |
| | The volume level may be low. | Increase the volume by rotating the **Volume Control** Knob. |
| | The antenna may get loose or may be installed improperly. | Turn off the radio, and remove and reattach the antenna. |
| | The speaker may be blocked. | Clean the surface of the speaker. |
| You cannot communicate with other group members. | The frequency or signaling may be inconsistent with that of other members. | Set your TX/RX frequency and signaling to the same as those of other members. |
| | The channel type (digital or analog) may be set inconsistently. | Make sure all members are on the same digital or analog channel. |
| | You may be too far away from other members. | Move towards other members. |
| Irrelevant voices or noise is heard on the channel. | You may be interrupted by radios using the same frequency. | Change the frequency, or adjust the squelch level. |
| | The radio in analog mode may be set with no signaling. | Set signaling for all radios operating at the same frequency to avoid interference. |

| Phenomena | Analysis | Solution |
| --- | --- | --- |
| The noise is too loud. | You may be too far away from other members. | Move towards other members. |
| | You may locate in an unfavorable position. For example, your communication may be blocked by high buildings or frustrated in the underground areas. | Move to an open and flat area, and restart the radio to try again. |
| | You may suffer from external disturbance (such as electromagnetic interference). | Stay away from equipment that may cause interference. |

If the above solutions cannot fix your problems, or you may have some other queries, please contact us or your local dealer for more technical support.

# 8. Care and Cleaning

To guarantee optimal performance as well as a long service life of the product, please follow the tips below.

## Product Care

- Do not pierce or scrape the product.
- Keep the product far away from substances that can corrode the circuit.
- Do not hold the product by its antenna or earpiece cable.
- Close the accessory connector cover when no accessory is in use.

## Product Cleaning

**Caution**

Turn off the product and remove the battery before cleaning.

- Clean up the dust and fine particles on the product surface and charging piece with a clean and dry lint-free cloth or a brush regularly.
- Use neutral cleanser and a non-woven fabric to clean the keys, knobs and front case after long-time use. Do not use chemical preparations such as stain removers, alcohol, sprays or oil preparations, so as to avoid surface case damage.
- Make sure the product is completely dry before use.

# 9. Optional Accessories

Contact your local dealer for the optional accessories of the product.

**Caution**

Use the accessories specified by the Company only; otherwise, the Company shall not be liable for any loss or damage arising out of use of unauthorized accessories.