Preface

Thank you for purchasing Hytera CHU-P0BA01 DMR Base Station Channel Unit.

As a product built to the DMR standard, CHU-P0BA01 is endowed with ergonomic design, reliable performance and comprehensive digital functions to deliver an advanced communication solution. With CHU-P0BA01, you can make use of digital advantages to top the competition!

To ensure you get maximum benefit from the product, please read this manual carefully before use.

Icon Information

The following icons are available through this manual:

Caution: indicates situations that could cause damage to your unit or bodily injury.

Note: indicates tips that can help you make better use of your unit.

* Indicates functions or parts that are not supported by the current version of the channel unit, but will be available to future versions.

Copyright Information

Hytera and HYT are the trademark or registered trademark of Hytera Communications Co., Ltd in PRC and other countries and/or areas. Hytera retains the ownership of its trademarks and product names. All other trademarks and/or product names that may be used in this manual are properties of their respective owners.

The Hytera product described in this manual may include Hytera computer programs stored in memory or other media. Laws in the PRC and/or other countries or areas preserve for Hytera exclusive rights for Hytera computer programs. The purchase of this product shall not be deemed to grant, either directly or by implication, any rights to the purchaser with respect to Hytera computer programs. Any Hytera computer programs may not be copied, modified, distributed, decompiled, or reverse-engineered in any manner without the prior written consent of Hytera.

Disclaimer

Hytera endeavors to achieve the accuracy and completeness of this manual, but no warranty of accuracy or reliability is given. All the specifications and designs are subject to change without prior notice due to continuous technology development. No part of this manual may be copied, modified, translated, or distributed in any manner without the express written permission of Hytera.

If you have any suggestions or would like to learn more details, please visit us at: http://www.hytera.cn.

Contents

Checking Items in the Package 3
Channel unit Overview 4
Front Panel 4
Rear Panel 5
Internal Parts 6
Installation 6
Installation Overview 7
Before Installation 7
Installation Requirements 8
Installation Steps 10
Electrical Connections 13
Power Supply Connections 13
RF Antenna Connections 14
Post-Installation Checklist 15
Status Indications 16
LED Indicator 16
Basic Operations 17
Turning the Unit On/Off 17
Care and Cleaning 17

Checking Items in the Package

Please unpack carefully and check that all items listed below are received. If any item is missing or damaged, please contact your dealer.

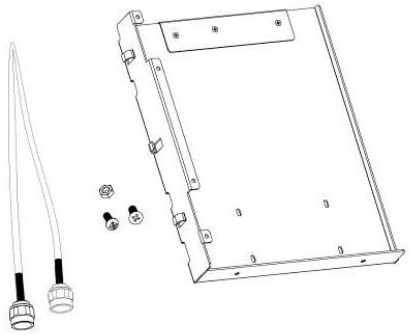

Duplexer Installation Kit

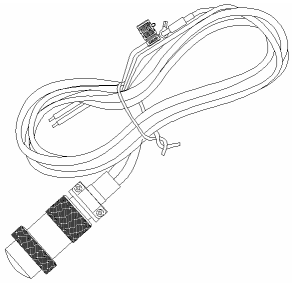

Power Cord

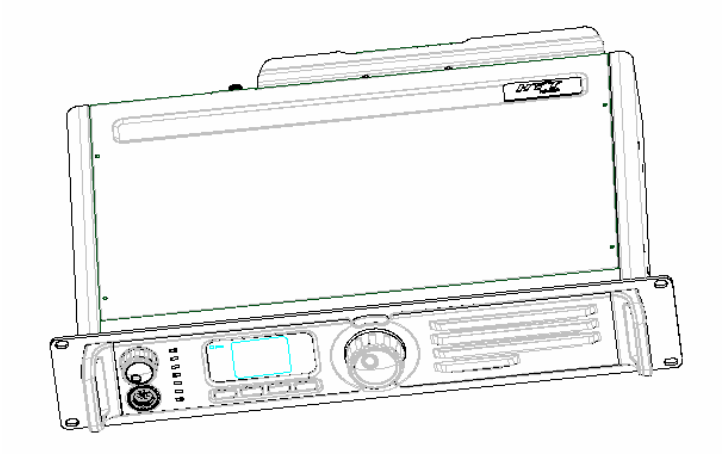

Channel Unit

Owner's Manual

Channel Unit overview

Front Panel

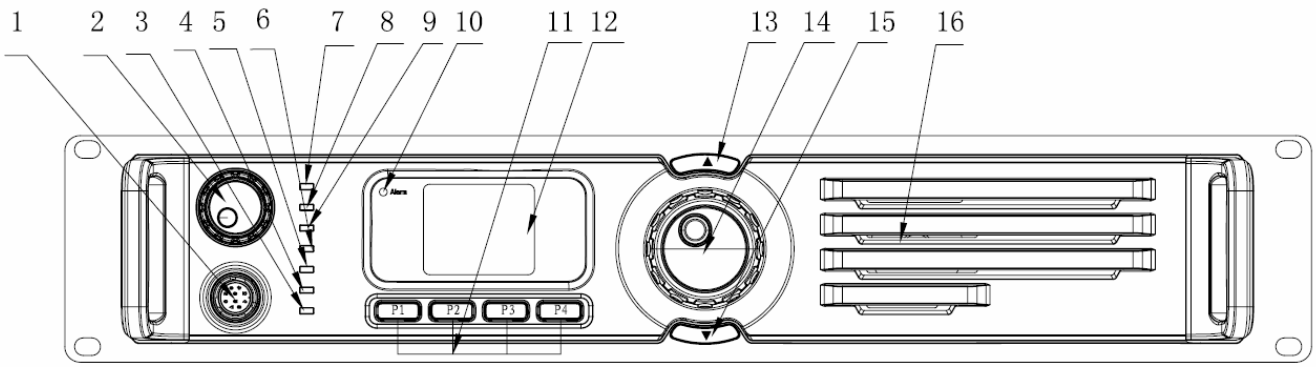

No.	Part Name	No.	Part Name
①	Accessory Jack	②	Volume Control Knob / Power Indicator
③	Unit Mode Indicator	④	Analog Mode Indicator
⑤	Slot 2 RX Indicator	⑥	Slot 2 TX Indicator
⑦	Digital Mode Indicator	⑧	Slot 1 TX Indicator
⑨	Slot 1 RX Indicator	⑩	Alarm Indicator
⑪	Programmable Keys ＊	⑫	LCD Display
⑬	Channel Up Key ＊	⑭	Menu Navigation Knob
⑮	Channel Down Key ＊	⑯	Speaker

Rear Panel

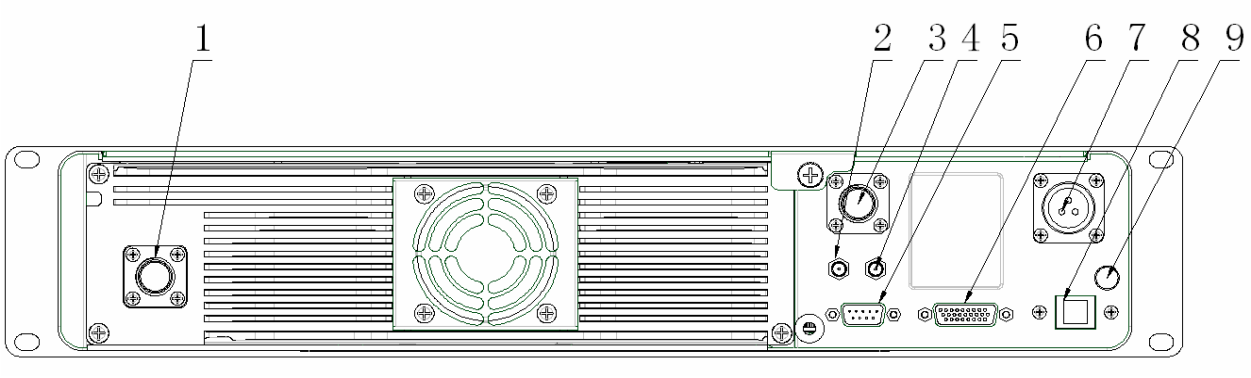

No.	Part Name	No.	Part Name
①	TX Antenna Connector	②	Optional Connector 1
③	RX/Duplex Antenna Connector	④	Optional Connector 2
⑤	Monitor/Test Jack	⑥	Accessory Jack
⑦	DC Power Inlet	⑧	Ethernet Port *
⑨	Ground Screw		

Internal Parts

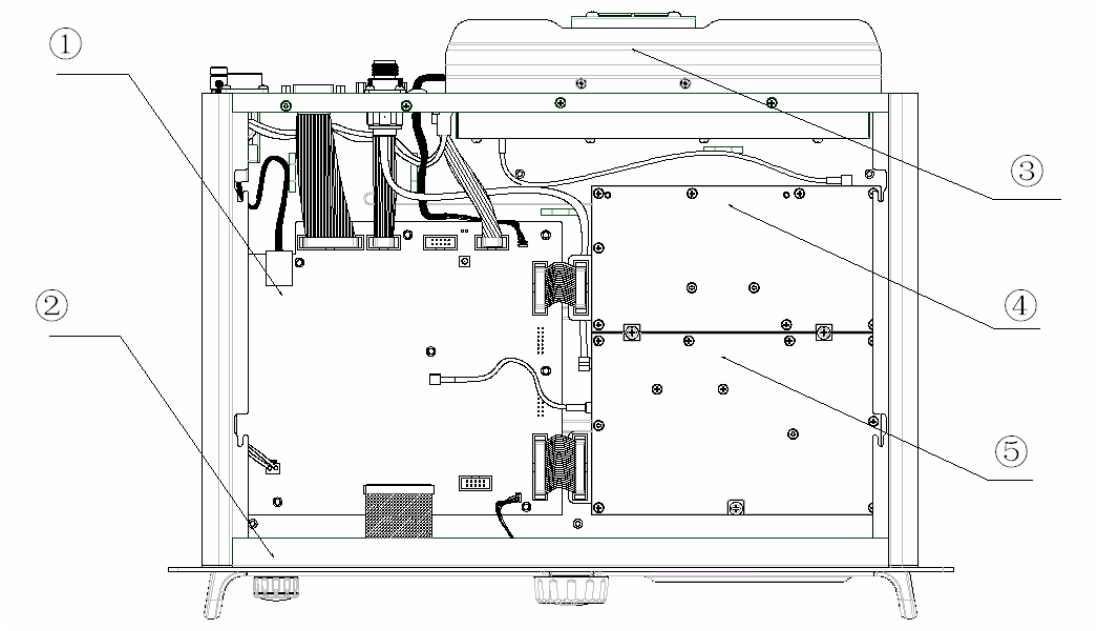

No.	Part Name	No.	Part Name
①	Baseband Module	②	Front Panel
③	RF PA Module	④	Excitor Module
⑤	RX Module		

Installation

Proper installation can ensure optimum performance and reliability of the unit. Be sure to read the following installation requirements and instructions carefully, before you install the unit.

Installation Overview

The information below is an overview for installing the unit and auxiliary equipment.

- Unpack and inspect the equipment.
- Perform a pre-installation function check test of the equipment, and configure parameters.
- Pay particular attention to environmental conditions at the site, ventilation requirements, and grounding and lightning protection.
- Install the equipment at the site.
- Make necessary electrical and cabling connections, including the following:
  - DC power cord
  - Coaxial cables to TX and RX antennas (if you use two antennas)
- Perform a post-installation function check test of the equipment, to verify proper installation.

Before Installation

Before you install the unit at the site, you are suggested to power on the unit and check it for proper operation.

1. Applying Power

Before applying power to the unit, make sure the voltage of DC power supply or battery is compliant with the operating voltage range of the unit. Then connect the DC power supply or battery to supply power to the unit.

2. Verifying Proper Operation

Operation of the unit can be indicated by the 8 LEDs located on the front panel. After proper operation is verified, you can configure parameters for the unit.

⚠ Caution: Some unit components canbecome extremely hot during operation. Turn off all power and wait until the unit is sufficiently cool before touching the unit.

3. Configuring Parameters

You may customize unit parameters such as TX/RX frequency, TX power and signalling, according to user needs. After configuration of parameters is complete, you may perform site installation.

Installation Requirements

1. Environmental Conditions at Intended Installation Site

The unit may be installed in any location suitable for electronic communication equipment, provided that the environmental conditions do not exceed the equipment specifications for temperature, humidity and air quality.

- Operating Temperature

-30℃ to +60℃

This is the temperature measured in close proximity to the unit. For example, if the unit is mounted in a cabinet, the temperature within the cabinet is measured.

- Humidity

Humidity conditions should not exceed 95% relative humidity @ 50°C.

- Air Quality

For equipment operating in an area which is environmentally controlled and with the unit rack mounted, the airborne particle level must not exceed 25μg/m^3.

And for equipment operating in an area which is not environmentally controlled and with the unit cabinet mounted, the airborne particle level must not exceed 90μg/m^3.

⚠ Caution: If the unit is to be installed in an area which is usually dusty, dirty, or does not meet the air quality requirements, then the air used to cool the unit modules must be treated using appropriate filtering devices. Dust or dirt accumulated on the internal circuit boards and modules is not easily removed, and can cause malfunctions such as overheating and intermittent electrical connections.

2. Equipment Ventilation

The PA heatsink is equipped with a cooling fan used to provide forced convection cooling. When planning the installation, observe the following ventilation guidelines:

- Customer supplied cabinets must be equipped with ventilation slots or openings for

air to enter and exit. If several unit are installed in a single cabinet, ensure ventilation opening surrounding each unit allow for adequate cooling.

- All cabinets must have at least 10cm of open space between the air vents and any wall or other objects.
- When multiple cabinets (each equipped with several unit) are installed in an enclosed area, ensure appropriate ventilation and consider air conditioning or other climate control equipment, to satisfy the temperature requirements stated above.

3. Equipment Installation Methods

The CHU-P0BA01 may be mounted in a rack, bracket or cabinet, and may be placed on your desk.

4. Site Grounding and Lightning Protection

⚠ Caution: Proper site grounding and lightning protection are vitally important considerations. Failure to provide proper lightning protection may result in permanent damage to the unit.

The ground and lightning protection system is one of the most important considerations when designing a communication site. Proper grounding techniques and lightning protection are closely related, and the general category of site grounding may be divided into the following two sections:

- Electrical Ground

Ground wires carrying electrical current from circuitry or equipment at the site are included in the category of electrical ground. Examples include the AC and DC power used to source equipment located at the site, and wires or cables connected to alarms or sensors located at the site.

- Lightning Ground

Providing adequate lightning protection is critical to a safe reliable communication site. The unit is equipped with a ground screw located on the rear panel. This screw is used to connect the unit to the site grounding. All antenna cables, and AC and DC power cords, should be properly grounded and lightning protected by following the rules and guidelines provided in the above sections.

Installation Steps

You will need a Philips screwdriver (cross head screwdriver), a Torx (T10) screwdriver and a spanner, to install the unit.

⚠ Caution: Be sure to observe proper electrostatic discharge precautions if any part must be removed from the unit.

The installation steps are as follows:

1. Mount the unti in a rack, bracket or cabinet.
2. Connect accessories such as antenna cables and power cords to the unit.

If a duplexer needs to be mounted

If the unit needs to work with a duplexer, your will need to implement the following installation steps prior to the above steps 1 and 2.

1. Loosen the three screws on the bracket with a Philips screwdriver.

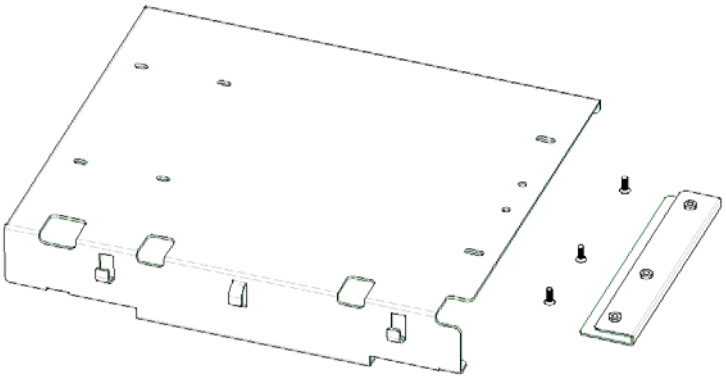

2. Install the optional duplexer and the bracket. Be sure to observe the specifications of the two antenna connectors on the duplexer, to determine which connector should be connect to the transmitter. Ensure the antenna connector connected to the transmitter is beside the rear panel of the unit.

   Take Hytera supplied duplexer as an example. If the transmitter is connected to the low cavity connector, the duplexer should be mounted with the front side facing upwards (see the following figure on the left); and if it is connected to the high cavity connector, the duplexer should be mounted with the front side facing downwards (see the following figure on the right).

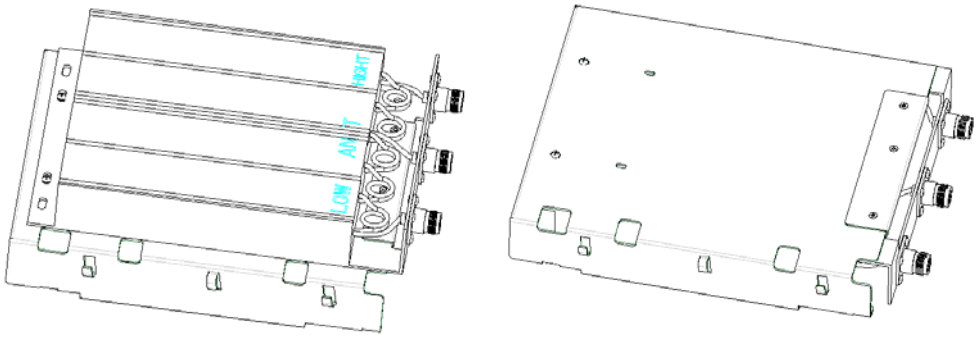

3. Loosen the screw at the back of the top cover, and then pull the top cover to remove it.

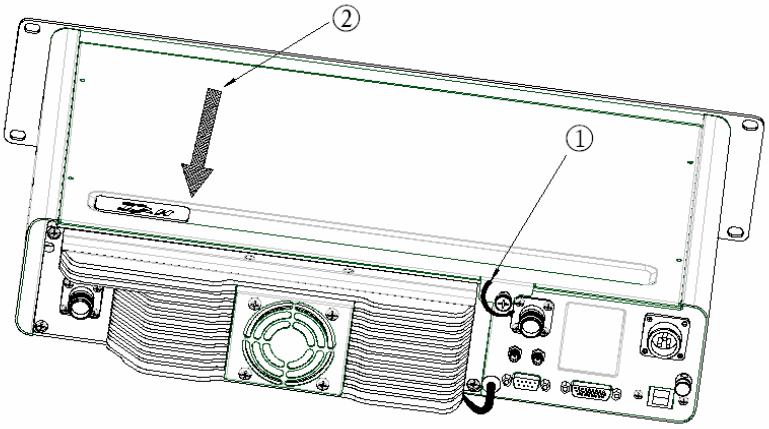

4. Loosen the 6 screws locking the PA heatsink, remove all power, data and RF cables from the PA, and finally remove the PA heatsink.

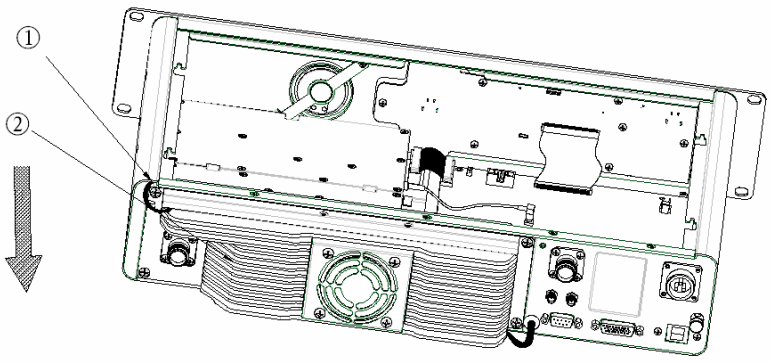

5. Mount the duplexer, and fasten the 2 screws inside the housing and on the side panel respectively. Then mount the PA heatsink, and connect all the lines and cables.

Ensure RF cables are properly connected between the duplexer and RF connectors.

TX signal:

Excitor module -> PA module -> Duplexer TX connector -> Duplexer antenna connector -> RX/duplex antenna connector (rear panel)

RX signal:

RX/duplex antenna connector (rear panel) -> Duplexer antenna connector -> Duplexer RX connector -> RX module

Diagrams of Assembled Unit

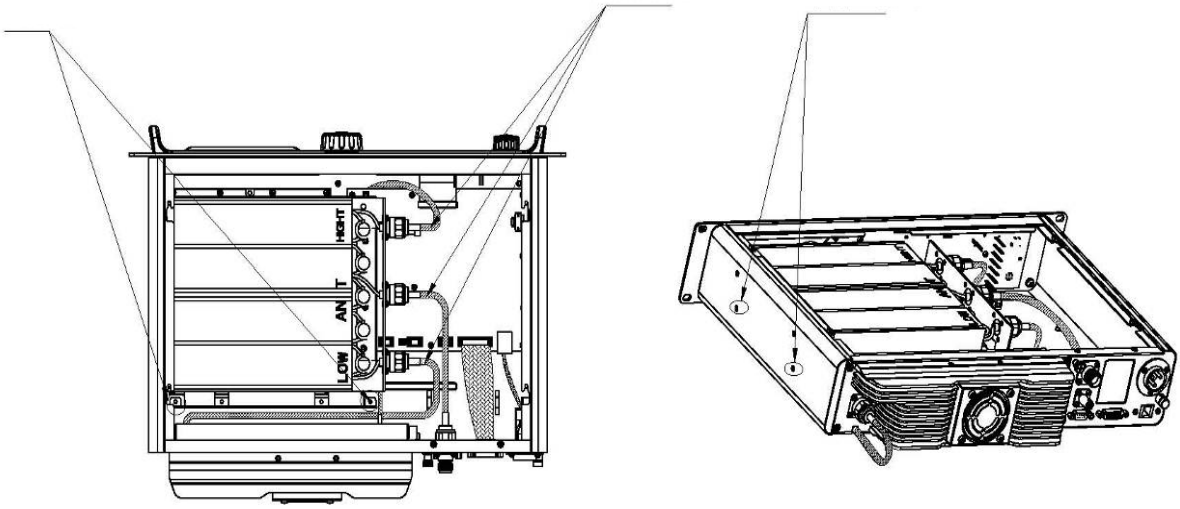

Duplexer Mounted with Front Side Facing Upwards

Screws

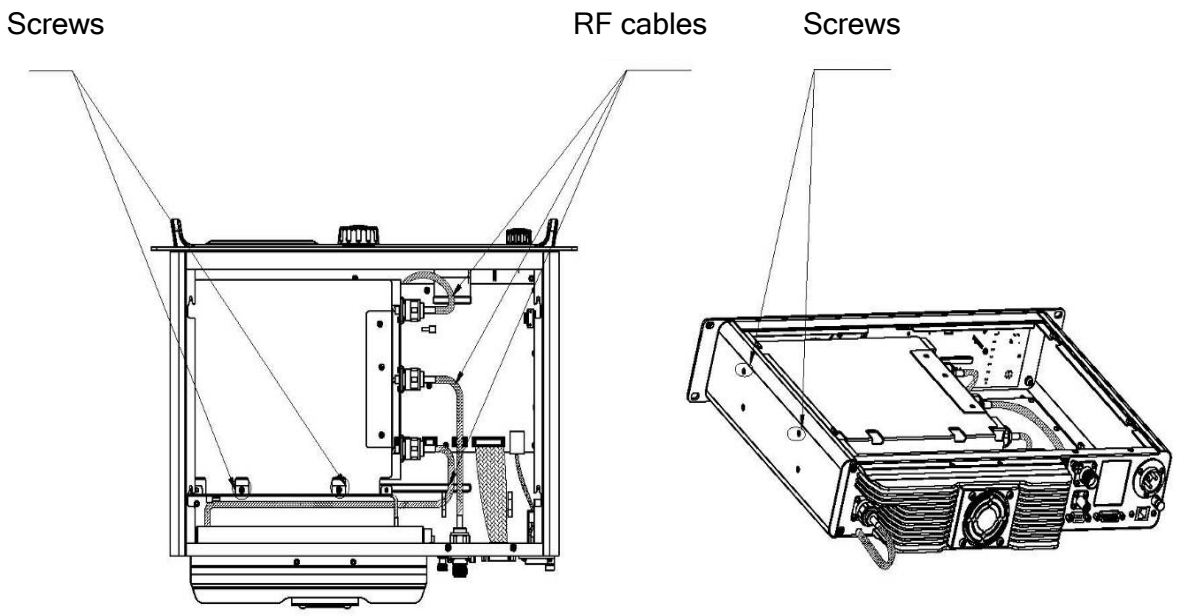

Duplexer Mounted with Front Side Facing Downwards

Electrical Connections

After the unit has been mechanically installed, electrical connections must be made.

This involves making the following connections:

- DC power cord
- Antenna cables

See the rear panel view for the positions of connectors.

Power Supply Connections

1. Ground Connection

The unit is equipped with a ground screw located on the rear panel. Connect ground wires to the screw.

2. DC Power Supply or Battery Backup Connection

The Unit may be connected to a regulated DC power supply or a backup battery.

The DC source or battery backup system is connected to the unit through the DC power inlet at the rear of the unit (see rear panel view).

⚠ Caution: Before you make the connection, ensure the DC power supply or battery backup system is capable of supplying a minimum of 200W, and check if the DC power supply has current limit. Since high current consumption is required for transmitting, improper setting of the current limit may cause transmission failure.

⚠ Caution: The unit is to be connected to a battery that is in accordance with applicable electrical regulations for the end use country. If battery power is exhausted, you are recommended to charge the battery with an external charger. Remove the battery from the unit when charging.

RF Antenna Connections

TX and RX antennas are connected to two separate connectors (shown in the rear panel view), and there must be adequate isolation of 75 dB UHF or 85 dB VHF between them. If only one antenna through a duplexer is connected, at least 75 dB UHF or 85 dB VHF isolation between the TX and RX antenna ports is required.

⚠ Caution: Please ensure that all power is switched off before disconnecting the TX antenna.

1. Duplexer Selection

The selection of duplexer is critical to system performance. The use of a notch (band reject) duplexer is possible in some systems that are not located at high RF density sites. If the unit is used in high RF density sites, the use of a pass-notch duplexer is recommended.

The duplexer must be able to handle at least 50W continuously. For the best system performance, the insertion loss should be less than 2dB.

2. Antenna Selection

The selection of antenna is also critical to system performance. The selected antenna must be 50 Ohm impedance and capable of at least 50W. High gain antennas may be used to increase system coverage. Please take note of licensing restrictions when selecting high gain antennas. Some services or regions may have antenna gain or system radiation limitations.

The antenna must be connected to the duplexer with a high grade 50 Ohm transmission line (e.g. Andrew HELIAX cables). The line must have connectors to match the connectors on the duplexer and antenna.

⚠ Caution: It is important that all antenna cables are grounded at the point they enter the building. All aspects of the antenna design must comply with the relevant local regulations.

Post-Installation Checklist

After the unit has been mechanically installed and all electrical connections have been made, power may now be applied and the unit should be checked for proper operation.

1. Applying Power

Before applying power to the unit, makesure all boards are securely seated in the appropriate connectors on the rear panel and all RF cables are securely connected.

Turn on the DC power source to supply power to the unit.

2. Verifying Proper Operation

Operation of the unit can be indicated by the 8 LEDs located on the front panel and also by LCD prompts.

⚠ Caution: Some unit components can become extremely hot during operation.

Turn off all power and wait until he unit is sufficiently cool before touching the unit

Status Indications

LED Indicator

LED Indicator	Unit Status
Power Indicator glows green	Unit being turned on
Alarm Indicator glows red	Unit giving an alarm due to failure of some component
Unit Mode Indicator glows green	Unit operating in Unit Mode (RM)
Unit Mode Indicator is not lit	Unit operating in Unit Base Mode
	(RBM)
Slot 1 TX Indicator glows red	Unit transmitting (analog) / unit transmitting on slot 1 (digital)
Slot 1 TX Indicator flashes red	Busy channel lockout ∗ / transmission time-out ∗
Slot 2 TX Indicator glows red	Unit transmitting on slot 2 (digital)
Slot 2 TX Indicator flashes red	Busy channel lockout ∗ / transmission time-out ∗
Slot 1 RX Indicator glows green	Unit receiving (analog) / unit receiving on slot 1 (digital)
Slot 1 RX Indicator flashes green	Monitoring ∗
Slot 2 RX Indicator glows green	Unit receiving on slot 2 (digital)
Analog Mode Indicator glows yellow	Unit operating in analog mode
Digital Mode Indicator glows blue	Unit operating in digital mode

Basic Operations

Turning the unit On/Off

Connect the unit to a DC source to turn the unit on. At this time, the Power Indicator glows green and the unit shows the power-up screen.

To turn the unit off, disconnect it from the DC source.

Care and Cleaning

To guarantee optimal performance as well as a long service life of your unit, please follow the tips below.

Unit Care

- Keep the unit at a place of good ventilation and heat dissipation to facilitate normal work.
- Do not place irrelevant articles on top of the unit to ensure optimal heat dissipation.

  Do not place the unit in corrosive agents, solutions or water.

Unit Cleaning

- Clean up the dust and fine particles on the unit parts with a clean and dry lint-free cloth or a brush regularly.
- Use a non-woven cloth with neutral cleanser to clean the keys, control knobs, LCD and jacks after long-time use. Do not use chemical preparations such as stain removers, alcohol, sprays or oil preparations. Make sure the unit is completely dry before use.

Caution: Power off the unit before cleaning.

RED

The product is in conformity with the basic requirements of the applicable European directives. This is confirmed by the marking (CE) of the installed components. The Declarations of Conformity of the installed components may be viewed upon request.
The product is assigned the equipment class code for radio equipment of class 2 (2.12) and is marked as follows.

CE

Within the scope of the European Directive 2014/53/EU, the network operator must ensure that the health and safety of the product user and other persons (Article 3 (1)a of 2014/53/EU and 1999/519/EC) are guaranteed. With respect to the exposure of people to electromagnetic fields (110 MHz to 40 GHz), product standard EN 62311 must be applied.
The product complies with the safety-related requirements of the European Low voltage directive (2014/35/EU, 2006/95/EC) due to application of the standard E62368-1. The requirements of this standard must not be violated when using the product.

To ensure optimal performance and compliance with the occupational/controlled environment RF energy exposure limits in the above standards and guidelines, users should always adhere to the followings:

- Gain of antenna must not exceed 7.1dBi.
- Antenna Installation: install the antenna at least 2.1 meters away from your body, in accordance with the requirements of the antenna manufacturer/supplier.
- The frequency band is 136-174MHz, the maximum power is 100W(50dBm), the low power is 5W(36.98dBm).

Operating authorizations must exist to operate the product in the following member states of the European Union and further states, refer to the table below.

Member states of the European Union			
BE	BG	CZ	DK
DE	EE	IE	EL
ES	FR	HR	IT
CY	LV	LT	LU
HU	MT	NL	AT
PL	PT	RO	SI
SK	FI	SE	UK
Further states			
CH	IS	LI	NO
TR	---	---	---

The abbreviations for the member states of the European Union are as follows: Belgium(BE), Bulgaria (BG), Czech Republic (CZ), Denmark (DK), Germany (DE),Estonia (EE), Ireland (IE), Greece (EL), Spain (ES), France (FR), Croatia (HR), Italy(IT), Cyprus (CY), Latvia (LV), Lithuania (LT), Luxembourg (LU), Hungary (HU), Malta(MT), Netherlands (NL), Austria (AT), Poland (PL), Portugal (PT), Romania (RO),Slovenia (SI), Slovakia (SK), Finland (FI), Sweden (SE).

FCC

This device complies with Part 15 of the FCC Rules. Operation is subject to the following two conditions: (1) this device may not cause harmful interference, and (2) this device must accept any interference received, including interference that may cause undesired operation.
changes or modifications not expressly approved by the party responsible for compliance could void the user's authority to operate the equipment.
This equipment has been tested and found to comply with the limits for a Class B digital device, pursuant to Part 15 of the FCC Rules. These limits are designed to provide reasonable protection against harmful interference in a residential installation. This equipment generates, uses and can radiate radio frequency energy and, if not installed and used in accordance with the instructions, may cause harmful interference to radio communications. However, there is no guarantee that interference will not occur in a particular installation.
If this equipment does cause harmful interference to radio or television reception, which can be determined by turning the equipment off and on, the user is encouraged to try to correct the interference by one or more of the following measures:
-- Reorient or relocate the receiving antenna.
-- Increase the separation between the equipment and receiver.
-- Connect the equipment into an outlet on a circuit different from that to which the receiver is connected.
-- Consult the dealer or an experienced radio/TV technician for help.
This equipment complies with FCC radiation exposure limits set forth for an controlled environment. This transmitter must not be co-located or operating in conjunction with any other antenna or transmitter.

To ensure optimal performance and compliance with the occupational/controlled environment RF energy exposure limits in the above standards and guidelines, users should always adhere to the followings:

- Gain of antenna must not exceed 7.1dBi.
- Antenna Installation: install the antenna at least 2.03 meters away from your body, in accordance with the requirements of the antenna manufacturer/supplier.
- The frequency band is 136-174MHz, the maximum power is 100W(50dBm), the low power is 5W(36.98dBm).

IC

This equipment complies with IC RSS-102 radiation exposure limits set forth for an controlled environment. This equipment should be installed and operated with minimum distance 2.3m between the radiator and your body. Cet équipement est conforme aux limites d'exposition aux radiations IC CNR-102 établies pour un environnement contrôlé. Cet équipement doit être installé et utilisé avec une distance minimale de 2.3m entre le radiateur et votre corps.
This device complies with Industry Canada license-exempt RSS standard(s). Operation is subject to the following two conditions:
(1) this device may not cause interference,
and (2) this device must accept any interference, including interference that may cause undesired operation of the device.
Le présent appareil est conforme aux CNR d'Industrie Canada applicables aux appareils radio exempts de licence. L'exploitation est autorisée aux deux conditions suivantes :
(1) l'appareil ne doit pas produire de brouillage,
et (2) l'utilisateur de l'appareil doit accepter tout brouillage radioélectrique subi, même si le brouillage est susceptible d'en compromettre le fonctionnement.

Afin d'assurer une performance optimale et de respecter les limites d'exposition à l'énergie radiofréquence dans l'environnement professionnel / réglementé énoncées dans les normes et directives ci - dessus, l'utilisateur doit toujours respecter les prescriptions suivantes:
Le gain d 'antenne ne doit pas dépasser 7.1dBi.
Installation d 'antenne: selon le fabricant / fournisseur, l' antenne est installée à au moins 2,3 mètres de votre corps.
La bande de fréquences est de 136 à 174 MHz, la puissance maximale est de 100W (50 dBm) et la faible puissance de 5 W (36,98 dBm).