Preface

Thanks for your favor in our product. This manual is helpful for you to quickly know how to use the product. For detailed features and operations, please refer to the *Feature Description and Operation Manual* along with the product.

To avoid body injury or property loss caused by misoperation, please read the *Safety Information Booklet* carefully before use.

This manual is applicable to the following product:

MD61X Digital Mobile Radio (X may represent 2, 5, 6 or 8)

Icon Conventions

- : Indicates functions that are available on digital channel only.
- : Indicates functions that are available on analog channel only.

Functions marked with no icon are available on both analog and digital channels.

Disclaimer

Hytera Communications Corporation Limited (the Company) endeavors to achieve the accuracy and completeness of this manual, but no warranty of accuracy or reliability is given. All the specifications and designs are subject to change without notice due to continuous technology development. No part of this manual may be copied, modified, translated, or distributed in any manner without the express written permission of us.

We do not guarantee, for any particular purpose, the accuracy, validity, timeliness, legitimacy or completeness of the Third Party products and contents involved in this manual.

If you have any suggestions or would like to learn more details, please visit our website at: http://www.hytera.com.

RF Radiation Information

This product must be restricted to operations in an occupational/controlled RF exposure environment. Users must be fully aware of the hazards of the exposure and able to exercise control over their RF exposure to qualify for the higher exposure limits.

RF Radiation Profile

Radio Frequency (RF) is a frequency of electromagnetic radiation in the range at which radio signals are transmitted. RF technology is widely used in communication, medicine, food processing and other fields. It may generate radiation during use.

RF Radiation Safety

In order to ensure user health, experts from relevant industries including science, engineering, medicine and health work with international organizations to develop standards for safe exposure to RF radiation. These standards consist of:

- United States Federal Communications Commission, Code of Federal Regulations; 47CFR part 2 sub-part J;
- American National Standards Institute (ANSI)/Institute of Electrical and Electronic Engineers (IEEE) C95. 1-1992;
- Institute of Electrical and Electronic Engineers (IEEE) C95.1-1999;
- International Commission on Non-Ionizing Radiation Protection (ICNIRP) 1998;

EU Regulatory Conformance

As certified by the qualified laboratory, the product is in compliance with the essential requirements and other relevant provisions of the Directive 1999/5/EC.

Please note that the above information is applicable to EU countries only.

Contents

1. Items in the Package **1**
2. Product Overview **1**
2.1 Front Panel 2
2.2 Rear Panel 3
2.3 Programmable Keys 3
2.4 LCD Icon 3
2.5 LED Indicator 4
3. Installation **5**
3.1 Instructions 5
3.2 Installation Tools 5
3.3 Installation Parts 6
3.4 Installation Procedure 7
4. Basic Operations **8**
4.1 Turning the Radio On/Off 8
4.2 Adjusting the Volume 8
4.3 Selecting a Zone 8
4.4 Selecting a Channel 9
5. Call Services **10**
5.1 Private Call 9
5.2 Group Call 10
5.3 Call on Analog Channel (Without Signaling) 11
5.4 Emergency Call 11
6. Troubleshooting **12**
7. Available Features **12**
8. Care and Cleaning **14**
9. Optional Accessories **15**

1. Items in the Package

Please unpack carefully and check if all items listed below are received. If any item is missing or damaged, please contact your dealer.

		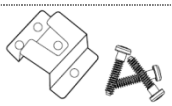
Radio	Palm Microphone	Microphone Hanger and Screws
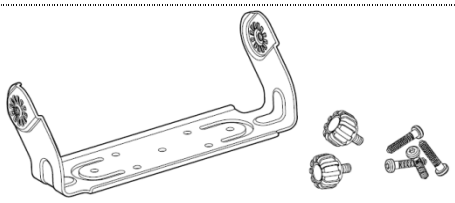		
Mounting Bracket Kit	Fuse	Documentation Kit
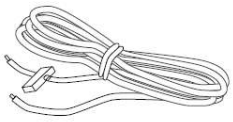		
Power Cord		

Note

The frequency band is marked on the label of antenna; if not, please refer to the label on the radio for frequency band information.

2. Product Overview

2.1 Front Panel

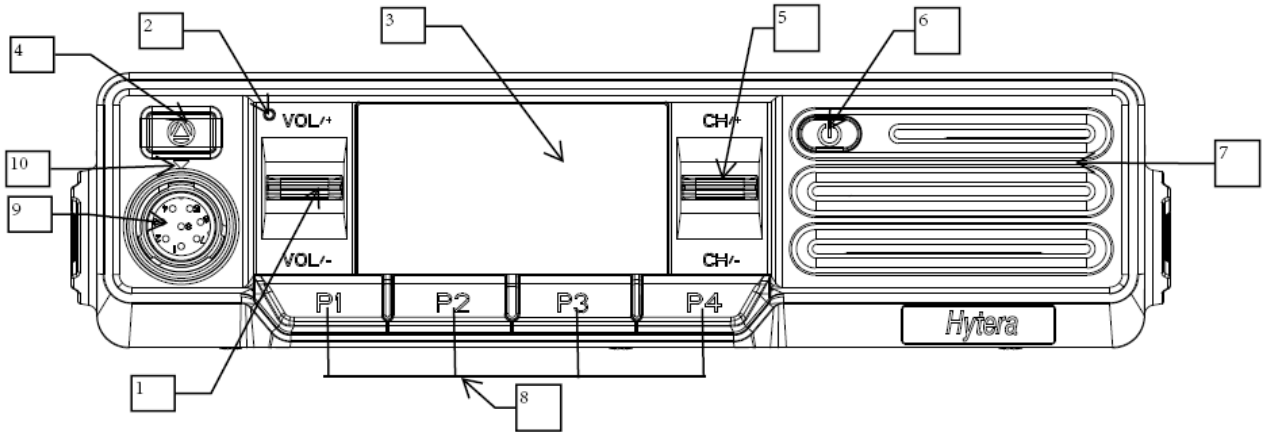

No.	Part Name	No.	Part Name
1	Volume Control	7	Speaker
2	LED Indicator	8	Programmable Keys
3	LCD Display	9	Microphone Connector
4	Programmable Keys	10	Microphone Installation Index
5	Channe selector	11	
6	Power On/Off Key	12	

2.2 Rear Panel

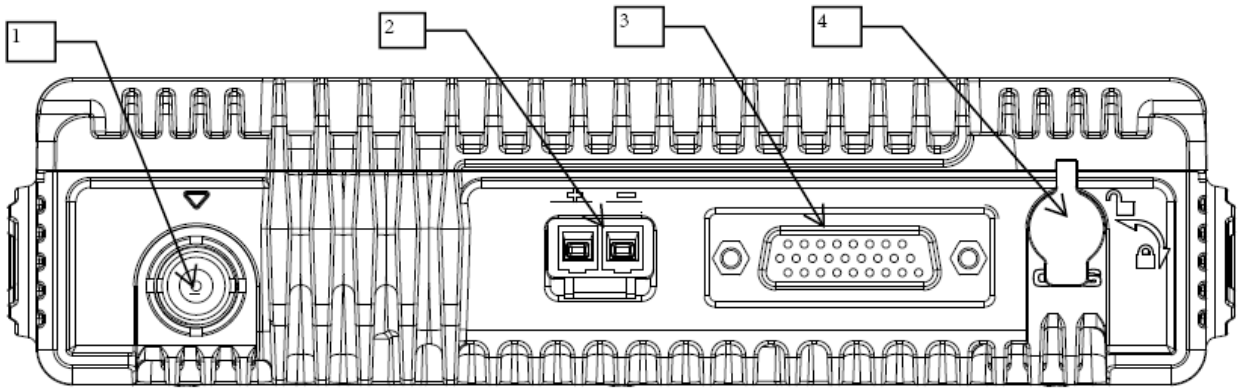

No.	Part Name	No.	Part Name
1	RF Antenna Connector (BNC female)	3	Accessory Connector
2	Power Inlet	4	GPS Antenna Connector (SMA female)

Note: The GPS antenna connector is available for MD61X mobile radios only.

2.3 Programmable Keys

For enhanced convenience, you may request your dealer to program the **SK1**, **SK2**, **P1**, **P2** and **P3** keys as shortcuts to certain feature.

2.4 LCD Icon

Icon	Radio Status
B	Blue Tooth is open and connet
L	Low TX power for the current channel.
H	High TX power for the current channel.
	Digital channel
	Analog channel
	The Monitor feature is active.
	The radio is in emergency state or an emergency call is received.

Icon	Radio Status
	The radio is roaming.
	The radio is scanning.
	More bars indicate stronger signal strength.

2.5 LED Indicator

LED Indication	Radio Status
The LED indicator flashes green.	Powering on
The LED indicator glows red.	Transmitting
The LED indicator glows green.	Receiving
The LED indicator flashes orange slowly.	Scanning or Roaming
The LED indicator flashes orange rapidly.	Emergency
The LED indicator glows orange.	Call hang time. No voice is being transmitted or received on the traffic channel during a call. Within such period, you can hold down the **PTT** key to talk to the other party.

Note: Unless otherwise specified, the **PTT** key mentioned in this manual indicates that of the palm microphone.

3. Installation

3.1 Instructions

Before you install the radio in a vehicle, be sure to read the following instructions carefully:

- The radio must work with a13.6V ± 15% negative ground electrical system only. Ensure to check the ground polarity and voltage of the vehicle power supply prior to installation.
- Install the radio in a location where you can reach the front panel conveniently.
- Check how long the screws will extend from the bottom surface of the radio before installation. Drill the mounting hole cautiously to avoid damage to the vehicle wiring and other parts.
- Install the radio with mounting bracket supplied by the Company, to avoid radio looseness in case of accidents. The loose radio may cause bodily injury.
- Connect the antenna and power cord to the radio before you install it in the bracket. And make sure the antenna and power cord are dedicated for digital radios of the Company.
- Keep sufficient clearance at the back of the radio for wiring.
- Be sure to use the fuse with the same specification for DC power cord upon replacement.
- If there are any other device in the vicinity of this radio, the distance between the antenna of this radio and the antenna of such RF device shall be no less than 10 meters.

3.2 Installation Tools

- Electric Drill
- Cross head screwdriver
- Hex socket sleeve (for 4.8 * 20mm self-tapping screws)

3.3 Installation Parts

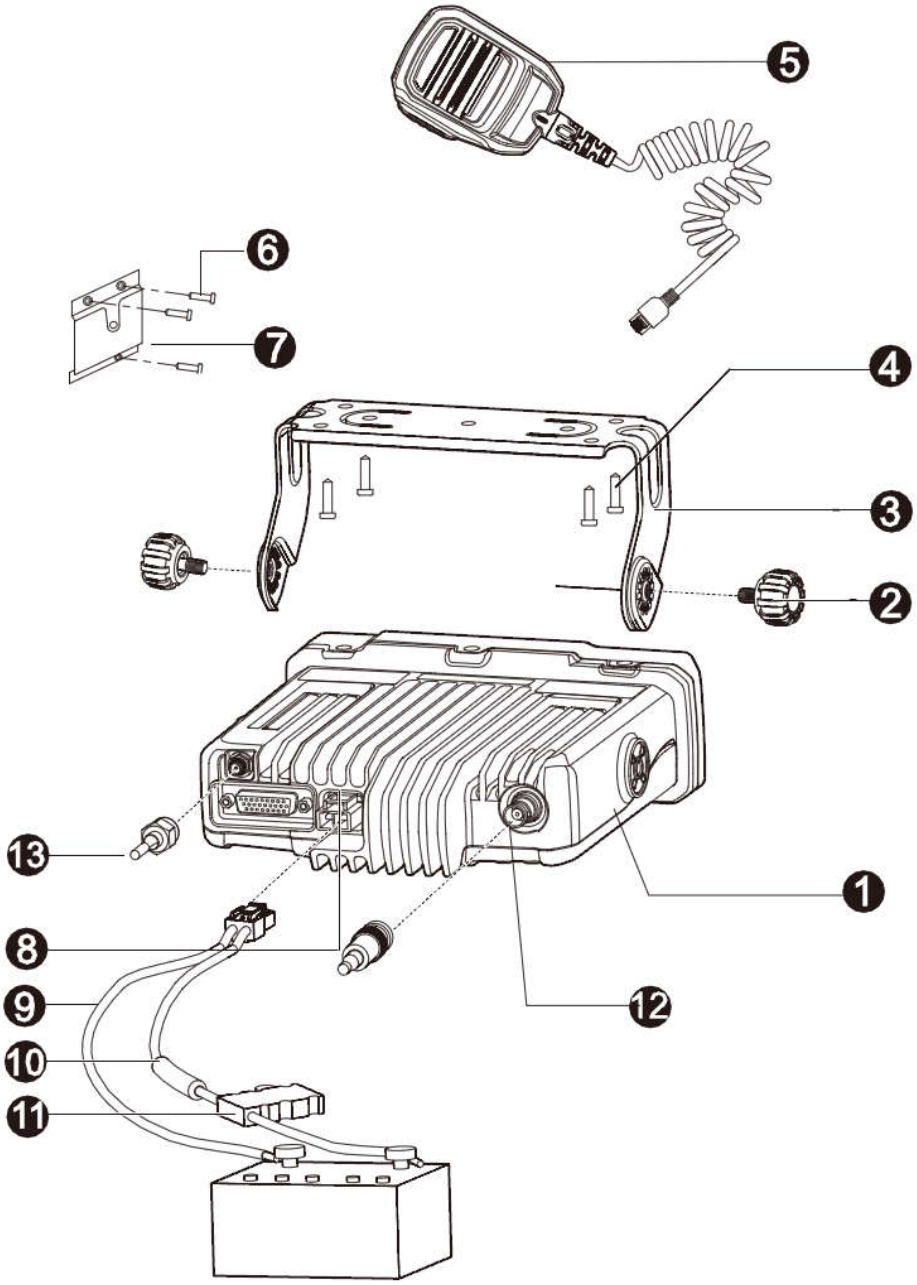

No.	Part Name	No.	Part Name
1	Radio	8	Power Inlet
2	Locking Knobs	9	Power Cord (black)
3	Mounting Bracket	10	Power Cord (red)
4	4.8 * 20mm Self-tapping Screws	11	Fuse
5	Palm Microphone	12	RF Antenna Connector

No.	Part Name	No.	Part Name
6	4 * 16mm Self-tapping Screws	13	GPS Antenna Connector
7	Microphone Hanger	/	/

3.4 Installation Procedure

1. Install the **bracket** in a location where you can operate the radio conveniently.
2. Connect accessories such as the **antenna** and **power cord** to the radio.
3. Slide the **radio** into the properly mounted bracket and secure it using the locking knobs.
4. Install the **microphone hanger** in a location where it can be reached easily.
5. Plug the **palm microphone** into the radio, but at first align the triangle index on the palm microphone with the microphone installation index. Place the palm microphone on the hanger when you do not use it.

4. Basic Operations

4.1 Turning the Radio On/Off

Long press Power On/Off key to turn the radio on and off.

4.2 Adjusting the Volume

After the radio is powered on,turn the volume menu up increase the voice volume, turn the volume menu down is to decease it.

4.3 Selecting a Zone

A zone is a group of channels with the same property, which can facilitate convenient management over the channels. The radio supports 3 zones, each of which consists of up to 16 channels. If the Zone Notify feature is enabled by your dealer, the radio will announce the zone number when selecting zone.

4.4 Selecting a Channel

You can press the **Channel Selector** knob to switch it to channel selection

If the Channel Notify feature is enabled by your dealer, the radio will announce the channel number upon channel switching.

Note

- The number and alias of a new contact must be unique.

5. Call Services

After the radio is powered on, you can make and receive calls. To ensure optimal volume of the receiving radio, keep the microphone about 2.5 to 5 centimeters away from your mouth when the radio is transmitting.

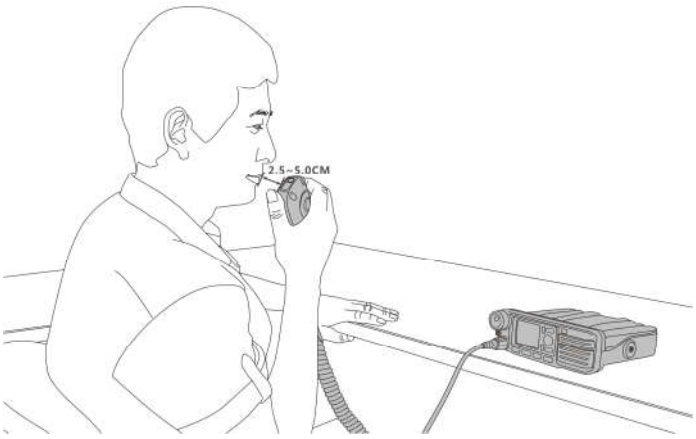

5.1 Private Call

5.1.1 Initiating a Private Call

When you initiate a private call, the radio will display the icon . You can make a private call through any of the following ways:

Preset Contact

In the home screen, hold down the **PTT** key to initiate a private call to the private contact preset for the current channel.

You may request your dealer to preset a regular private contact for each digital channel.

Contact List

Step 1 Go to “Menu -> Contact -> Contact List”.

Step 2 Use the **Up**/**Down** key to select an appropriate contact.

Step 3 Hold down the **PTT** key to initiate a private call.

Call Logs

Step 1 Go to “Menu -> Call Logs -> Outgoing/Incoming/Missed”.

Step 2 Use the **Up**/**Down** key to select an appropriate contact.

Step 3 Hold down the **PTT** key to initiate a private call.

Manual Dial

Step 1 Go to “Menu -> Contact -> Manual Dial”.

Step 2 Input the private call number using the numeric keypad.

Step 3 Hold down the **PTT** key to initiate a private call.

Note

- If both the Private Call Manual Dial and Group Call Manual Dial are available, you can press # ↑ to switch between the two dialing methods, and the radio will display the call type (Private ID/ Group ID).
- If the Default Numeric Key Selection feature is enabled by your dealer, you can enter a private call number in the home screen, and then hold down the **PTT** key to initiate a private call. However, if the DTMF keypad is enabled, the number entered in the home screen is a phone number. You can dial the private call number through the “Manual Dial” menu only.

5.1.2 Receiving and Responding to a Private Call

When you receive a private call, the radio will display the icon , then you can listen to it without any operation. You can hold down the **PTT** key to call back within the preset time. If you do not respond to it, the radio will display appropriate indications.

5.2 Group Call

5.2.1 Initiating a Group Call

When you initiate a group call, the radio will display the icon . You can make a group call through any of the following ways. The operation is similar to initiating a private call.

Preset Contact

In the home screen, hold down the **PTT** key to initiate a group call to the group call contact preset for the current channel.

Contact List

Step 1 Go to “Menu -> Contact -> Contact List”.

Step 2 Use the **Up**/**Down** key to select an appropriate contact.

Step 3 Hold down the **PTT** key to initiate a group call.

Manual Dial

The operation is the same as initiating a private call.

5.2.2 Receiving and Responding to a Group Call

When you receive a group call, the radio will display the icon on the LCD. You can hold down the **PTT** key to call back within the preset time.

5.3 Call on Analog Channel (Without Signaling)

To transmit on an analog channel, hold down the **PTT** and speak into the microphone. To receive, release the **PTT** key.

Please refer to the *Feature Description and Operation Manual* along with the product for operation description on how to make and receive calls on the analog channel with signaling.

5.4 Emergency Call

In case of emergency, you can use Emergency Call to ask for help from your companion or the control center.

Emergency Call needs to be configured and enabled by your dealer. Please refer to the *Feature Description and Operation Manual* along with the product for details.

6. Troubleshooting

Phenomena	Analysis	Solution
The radio cannot be powered on.	The power cord may be disconnected.	Connect the power cord properly.
During receiving, the voice is weak, discontinuous or totally inactive.	The volume level may be low.	Increase the volume by rotating the **Volume Control** knob.
	The antenna may get loose or may be improperly installed.	Turn off the radio and reattach the antenna.
	The speaker may be blocked or damaged.	Clean the surface of the speaker.
You cannot communicate with other members in analog mode.	The frequency or signaling may be inconsistent with that of other members.	Set your TX/RX frequency and signaling to the same as that of other members.
	You may be too far away from the group members.	Move towards other members.
In digital mode, there's RX indication on the radio, you cannot communicate with other members.	The digital carrier may be received but may not be demodulated due to inconsistent ID with that of other members.	Sets the same ID of other members.
Irrelevant communication or noise is heard on the channel.	You may be interrupted by radios using the same frequency.	Adjust the squelch level.
	The radio may be set with no signaling.	Set your radio with signaling to avoid interference at the same frequency, and make sure that all members share the same signaling.
The noise is too loud.	You may be too far away from other members.	Move towards other members, and restart the radio to try again.

Phenomena	Analysis	Solution
	You may locate in an unfavorable position. For example, your communication may be blocked by high buildings or frustrated in the underground areas.	Move to an open and flat area, and restart the radio to try again.
	You may suffer from external disturbance (such as electromagnetic interference).	Stay away from equipment that may cause interference.
You cannot use the keys.	The keypad may fail to function temporarily.	Restart the radio.
The LCD does not display any information.	The LCD may fail to function temporarily.	Restart the radio.
The GPS cannot locate your position.	The GPS antenna may be connected improperly.	Properly connect the GPS antenna.
	GPS signals may not be received due to unfavorable position.	Move to an open and flat area to try again.

If the above solutions cannot fix your problems, or you may have some other queries, please contact us or your local dealer for more technical support.

7. Care and Cleaning

To guarantee optimal performance as well as a long service life of the product, please follow the tips below.

Product Care

- Do not pierce or scrape the product.
- Keep the product far away from substances that can corrode the circuit.
- Do not hold the product by its antenna or earpiece cable directly.
- Attach the accessory connector cover when the accessory is not in use.

Product Cleaning

Caution: Power off the product and disconnect the power supply before cleaning.

- Clean up the dust and fine particles on the product surface and charging piece with a clean and dry lint-free cloth or a brush regularly.
- Use neutral cleanser and a non-woven fabric to clean the keys, control knobs and front case after long-time use. Do not use chemical preparations such as stain removers, alcohol, sprays or oil preparations, so as to avoid surface case damage.
- Make sure the product is completely dry before use.

8. Optional Accessories

The following items are the main optional accessories for the product, and please consult your local dealer for more other accessories.

Caution: Use the accessories specified by the Company only. If not, the Company shall not be liable for any loss or damage arising out of use of unauthorized accessories.

Type	Model	Name
Power Supply	PS16001	Power Supply of Base Station Cabinet
	PS22002	Power Supply for Mobile Radio (220W, Backup Power Supply applicable)
Audio Accessories	SM09D1	External Speaker
	SM10A1	Desktop Microphone
	SM19A1	Keypad Microphone
	SM20A1	Telephone Style Handset
	SM20A2	Telephone Style Handset with Keypad
Cable	PC37	DB26-connector Programming Cable (USB port)
	PC40	DB26-connector Data Cable (USB port)
	PC43	DB26-connector Dispatching Cable with USB Port&Dual Audio Jack
	PC46	Data Cable(COM Port)
	PC47	Programming Cable (USB port)
	PC48	Data Cable(COM Port)(6 meters)
	PC49	Back-to-back Data Cable (DB26 to DB26)
	PC60	Ignition Cable for Mobile Radio
	PC71	Serial Device Server
Others	BRK15	Installation Accessory for Rack-mounted Power Supply (2U)(Black)(Dual channel)
	RCC04	Mobile Radio Remote Mount Kit (3 meters)(IP67)

Type	Model	Name
	RCC05	Mobile Radio Remote Mount Kit (6 meters)(IP67)
	RCC06	Mobile Radio Remote Mount Kit (3 meters)(IP54)
	RCC07	Mobile Radio Remote Mount Kit (6 meters)(IP54)
	-	Omni-directional Antenna

FCC Statement

This equipment has been tested and found to comply with the limits for a Class B digital device, pursuant to part 15 of FCC Rules. These limits are designed to provide reasonable protection against harmful interference in a residential installation. This equipment generates and can radiate radio frequency energy. If not installed and used in accordance with the instructions, it may cause harmful interference to radio communications. However, there is no guarantee that interference will not occur in a particular installation. Verification of harmful interference by this equipment to radio or television reception can be determined by turning it off and then on.

The user is encouraged to try to correct the interference by one or more of the following measures:

- Reorient or relocate the receiving antenna. Increase the separation between the equipment and receiver.
- Connect the equipment into an outlet on a different circuit to that of the receiver's outlet.
- Consult the dealer or an experienced radio/TV technician for help.

Operation is subject to the following two conditions:

- This device may not cause harmful interference.
- This device must accept any interference received, including interference that may cause undesired operation.

Note: Changes or modifications to this unit not expressly approved by the party responsible for compliance could void the user's authority to operate the equipment.

FCC Regulations

Federal Communication Commission (FCC) requires that all radio communication products should meet the requirements set forth in the above standards before they can be marketed in the U.S, and the manufacturer shall post a RF label on the product to inform users of operational instructions, so as to enhance their occupational health against exposure to RF energy.

Operational Instructions and Training Guidelines

To ensure optimal performance and compliance with the occupational/controlled environment RF energy exposure limits in the above standards and guidelines, users should always adhere to the followings:

Gain of antenna must not exceed 3.65dBi (VHF).

Antenna Installation: install the antenna at least 100cm away from your body, in accordance with the requirements of the antenna manufacturer/supplier.

This radio complies with IEEE and ICNIRP exposure limits for occupational/controlled RF exposure environment at operating duty factors of up to 50% and is authorized by the FCC for occupational use only.

FCC Radiation Exposure Statement:

This equipment complies with FCC radiation exposure limits set forth for an controlled environment . This transmitter must not be co-located or operating in conjunction with any other antenna or transmitter. This equipment should be installed and operated with minimum distance 55cm between the radiator &you body.

ISEDC Statement

This device contains licence-exempt transmitter(s)/receiver(s) that comply with Innovation, Science and Economic Development Canada licence-exempt RSS standard (s). Operation is subject to the following two conditions: (1) this device may not cause interference, and (2) this device must accept any interference,including interference that may cause
undesired operation of the device.
Cet appareil contient des émetteurs/récepteurs exempts de licence qui sont conformes aux normes RSS exemptes de licence d'Innovation, Sciences et Développement économique Canada. L'exploitation est autorisée aux deux conditions
suivantes:
(1) l'areil ne doit pas produire de brouillage, et
(2) l'utilisateur de l'appareil doit accepter tout brouillage radioélectrique subi, onj si le brouillage est susceptible d'en compromettre le fonctionnement.

ISEDC Radiation Exposure Statement:

This equipment complies with ISEDC RF radiation exposure limits set forth for an controlled environment . This transmitter must not be co‐located or operating in conjunction with any other antenna or transmitter. This equipment should be installed and operated with minimum distance55cm between the radiator &you body.
IC exposition aux radiations:
Cet équipement est conforme avec ISEDC les limites d'exposition aux rayonnements définies
pour contrôlé environnement.
Cet émetteur ne doit pas être co-localisés ou fonctionner en conjonction avec une autre antenne ou émetteur. Cet équipement doit être installé et utiliséavec une distance minimale
de 55 cm entre leradiateur & votre corps.