MNC360 PoC Mobile Radio
User Manual

Hytera Communications Corporation Limited

Preface

Welcome to the world of Hytera and thank you for purchasing this product. This manual includes a description of the functions and step-by-step procedures for use.

To avoid bodily injury or property loss caused by incorrect operation, please carefully read the *Safety Information Booklet* before use.

This manual is applicable to the following product:

MNC360 PoC Mobile Radio

Copyright Information

Hytera is the trademark or registered trademark of Hytera Communications Corporation Limited (the Company) in the People's Republic of China (PRC) and/or other countries or areas. The Company retains the ownership of its trademarks and product names. All other trademarks and/or product names that may be used in this manual are properties of their respective owners.

The product described in this manual may include the Company's computer programs stored in memory or other media. Laws in PRC and/or other countries or areas protect the exclusive rights of the Company with respect to its computer programs. The purchase of this product shall not be deemed to grant, either directly or by implication, any rights to the purchaser regarding the Company's computer programs. The Company's computer programs may not be copied, modified, distributed, decompiled, or reverse-engineered in any manner without the prior written consent of the Company.

Disclaimer

The Company endeavors to achieve the accuracy and completeness of this manual, but no warranty of accuracy or reliability is given. All the specifications and designs are subject to change without notice due to continuous technological development. No part of this manual may be copied, modified, translated, or distributed in any manner without the prior written consent of the Company.

We do not guarantee, for any particular purpose, the accuracy, validity, timeliness, legitimacy or completeness of the third-party products and contents involved in this manual.

If you have any suggestions or would like to receive more information, please visit our website at: https://www.hytera.com/en/download-center.html.

CE

Spectrum and maximum power: 2.4 GHz band 18 dBm (EIRP), BT 8 dBm (EIRP), GSM900 33 dBm (Conducted), UMTS 23.5 dBm (Conducted), LTE: 22.5 dBm (Conducted)

Hereby, Hytera Communications Corporation Limited declares that the radio equipment type MNC360 PoC mobile radio is in compliance with Directive 2014/53/EU. The full text of the EU declaration of conformity is available at the following internet address: https://www.hytera.com/en/download-center.page.

Waste Electrical and Electronic Equipment (WEEE)

This symbol means that according to local laws and regulations your product shall be disposed of separately from household waste. When this product reaches its end of life, take it to a collection point designated by local authorities. Proper recycling of your product will protect human health and the environment.

FCC

This device complies with part 15 of the FCC Rules. Operation is subject to the following two conditions: (1) This device may not cause harmful interference, and (2) this device must accept any interference received, including interference that may cause undesired operation.

Changes or modifications not expressly approved by the party responsible for compliance could void the user's authority to operate the equipment.

This equipment has been tested and found to comply with the limits for a Class B digital device, pursuant to part 15 of the FCC Rules. These limits are designed to provide reasonable protection against harmful interference in a residential installation. This equipment generates, uses and can radiate radio frequency energy and, if not installed and used in accordance with the instructions, may cause harmful interference to radio communications. However, there is no guarantee that interference will not occur in a particular installation. If this equipment does cause harmful interference to radio or television reception, which can be determined by turning the equipment off and on, the user is encouraged to try to correct the interference by one or more of the following measures:

—Reorient or relocate the receiving antenna.

—Increase the separation between the equipment and receiver.

—Connect the equipment into an outlet on a circuit different from that to which the receiver is connected.

—Consult the dealer or an experienced radio/TV technician for help.

This device complies with FCC radiation exposure limits set forth for an uncontrolled environment. In order to avoid the possibility of exceeding the FCC radio frequency exposure limits, human proximity to the antenna shall not be less than 20cm (8 inches) during normal operation.

Contents

Documentation Information **1**
1. Packing List **2**
2. Product Layout **3**
3. Installation **4**
3.1 Precautions 4
3.2 Procedure 4
4. Basic Operations **6**
4.1 Turning On or Off the Radio 6
4.2 Restarting the Radio 6
4.3 Adjusting the Volume 6
4.4 Understanding the Screen 6
4.4.1 Status Indications 6
4.4.2 Screen Operations 7
4.5 Setting Programmable Keys 7
4.6 Using the Dual SIM Cards 8
4.6.1 Enabling or Disabling the SIM Cards 8
4.6.2 Setting the Preferred SIM Card 8
4.7 Checking the Radio Information 8
5. PoC Services **9**
6. System Settings **10**
6.1 WLAN 10
6.2 BT 10
6.2.1 Pairing with a BT Accessory 10
6.2.2 Unpairing a BT Accessory 10
6.2.3 Modifying a BT Accessory Name 10
6.3 Cellular Network 11
6.3.1 Enabling the Cellular Data 11
6.3.2 Checking the Data Usage 11
6.3.3 Selecting the Network Type 11
6.3.4 Enabling the Data Roaming 11
6.4 Airplane Mode 11
6.5 Hotspot 12
6.6 Display 12
6.6.1 Adjusting the Brightness 12
6.6.2 Setting the Sleep Time 12
6.6.3 Adjusting the Font Size 12
6.7 Sound 13

6.7.1 Setting the Profile 13
6.7.2 Selecting the Speaker 13
6.7.3 Enabling the Emergency Broadcast 13
6.8 Storage 13
6.8.1 Checking the Storage Usage 13
6.8.2 Freeing up the Storage Space 14
6.9 Memory 14
6.10 Location 14
6.10.1 Setting the Location Mode 14
6.10.2 Improving Location Accuracy 14
6.11 Language 15
6.12 Factory Data Reset 15
6.13 Safe Mode 15
6.14 Date and Time 16
6.14.1 Setting the Date, Time, and Time Zone 16
6.14.2 Setting the Time Format 16
6.15 Upgrade 16
7. Applications 18
7.1 Installing an Application 18
7.1.1 Through the APP Center 18
7.1.2 Through the Android Debug Bridge 18
7.2 Uninstalling an Application 18
7.3 Forcibly Stopping an Application 18
7.4 Clearing the Data or Cache 19
7.5 Setting the Application Permissions 19
8. Sound Recorder 20
8.1 Recording an Audio File 20
8.2 Managing an Audio File 20
9. Camera 21
9.1 Taking a Photo 21
9.2 Recording a Video 21
9.3 Viewing a Photo or Video 21
10. Gallery 22
10.1 Photos 22
10.1.1 Viewing a Photo 22
10.1.2 Managing Photos 22
10.2 Videos 23
10.2.1 Playing a Video 23
10.2.2 Managing Videos 23

11. Troubleshooting 25
12. Care and Cleaning 27
12.1 Product Care 27
12.2 Product Cleaning 27
13. Optional Accessories 28
14. Abbreviations 29

Documentation Information

Instruction Conventions

Icon	Description
NOTE	Indicates references that can further describe the related topics.
CAUTION	Indicates situations that could cause data loss or equipment damage.

Notation Conventions

Item	Description	Example
Boldface	Denotes menus, tabs, parameter names, window names, dialogue names, and hardware buttons.	To save the configuration, click **Apply**.
		The **Log Level Settings dialogue** appears.
		Press the **PTT** key.
" "	Denotes messages, directories, file names, folder names, and parameter values.	The screen displays "Invalid Battery!"
		Open "PSS.exe".
		Go to "D:/opt/local".
		In the **Port** text box, enter "22".
>	Directs you to access a multi-level menu.	Go to **File** > **New**.
Italic	Denotes document titles.	For details about using the DWS, refer to *Dispatch Workstation User Guide*.
`Courier New`	Denotes commands and their execution results.	To set the IP address, run the following command: `vos-cmd - m name IP`

Key Operations

Operation	Description
Short press	Press and release quickly.
Long press	Press and hold for preset time.
Press and hold	Keep the key pressed.

1. Packing List

Please unpack carefully and check that you have received the following items. If any item is missing or damaged, contact your dealer.

Item	Quantity (PCS)	Item	Quantity (PCS)
Mobile Radio	1	GPS Antenna	1
Bracket	1	Self-tapping Screw (5 mm x 12 mm)	4
Palm Microphone	1	Self-tapping Screw (4 mm x 16 mm)	3
Microphone Hanger	1	Power Cord (with fuse)	1
RF Antenna	2	Documentation Kit	1

NOTE

Figures in this manual are only for reference.

2. Product Layout

Mobile Radio

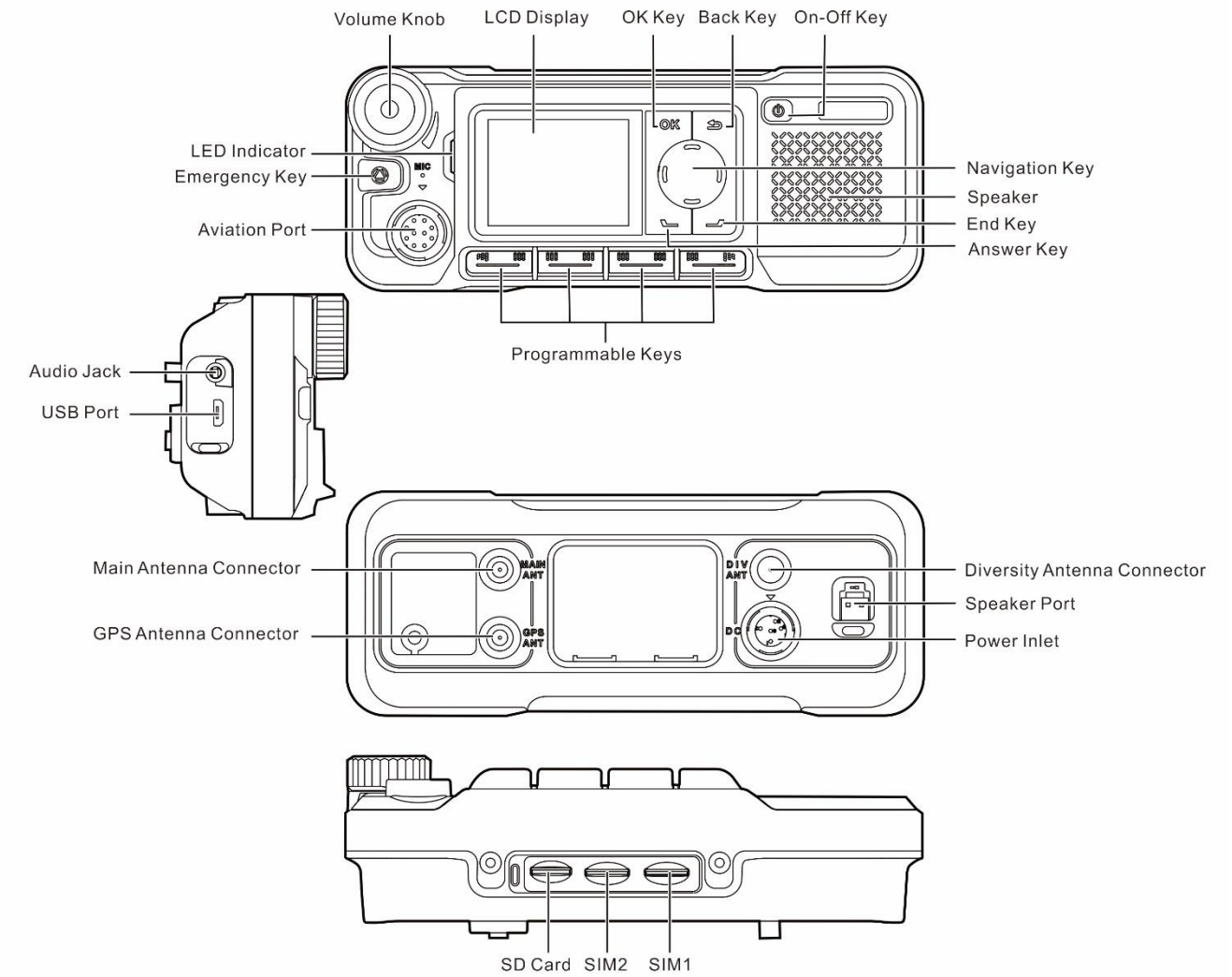

Palm Microphone

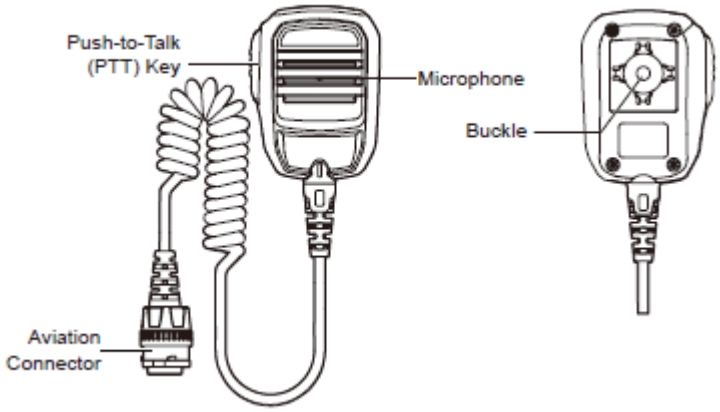

3. Installation

3.1 Precautions

Before installation, read the following guidelines carefully:

- Before installation, ensure that the vehicle power supply has a negative ground with the voltage of 13.6±15% V. If you use 24 V power supply, convert the voltage through a voltage converter.
- Before installation, measure the length of screws protruding from the radio surface. During installation, drill the holes on the vehicle according to the screw length to avoid damaging the vehicle wires or other components.
- Use the antenna and power cord approved by the Company.
- Install the radio with the mounting bracket approved by the Company. Otherwise, the accidental drop of the radio may injure people in the vehicle.
- To facilitate wiring, keep sufficient space at the back of the radio.
- When replacing the fuse for the DC power cord, ensure that the new fuse has the same specification as the old one.
- If any other communication devices such as repeaters are in the vicinity of the radio, keep the antenna of these devices at least 10 meters away from that of the radio.
- Place the GPS antenna away from metal objects.

3.2 Procedure

1. Select a location for installation.
2. Mark the positions for drilling four holes using the bracket.
3. Drill the four holes according to the marks.
4. Use the tapping screws (5 mm x 12 mm) to secure the bracket.

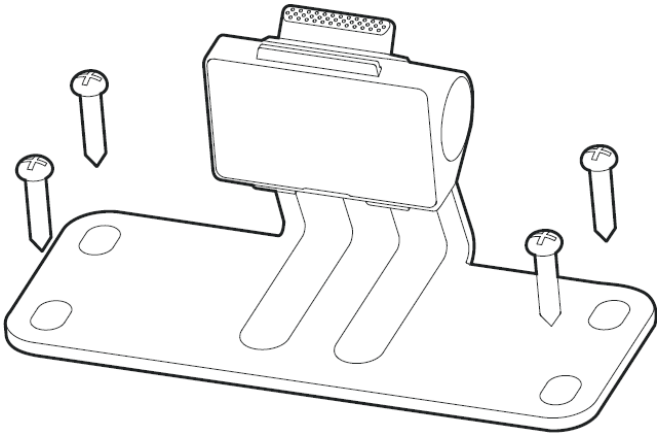

5. Attach the antenna and power cord to the radio.

6. Mount the radio to the fixed bracket.

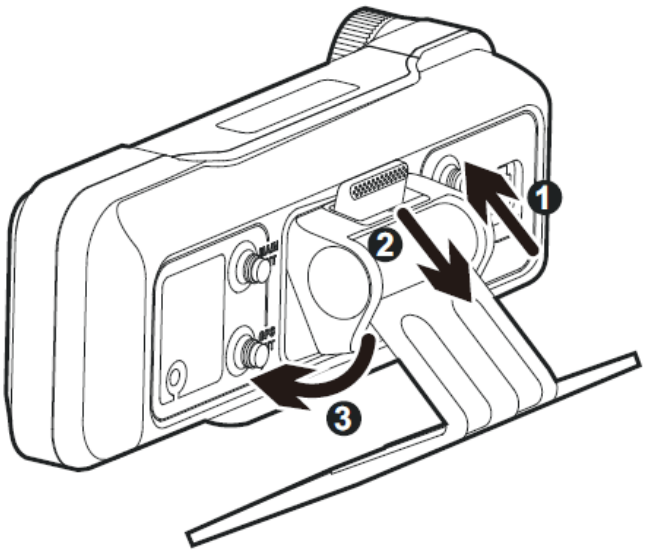

7. Install the microphone hanger in a reachable range, and then use the tapping screws (4 mm x 16 mm) to secure it.

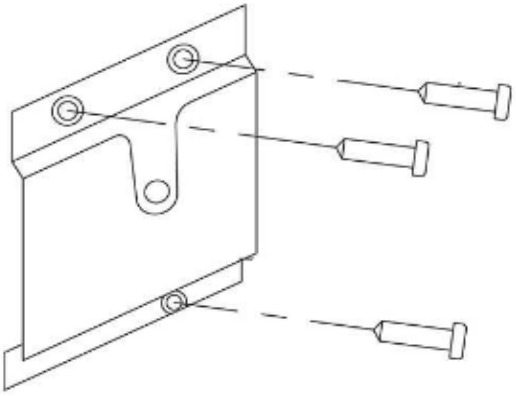

8. Plug the aviation connector on the palm microphone into aviation port on the radio with the triangle index on the palm microphone upwards, and then rotate the connector clockwise to secure it.

9. Place the palm microphone on the hanger.

4. Basic Operations

4.1 Turning On or Off the Radio

Turning On the Radio

- After the vehicle is started, the radio automatically turns on.
- Long press the **On-Off** key for two seconds until the startup screen appears.

Turning Off the Radio

- After the vehicle shuts off, the radio automatically turns off.
- Long press the **On-Off** key for two seconds, press the **Navigation** key to select **Power off**, and then press the **OK** key.

4.2 Restarting the Radio

- Long press the **On-Off** key for two seconds, press the **Navigation** key to select **Reboot**, and then press the **OK** key.
- Long press the **On-Off** key for 15 seconds to forcibly restart the radio.

4.3 Adjusting the Volume

Rotate the **Volume** knob clockwise to increase the volume, or counter-clockwise to decrease the volume.

4.4 Understanding the Screen

4.4.1 Status Indications

4.4.1.1 LCD Icon

Icon	Radio Status
	No SIM card is installed.
E/3G/4G	The 2G/3G/4G cellular network is enabled.
	The radio has registered with the cellular network.
	The radio has not registered with the cellular network.
	The radio is connected to the WLAN network.
	The WLAN hotspot is enabled.

Icon	Radio Status
	The radio operates in Airplane mode.
	An earpiece is connected.
	An accessory is connected.
	The radio operates in Silent mode.
	The BT feature is enabled.
	A BT device is connected.
	The GPS is positioning.
	The memory is insufficient.

4.4.1.2 LED Indicator

Indicator Status	Radio Status
Glows red	● Fatigue driving alarm ● Overspeed alarm

4.4.2 Screen Operations

Turning Off the Screen

Short press the **On-Off** key.

Waking Up the Screen

Press any key.

4.5 Setting Programmable Keys

The radio provides **P1**, **P2**, **P3**, and **P4** as the programmable key. These keys can be programmed to perform specific task. At one press of the programmable key, you can get quick access to radio functions.

1. Press the **Navigation** key to select **Settings**, and then press the **OK** key.
2. Press the **Navigation** key to select **Programmable key**, and then press the **OK** key.
3. Press the **Navigation** key to select **P1**, **P2**, **P3**, or **P4**, and then press the **OK** key.
4. Press the **Navigation** key to select the feature, and then press the **OK** key.

4.6 Using the Dual SIM Cards

You can use two SIM cards, but cannot access data services simultaneously.

4.6.1 Enabling or Disabling the SIM Cards

1. Press the **Navigation** key to select **Settings**, and then press the **OK** key.
2. Press the **Navigation** key to select **SIM cards**, and then press the **OK** key.
3. Press the **Navigation** key to select **SIM slot 1** or **SIM slot 2**, and then press the **OK** key to enable or disable the SIM cards.

4.6.2 Setting the Preferred SIM Card

You can set a SIM card as the default card to access the Internet.

1. Press the **Navigation** key to select **Settings**, and then press the **OK** key.
2. Press the **Navigation** key to select **SIM cards**, and then press the **OK** key.
3. Press the **Navigation** key to select **Preferred SIM for**, and then press the **OK** key to set the preferred SIM card.

4.7 Checking the Radio Information

1. Press the **Navigation** key to select **Settings**, and then press the **OK** key.
2. Press the **Navigation** key to select **About phone**, and then press the **OK** key.

   You can check the radio information such as status, model, and version.

5. PoC Services

You can use Push-to-Talk over Cellular (PoC) services such as one-to-one or one-to-many voice call over the public network.

NOTE

This service is available only when you have installed the PoC application on the radio.

After the radio is connected to a WLAN or cellular network, you can initiate a call through the PoC application.

1. Press the **Navigation** key to select the PoC application, and then press the **OK** key.
2. Select a contact.
3. On the palm microphone, press and hold the **PTT** key, and then speak.
4. Release the **PTT** key.

You can receive a call without any operation.

6. System Settings

Press the **Navigation** key to select **Settings**, press the **OK** key, and then set the following radio parameters.

6.1 WLAN

After the radio connects to WLAN, you can access the Internet.

1. Press the **OK** key twice to enable the WLAN.
2. Press the **Navigation** key to select an available WLAN in the list, and then press the **OK** key.
3. (Optional) If a password is required, enter the password, press the **Navigation** key to select **Done**, and then press the **OK** key.

   The radio saves WLAN information after successful connection.

6.2 BT

The BT feature allows you to transmit voice through wireless earpiece or remote speaker microphone.

6.2.1 Pairing with a BT Accessory

1. Press the **Navigation** key to select **BT**, and then press the **OK** key twice to enable the BT.
2. Press the **Navigation** key to select the device from the **Available devices** list.
3. Press the **OK** key.

   The **Pair with xxx**? dialog box appears. xxx indicates the BT device name.
4. Press the **OK** key again to pair with the device.

6.2.2 Unpairing a BT Accessory

1. Enable the BT.

   For details, see step 1 in 6.2.1 Pairing with a BT .
2. Press the **Navigation** key to select the device from the **Paired devices** list, and then press the **OK** key twice to disconnect from the device.

6.2.3 Modifying a BT Accessory Name

You can rename the BT accessory for easier identification.

1. Press the **Navigation** key to select **Device name**, and then press the **OK** key.
2. Enter the device name.

3. Press the **Navigation** key to select **Done**, and then press the **OK** key.

6.3 Cellular Network

Before connecting to the cellular network, make sure that the Nano SIM card is installed and the cellular data service is activated.

Press the **Navigation** key to select **Cellular networks**, and then press the **OK** key. You can perform the following operations.

6.3.1 Enabling the Cellular Data

Press the **OK** key again.

6.3.2 Checking the Data Usage

1. Press the **Navigation** key to select **Mobile network settings**, and then press the **OK** key.
2. Press the **Navigation** key to select **SIM slot 1** or **SIM slot 2**.
3. Press the **Navigation** key to select **Data usage**, and then press the **OK** key.

   You can keep track of your data usage and avoid exceeding the limit.

6.3.3 Selecting the Network Type

1. Press the **Navigation** key to select **Mobile network settings**, and then press the **OK** key.
2. Press the **Navigation** key to select **SIM slot 1** or **SIM slot 2**.
3. Press the **Navigation** key to select **Preferred network type**, and then press the **OK** key.
4. Press the **Navigation** key to select the network, and then press the **OK** key.

6.3.4 Enabling the Data Roaming

1. Press the **Navigation** key to select **Mobile network settings**, and then press the **OK** key.
2. Press the **Navigation** key to select **SIM slot 1** or **SIM slot 2**.
3. Press the **Navigation** key to select **Data roaming**, and then press the **OK** key.

   You can still use cellular data even when you are outside of your network.

6.4 Airplane Mode

In Airplane mode, your radio automatically disconnects from the cellular network and WLAN. In this case, you cannot use data services.

To enable or disable Airplane mode, press the **Navigation** key to select **More**, and then press the **OK** key twice.

6.5 Hotspot

After the radio connects to the cellular or WLAN network, you can share your internet connection with other devices.

1. Press the **Navigation** key to select **More**, and then press the **OK** key.
2. Press the **Navigation** key to select **Tethering & portable hotspot**, and then press the **OK** key.
3. Press the **OK** key to enable **Portable WLAN hotspot**.
4. Specify **Network name**, **Security**, and **Password**.

6.6 Display

6.6.1 Adjusting the Brightness

You can adjust the brightness to make the screen brighter or dimmer in different situations.

1. Press the **Navigation** key to select **Display**, and then press the **OK** key.
2. Press the **OK** key again to select **Brightness level**.
3. Press the **Navigation** key left or right.

6.6.2 Setting the Sleep Time

You can set the sleep time to allow the radio to automatically turn off its screen if no operation is made within the preset sleep time. It helps save battery power.

1. Press the **Navigation** key to select **Display**, and then press the **OK** key.
2. Press the **Navigation** key to select **Sleep**, and then press the **OK** key.
3. Press the **Navigation** key to select the sleep time, and then press the **OK** key.

6.6.3 Adjusting the Font Size

You can adjust the font size according to your reading habit.

1. Press the **Navigation** key to select **Display**, and then press the **OK** key.
2. Press the **Navigation** key to select **Font size**, and then press the **OK** key.
3. Press the **Navigation** key left or right.

6.7 Sound

6.7.1 Setting the Profile

You can set the profile of the radio according to different scenarios.

1. Press the **Navigation** key to select **Sound**, and then press the **OK** key.
2. Press the **OK** key again.
3. Press the **Navigation** key to select **Silent** or **Ringtone**, and then press the **OK** key.

6.7.2 Selecting the Speaker

You can use the internal or external speaker according to different scenarios.

1. Press the **Navigation** key to select **Sound**, and then press the **OK** key.
2. Press the **Navigation** key to select **Speaker**, and then press the **OK** key.
3. Press the **Navigation** key to select **Internal** or **External**, and then press the **OK** key.

NOTE

If you use an external speaker, ensure that the radio is connected to it.

6.7.3 Enabling the Emergency Broadcast

In case of emergencies, the emergency broadcast allows you to receive the relevant information through the radio.

1. Press the **Navigation** key to select **Sound**, and then press the **OK** key.
2. Press the **Navigation** key to select **Emergency broadcasts**, and then press the **OK** key.
3. Do one of the following:
   - Press the **Navigation** key to select a broadcast type, and then press the **OK** key.

     The options include **Show extreme threats**, **Show severe threats**, and **Show AMBER alerts**.
   - Press the **Navigation** key to select **Turn on notifications**, and then press the **OK** key to enable or disable it.
   - Press the **Navigation** key to select **Alarm reminder**, press the **OK** key, press the **Navigation** key to select the frequency of alarm reminder, and then press the **OK** key again.

6.8 Storage

6.8.1 Checking the Storage Usage

1. Press the **Navigation** key to select **Storage**, and then press the **OK** key.

2. Press the **OK** key to view the internal storage.

6.8.2 Freeing up the Storage Space

1. View the internal storage.

   For details, see 6.8.1 Checking the Storage Usage.

2. Press the **Navigation** key to select **Cached data**, and then press the **OK** key.

   The **Clear cached data?** dialog box appears.

3. Press the **OK** key.

6.9 Memory

Press the **Navigation** key to select **Memory**, and then press the **OK** key.

You can view the occupied memory of running applications.

6.10 Location

The Location feature allows the radio to obtain its location information through WLAN, cellular network, or GPS.

The location-related application such as Hytera HyTalk can access the location data of the radio.

6.10.1 Setting the Location Mode

1. Press the **Navigation** key to select **Location**, and then press the **OK** key.
2. Press the **OK** key to enable **Location**.
3. Press the **Navigation** key to select **Mode**, and then press the **OK** key.
4. Select one of the following location modes:
   - **High accuracy**: The radio uses the combination of GPS, WLAN, and cellular network to determine precise location.
   - **Battery saving**: The radio uses WLAN and cellular network for location, so as to save battery power.
   - **Device only**: The radio uses only GPS for location, without using cellular data.
5. Press the **OK** key.

6.10.2 Improving Location Accuracy

1. Enable **Location**.

   For details, see steps 1–2 6.10.1 Setting the Location Mode.

2. Press the **Navigation** key to select **Scanning**, and then press the **OK** key.
3. Turn **WLAN scanning** or **BT scanning** on or off.
   - **WLAN scanning**: Allow the system applications and service to scan for WLAN network to get better location information.
   - **BT scanning**: Allow system applications and service to scan the nearby BT device and connect to it to get better location information.

6.11 Language

1. Press the **Navigation** key to select **Languages**, and then press the **OK** key.
2. Press the **Navigation** key to select the display language, and then press the **OK** key.

6.12 Factory Data Reset

CAUTION

If the Factory Data Reset feature is activated, all data from the radio such as personal account information and downloaded applications will be permanently erased.

When the radio runs slowly or the applications quit unexpectedly, you can reset the radio to the factory settings to fix the problem.

Press the **Navigation** key to select **Factory data reset**, and then press the **OK** key three times.

6.13 Safe Mode

Some keys on the radio are locked during driving to protect the driver's focus on the road. In case of over speeding or fatigue driving, the radio gives an alarm to ensure a safe trip.

Press the **Navigation** key to select **Safe mode**, press the **OK** key, and then select whether to enable the following features:

- Disable operation while driving: After enabling this feature, you need to set the trigger speed. When the driving speed exceeds the preset trigger speed and lasts for more than one minute, you can use only the **Emergency** key, **Volume** knob, **On-Off** key, **Answer** key, **End** key, and programmable keys.
- Driver fatigue alert: After enabling this feature, you need to set the break time. When you drive continuously for over four hours, you need to have a rest. When the time interval between parking and driving is less than the break time, the radio will initiate an alarm.

- High speed alert: After enabling this feature, you need to set the speed limit. When the average driving speed in one minute exceeds the speed limit, the radio will initiate an alarm.

6.14 Date and Time

The radio can automatically synchronize with the local date, time, and time zone over a cellular network or allows you to manually set them.

6.14.1 Setting the Date, Time, and Time Zone

1. Press the **Navigation** key to select **Date & time**, and then press the **OK** key.
2. Press the **Navigation** key to select **Automatic date & time** or **Automatic time zone**, and then do one of the following:

Method	Operation
Enable the radio to update the date, time, and time zone automatically	Press the **OK** key to enable the option.
Set the date, time, and time zone manually	3. Press the **OK** key to disable the option. 4. Press the **Navigation** key to select **Set date**, **Set time**, or **Select time zone,** and then press the **OK** key. 5. Specify the date, time, or time zone.

6.14.2 Setting the Time Format

You can set the time format to 12-hour or 24-hour.

1. Press the **Navigation** key to select **Date & time**, and then press the **OK** key.
2. Press the **Navigation** key to select **Use 24-hour format**, and then press the **OK** key to enable the feature.

   The radio uses the 24-hour format. Otherwise, the radio uses the 12-hour format.

6.15 Upgrade

CAUTION

- Do not upgrade the radio system with unauthorized software to avoid radio failure, data loss, or potential security problems.
- Be sure to back up your data before upgrade.

- Ensure that the memory space is sufficient before upgrade.
- Before upgrade, ensure that the radio is connected to the WLAN or cellular network. To save data traffic, it is recommended to download the upgrade package through WLAN.
- During upgrade, the radio cannot provide any service. After the upgrade is complete, the radio will automatically restart.

When a new firmware version is available, you can upgrade the system in one of the following ways:

- Automatic upgrade

  The Smart MDM server automatically upgrades the system.

- Manual upgrade

  - You will receive the upgrade notification from the Smart MDM server.
  - Press the **Navigation** key to select **System upgrade**, press the **OK** key, and then follow the on-screen instructions to download and install the upgrade package.

7. Applications

7.1 Installing an Application

7.1.1 Through the APP Center

1. Connect the radio to the cellular or WLAN network.
2. Press the **Navigation** key to select **APPCenter**, and then press the **OK** key.
3. Press the **Navigation** key to select the application, and then press the **OK** key.
4. Upon downloading completion, press the **OK** key.

7.1.2 Through the Android Debug Bridge

1. Install the Android Debug Bridge on the PC.
2. Connect the radio to the PC with the data cable.
3. On the PC, press the **Win** + **R** key combination to open the **Run** dialog box.
4. Enter "cmd", and then press **Enter** to open the command prompt window.
5. Run the `adb install -r D:\xxx.apk` command.

   "D:\xxx.apk" indicates the path of the installation package.

7.2 Uninstalling an Application

If you no longer use an application, you can uninstall it to release storage and improve radio performance.

1. Press the **Navigation** key to select **Settings**, and then press the **OK** key.
2. Press the **Navigation** key to select **Apps**, and then press the **OK** key.
3. Press the **Navigation** key to select the application, and then press the **OK** key.
4. Press the **Navigation** key to select **Uninstall**, and then press the **OK** key.

7.3 Forcibly Stopping an Application

If an application does not respond for a long while, you can forcibly stop this application.

1. Enter the application settings interface.

   For details, see steps 1–3 in 7.2 Uninstalling an Application.

2. Press the **Navigation** key to select **Force stop**, and then press the **OK** key.

7.4 Clearing the Data or Cache

You can clear the configuration information or temporarily cached data when there is insufficient storage or the application runs slowly.

1. Enter the application settings interface.

   For details, see steps 1–3 in 7.2 Uninstalling an Application.

2. Press the **Navigation** key to select **Storage**, and then press the **OK** key.

3. Do either of the following:

   - To clear the data, press the **OK** key twice.
   - To clear the cache, press the **Navigation** key to select **Clear cache**, and then press the **OK** key.

7.5 Setting the Application Permissions

You can grant permission to the application for accessing certain functions of the radio, so as to protect your data and privacy.

1. Enter the application settings interface.

   For details, see steps 1–3 in 7.2 Uninstalling an Application.

2. Press the **Navigation** key to select **Permissions**, and then press the **OK** key.

3. Press the **OK** key to enable or disable the permissions.

8. Sound Recorder

The SoundRecorder application allows you to record voice at any time during your work time or daily life.

8.1 Recording an Audio File

1. Press the **Navigation** key to select **SoundRecorder**, and then press the **OK** key.
2. Press the **OK** key to start recording.
3. Press the **OK** key again to finish recording.

8.2 Managing an Audio File

1. Press the **Navigation** key to select **SoundRecorder**, and then press the **OK** key.
2. Press the **Navigation** key to enter the **File** tab, and then press the **Navigation** key to select the audio file.
3. Press the **OK** key, and then do one of the following:
   - Press the **OK** key again to play the audio.
   - Press the **Navigation** key to select **Share via BT**, and then press the **OK** key to share the audio file through the BT if a BT device is connected.
   - Press the **Navigation** key to select **View details**, and then press the **OK** key to view the audio details, such as recording time, duration, file size, and storage path.
   - Press the **Navigation** key to select **Delete**, and then press the **OK** key twice to delete the audio file.

9. Camera

After the radio is connected to the external camera, the Camera application allows you to shoot photos and videos.

9.1 Taking a Photo

1. Press the **Navigation** key to select **Other Apps**, and then press the **OK** key.
2. Press the **Navigation** key to select **Camera**, and then press the **OK** key.
3. Press the **OK** key to take the photo.

9.2 Recording a Video

1. Enter the camera.

   For details, see steps 1–2 in 9.1 Taking a Photo.

2. Press the **Navigation** key to select , and then press the **OK** key to start recording video.
3. Press the **OK** key again to finish recording.

9.3 Viewing a Photo or Video

1. Enter the camera.

   For details, see steps 1–2 in 9.1 Taking a Photo.

2. Press the **Navigation** key to select , and then press the **OK** key to view photos or videos.

10. Gallery

The Gallery application allows you to manage photos and videos.

Press the **Navigation** key to select **Other Apps**, and then press the **OK** key twice to enter the gallery. You can perform the following operations.

10.1 Photos

10.1.1 Viewing a Photo

1. Press the **Navigation** key to select the photo, and then press the **OK** key.
2. Press the **OK** key again to view the photo.
3. Press the **OK** key twice to zoom out the photo.

10.1.2 Managing Photos

1. Select photos.
   - Single photo
     - i. Press the **Navigation** key to select the photo, and then press the **OK** key.
     - ii. Press the **Navigation** key to select **Select**, and then press the **OK** key twice.
   - All photos
     - i. Press the **Navigation** key to select the photo, and then press the **OK** key.
     - ii. Press the **Navigation** key to select **Select**, and then press the **OK** key twice.
     - iii. Press the **Navigation** key to select **Select all**, and then press the **OK** key twice.
2. Do any of the following:

If you want to…	Then…
Copy or move the photo(s) to SD card if a SD card is installed	Press the **Navigation** key to select **Copy to SD card** or **Move to SD card**, and then press the **OK** key.
Share the photo(s) through the BT if a BT device is connected	3. Press the **Navigation** key to select **Share via BT**, and then press the **OK** key. 4. Press the **Navigation** key to select the paired device, and then press the **OK** key.

If you want to…	Then…
View the photo details, such as type, time, resolution, file size, and storage path	Press the **Navigation** key to select **View details**, and then press the **OK** key.
Delete the photo(s)	Press the **Navigation** key to select **Delete**, and then press the **OK** key twice.

10.2 Videos

10.2.1 Playing a Video

1. Press the **Navigation** key to select **Videos**.
2. Press the **Navigation** key to select the video, and then press the **OK** key.
3. Press the **OK** key three times to play the video

10.2.2 Managing Videos

1. Select videos.
   - Single video
     - i. Press the **Navigation** key to select the video, and then press the **OK** key.
     - ii. Press the **Navigation** key to select **Select**, and then press the **OK** key twice.
   - All videos
     - i. Press the **Navigation** key to select the video, and then press the **OK** key.
     - ii. Press the **Navigation** key to select **Select**, and then press the **OK** key twice.
     - iii. Press the **Navigation** key to select **Select all**, and then press the **OK** key twice.
2. Do any of the following:

If you want to…	Then…
Copy or move the video(s) to SD card if a SD card is installed	Press the **Navigation** key to select **Copy to SD card** or **Move to SD card**, and then press the **OK** key.
Share the video(s) through the BT if a BT device is connected	3. Press the **Navigation** key to select **Share via BT**, and then press the **OK** key.

If you want to…	Then…
	4. Press the **Navigation** key to select the paired device, and then press the **OK** key.
View the video details, such as type, recording time, duration, resolution, file size, and storage path	Press the **Navigation** key to select **View details**, and then press the **OK** key.
Delete the video(s)	Press the **Navigation** key to select **Delete**, and then press the **OK** key twice.

11. Troubleshooting

Phenomena	Analysis	Solution
The radio cannot be turned on.	The power cord may not be connected.	Reconnect the power cord.
The radio fails to respond to any operation.	Too many applications are running.	Forcibly stop some applications or restart the radio.
	The temperature in the vehicle is too high.	Turn on the air conditioner to reduce the temperature.
The keys do not work normally.	**Disable operation while driving** may be enabled.	Turn off **Disable operation while driving**.
	The keys may fail to function temporarily.	Restart the radio.
	The keys may be damaged.	Contact your dealer or Hytera technicians for maintenance.
The LCD display or LED indicator does not work normally.	The LCD display or LED indicator may fail to function temporarily.	Restart the radio.
	The LCD display or LED indicator may be damaged.	Contact your dealer or Hytera technicians for maintenance.
The radio cannot access the cellular network.	The SIM card may be abnormal or out of service because of unpaid charges.	● Ensure that SIM card functions properly. ● Pay the charges, and then restart the radio. ● If you install two SIM cards, switch to another SIM card.
	The cellular data feature may be not enabled for the SIM card.	Contact the carrier to enable the data connection feature.
	The signal may be weak.	● Ensure that the radio is within the network coverage. ● Ensure that the external antenna is installed and not blocked.

Phenomena	Analysis	Solution
	Both the cellular and WLAN network may be turned on, but the WLAN connection may be unstable.	Turn the WLAN off.
You are unable to hear anyone because of too much noise and hiss.	The signal may be weak.	Ensure that call participants are within the communication range.
	The volume may be low.	Increase the volume.
	The speaker may be blocked or damaged.	Clean the surface of the speaker.
The radio fails to detect the SIM card or SD card.	The SIM card or SD card may be installed improperly.	Remove and reattach the SIM card or SD card.
	The SIM card or SD card may suffer from poor contact caused by dirtied or damaged metal contacts.	Contact your dealer or Hytera technicians for maintenance.
The GPS cannot locate your position.	The radio may be at an unfavorable position. For example, the signal may be blocked by high buildings or frustrated in the underground areas.	● Move to an open and flat area, and try again. ● Ensure that the GPS antenna is installed and not blocked.

If the above solutions cannot fix your problems, or you may have some other queries, contact your dealer for more technical support.

12. Care and Cleaning

To guarantee optimum performance as well as a long service life of the radio, follow the tips below.

12.1 Product Care

- Do not pierce or scrape the radio.
- Keep the radio far away from substances that can corrode the circuitry.
- Close the accessory connector cover when no accessory is in use.

12.2 Product Cleaning

CAUTION

Turn off the radio and remove the battery before cleaning.

- Clean up the dust and fine particles on the radio surface with a clean and dry lint-free cloth or a brush regularly.
- Use neutral cleanser and a non-woven fabric to clean the keys, knobs, and front case after long-time use. Do not use chemical preparations such as stain removers, alcohol, sprays, or oil preparations, so as to avoid surface case damage.
- Make sure that the radio is completely dry before use.

13. Optional Accessories

CAUTION

Use the accessories specified by the Company only. Otherwise, we will not be liable for any loss or damage arising out of use of any unauthorized accessories.

Contact your dealer for the optional accessories used with the radio.

14. Abbreviations

Abbreviation	Full Name
GPS	Global Positioning System
LCD	Liquid-Crystal Display
LED	Light-Emitting Diode
MDM	Mobile Device Management
PC	Personal Computer
PoC	Push-to-Talk Over Cellular
PTT	Push-to-Talk
SD	Secure Digital Memory Card
SIM	Subscriber Identity Module
WLAN	Wireless Local Area Networks

is the trademark or registered trademark of Hytera Communications Corporation Limited.

© 2022 Hytera Communications Corporation Limited. All Rights Reserved.

Address: Hytera Tower, Hi-Tech Industrial Park North, 9108# Beihuan Road, Nanshan District, Shenzhen, People's Republic of China

Postcode: 518057

https://www.hytera.com