1. Product Overview

1.1 Product Layout

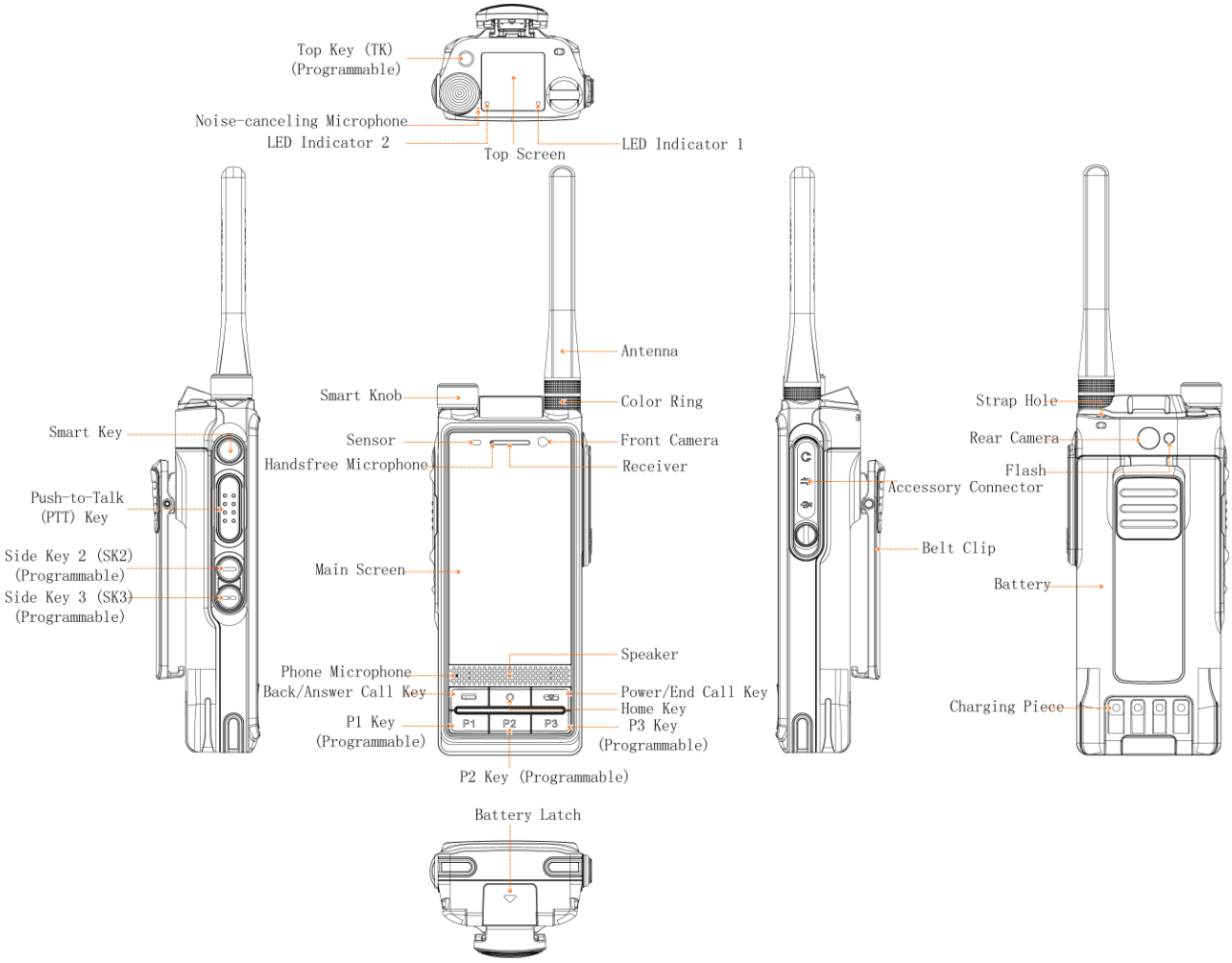

1.2 Programmable Keys

For enhanced convenience, the product provides the programmable keys including **SK2**, **SK3**, **TK**, **P1**, **P2**, and **P3**. The **TK** is programmed with Emergency feature by default (short press: Emergency On; long press: Emergency Off).

To set up other shortcuts, tap , and then go to **Settings** > **Programmable keys**.

2. Before Use

2.1 Attaching the Antenna

CAUTION

Do not hold the terminal by the antenna and swing it. This may affect the antenna performance and shorten the life span of the antenna.

1. (Optional) Place the color ring (for identification purpose) on the antenna connector.
2. Put the antenna on the antenna connector.
3. Rotate the antenna clockwise till hand tight.

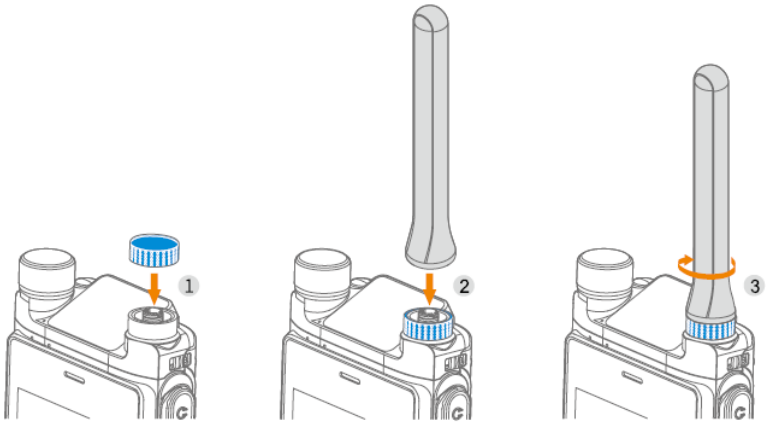

2.2 Installing the Cards

1. Open the card slot cover on the top of the battery compartment.
2. Insert the micro-SD cards and nano-SIM cards into the corresponding slots.
3. Put the card slot cover back in place.

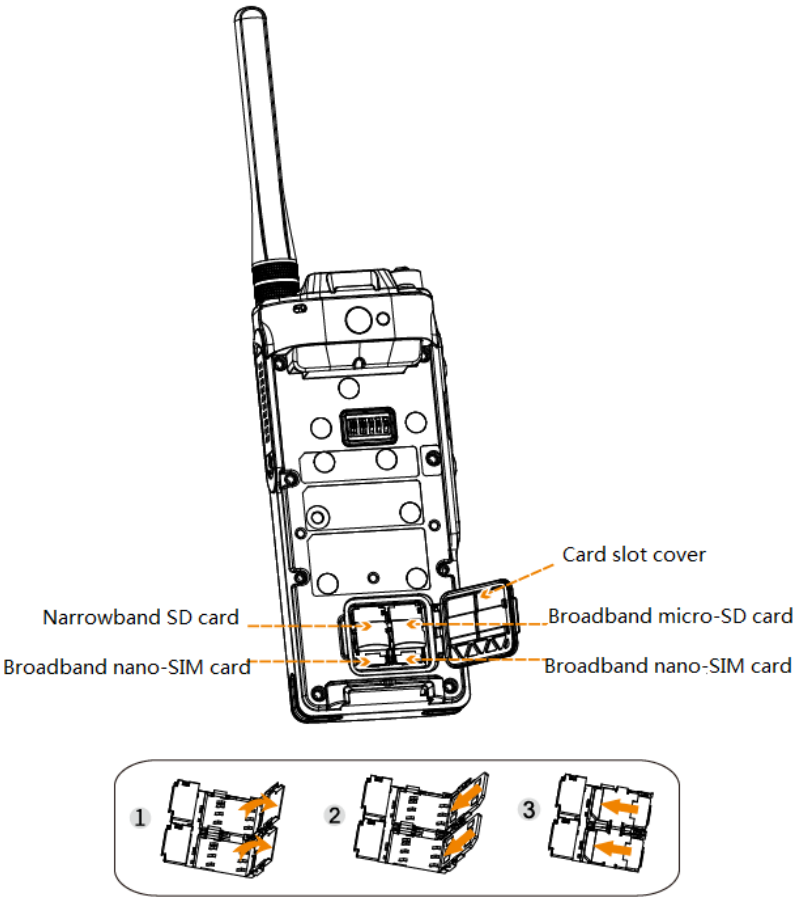
Card slot cover
Narrowband SD card
Broadband micro-SD card
Broadband nano-SIM card
Broadband nano-SIM card
1
2
3

2.3 Attaching the Belt Clip

1. Align the rails on the belt clip with the grooves on the battery.
2. Press the belt clip downwards into place.

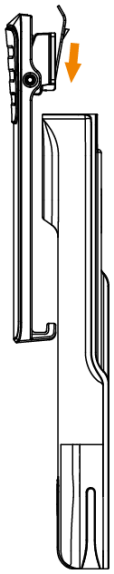

NOTE

To remove the belt clip, press and hold the spring when sliding the belt clip out of the grooves on the battery.

2.4 Attaching the Battery

1. Slide the battery into the slot.
2. Press the battery latch until it is fully fitted into the terminal.

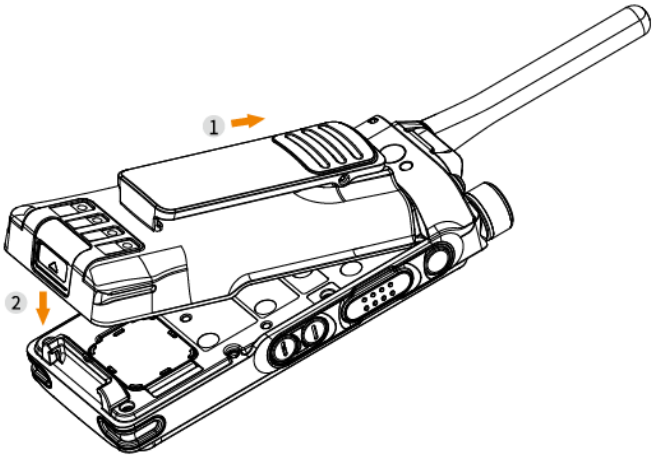

2.5 Charging the Battery

CAUTION

- Use the approved charger to charge the battery.
- Read the *Safety Information Booklet* before charging.
- The remaining lithium-ion battery power is limited to 30% pursuant to the new lithium battery shipment regulation approved by International Air Transport Association (IATA).

Before initial use, fully charge the battery to ensure optimum performance. You can charge the terminal with battery attached or charge the battery alone.

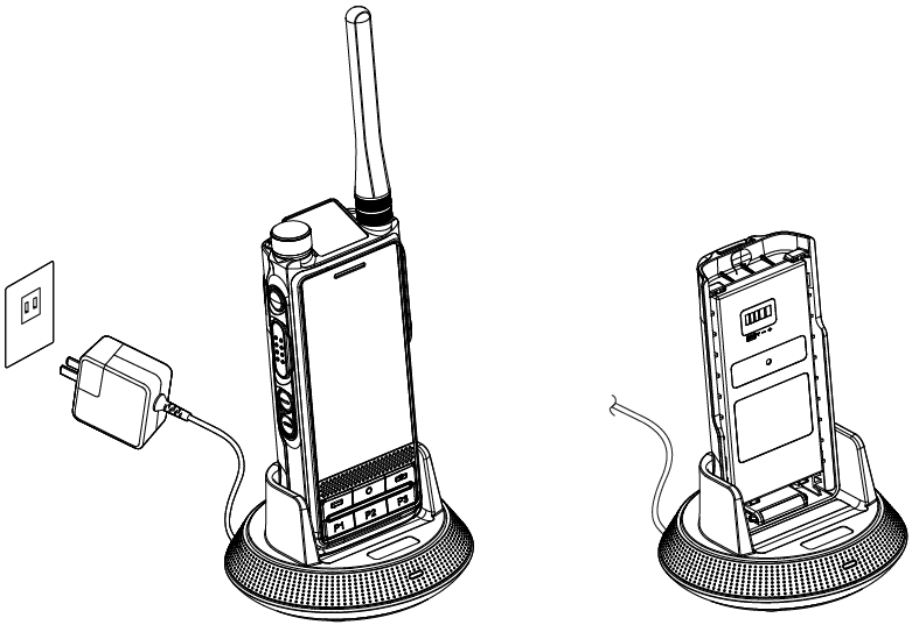

To determine the charging status, check the LED indicator on the charger according to the following table:

LED Indicator	Charging Status
Flashes red slowly	No battery inserted.
Flashes orange slowly	Waiting to charge.
Glows red	Charging.
Glows green	● ⩾ 90% (terminal with battery). ● ⩾ 95% (standalone battery).
Flashes red rapidly	Battery fault.

3. Basic Operations

3.1 Turning the Terminal On or Off

To turn the terminal on, press and hold the **Power/End Call** key until the splash screen appears.

To turn the terminal off, do as follows:

1. Press and hold the **Power/End Call** key until the power-off selection screen appears.

2. Tap **Power Off**, and then tap **OK**.

3.2 Adjusting the Volume

To adjust the volume, directly rotate the **Smart Knob**.

When in a call or enabling an alarm, you can rotate the **Smart Knob** to adjust the call volume or alarm volume.

When playing music, video or recorded files, you can rotate the **Smart Knob** to adjust the media volume.

3.3 Selecting Talk groups

1. Press the **Smart Knob**. Then the terminal prompts on the display.

2. Rotate the knob to select the required talk group.

NOTE

If you do not operate the **Smart Knob** within 5s or if you press it again within 5s, the terminal returns to the volume control state automatically.

3.4 Understanding the Screens

3.4.1 Main Screen and Top Screen

CAUTION

The screens may be damaged or broken if they are hit or scraped by sharp or hard objects.

All care must be taken to protect the screens.

3.4.2 Status Indications

3.4.2.1 LCD Icons

Type	Top Screen	Main Screen	Terminal Status
Network and signal	/	3G/4G	3G/4G cellular network is available.
			The terminal is connected to the WLAN network.
			The number of bars indicates the signal strength of the BB network.

Type	Top Screen	Main Screen	Terminal Status
			The NB network is turned off.
			● In direct mode (DMO): The terminal is in standby state. ● In trunking mode(TMO): The terminal detects no signal.
			The number of bars indicates the signal strength of the NB network.
Call and data services		/	The digit indicates the number of missed calls.
			The digit indicates the number of unread messages.
			An individual/group call is in progress over the NB network.
			A duplex call is in progress.
			A phone call is in progress over the BB network.
Others			The End-to-End Encryption (E2EE) feature is enabled.
			The terminal enables all the encryption features.
			The terminal operates in silent mode.
	/		No SIM card is detected.
			An error occurs to the SD card.

For details on other LCD icons, refer to the *User Manual*.

3.4.2.2 LED Indications

LED Indicator 1

LED Indicator	Terminal Status
Flashes green rapidly	The terminal is being turned on.
Flashes orange slowly	The terminal is registering in TMO.
Flashes green slowly	The terminal is standby after registering.
Glows red	The terminal is transmitting.
Flashes orange rapidly	The calling terminal is establishing a HOOK call in TMO.
Glows green	● The terminal is receiving. ● The channel is busy in DMO.
Glows orange	Call hang time: No voice is being transmitted or received during a call. Within such a period, you can press and hold the **PTT** key and speak.
Flashes red slowly	The terminal is under the low battery threshold. Charge or replace the battery in time.

LED Indicator 2

LED Indicator	Terminal Status
Flashes blue	A BT device is connected.
Flashes red	There is/are unread message(s) or missed call(s).

3.4.3 Widget

The widget shows important information in words and pictures on the main screen. Widget includes NB widget and BB widget. NB widget displays the NB services and is not editable. BB widget displays the shortcut apps, favorite contacts, calendar, and agenda, and allows you to quick access these applications.

To scroll the wedge page, press a widget and swipe upward, or short press the **Smart Key**.

To add or delete a widget, swipe to the bottom of the widget, press "Edit", and then select "Exit" after finishing editing.

3.4.4 Control Center

The control center allows you to adjust the brightness, and turn on or off the handy features.

To access the control center, swipe up from the bottom edge of any screen.

To edit the switches of features displayed on the control center, press .

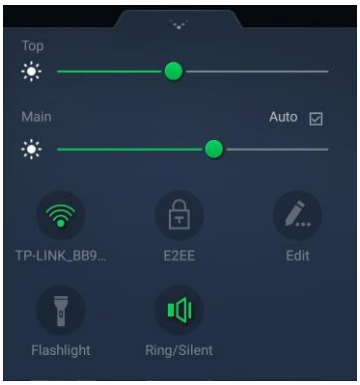

3.4.5 Notification Center

The notification center allows you to view notifications and search for apps, contacts or messages.

To view notifications, swipe down from the top edge of screen, and the tap a notification to view details.

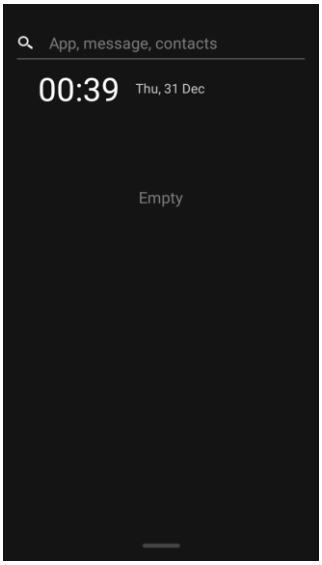

3.4.6 APP Center

To access apps, swipe right from the left edge of the home screen, and then swipe up or down to view all apps.

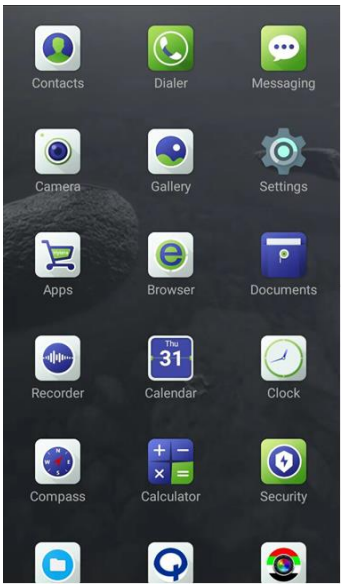

3.4.7 Locking or Unlocking the Screen

When the screen is not in use, you can lock it to avoid unintended operations and increase battery life. When the screen is locked, you can still initiate emergency calls, answer calls, and receive messages and notifications.

To lock or unlock the screen for initial use, do as follows:

- To lock the screen, long press the **Smart Key** to put the screen to sleep.
- To unlock the screen, short press the **Smart Key** or **Home** key to wake up the screen, and then swipe upward, enter the right password or draw the right unlock pattern.

To set the lockable keys and lock patterns, tap , and then go to **General** > **Lock screen.**

3.5 Switching Apps

When multiple apps are running on the terminal, press twice the **Home** key, and then select the app you want to switch. Tap , and then you can end all the running apps and release the storage space.

3.6 Switching the Operation Mode

The terminal can operate in NB & BB mode or NB mode. Upon power-on, the terminal operates in NB & BB mode by default.

In NB&BB mode, both the top screen and main screen are on. The terminal can access both private and public network services.

In NB mode, only the top screen is on. The terminal accesses only private network services. The NB mode includes DMO and TMO.

To switch the specific NB mode, tap , go to **PMR** > **Work Mode**, and then tap **TMO** or **DMO**.

To switch to NB mode, long press the **Power/End call** key, and then tap **Broadband Off.**

To switch to NB & BB mode, long press the **Power/End Call** key, and then tap **Broadband On**.

This equipment complies with radiation exposure limits set forth for an controlled environment. This equipment should be installed and operated with minimum distance 0mm between the radiator and your body. This transmitter must not be co-located or operating in conjunction with any other antenna or transmitter.

4. Call Services

4.1 Private Network Call

4.1.1 Group call

Initiating a Group Call

You can make a group call through one of the following ways:

- Preset Contact
  1. Press the **Smart Knob**.
  2. Rotate the knob to select the required talk group.
  3. Press and hold the **PTT** key.
- Contact List
  1. Tap > **Manage**, and then select the required folder.
  2. In the folder, tap next to the required group contact to set it as the selected group.
  3. Press and hold the **PTT** key.

Receiving a Group Call

When a group call is incoming, it will be established automatically, and you can listen to it without any operation.

Ending a Group Call

A group call ends when the calling party taps or presses the **Power/End Call** key.

4.1.2 Individual Call

Initiating an Individual Call

In TMO, an individual call is a half-duplex or full-duplex call.

In DMO, an individual call is a half-duplex call.

You can make an individual call through one of the following ways:

- Contact List
  1. Tap > **Private**.
  2. Tap the required individual contact.
  3. Press and hold the **PTT** key.
- Manual Dialing
  1. Tap .
  2. Enter the required individual number.
  3. Select "Private".
  4. Press and hold the **PTT** key.

  In the dialing interface, you can also enter the required individual number, and then press and hold the **PTT** key to initiate the call.

NOTE

To enter a number complying with the dialing rules, consult your dealer for more details.

Receiving an Individual Call

In DMO, you can answer an incoming individual call without any operation.

In TMO, the operation varies with the type of the incoming individual call:

- When receiving a call with Hook signaling, the terminal rings and vibrates, and you can press the **Back/Answer call** key, or **PTT** key with the preset time to receive the call.
- When receiving a call with Direct signaling, the call is established automatically.

Answering an Individual Call

- When answering a half-duplex call, press the **PTT** key, and then speak into the microphone.
- When answering a full-duplex call, directly speak into the microphone.

Ending an Individual Call

An individual call ends when the calling or called party taps or presses the **Power/End Call** key.

4.1.3 Emergency Call

In case of an emergency, you can initiate an emergency call to ask for help from other personnel or the control center. An emergency call has the highest priority and can disrupt other calls with lower priority.

To initiate an emergency call, do one of the following:

- In DMO, press the preprogrammed **Emergency On** key to initiate an emergency call to the default group.
- In TMO, press the preprogrammed **Emergency On** key to initiate an emergency call to the emergency contact preset by your dealer.

The emergency call ends when the calling party presses the preprogrammed **Emergency Off** key.

4.2 Public Network Call (Phone Call)

4.2.1 Initiating a Phone Call

You can make a phone call through one of the following ways:

- Contact List
  1. Tap > **Private**.
  2. Tap the required phone contact.
  3. Tap .
- Manual Dialing
  1. Tap .
  2. Enter the required phone number.
  3. Tap "Phone".

  In the dialing interface, you can also enter the required phone number, and then tap to make the call.

4.2.2 Receiving a Phone Call

When a phone call comes in, tap or press the **Back/Answer Call** key.

4.2.3 Ending a Phone Call

In the calling interface, tap or press the **Power/End Call** key.

4.2.4 Emergency Phone Call

In case of an emergency, you can initiate an emergency phone call within the coverage of the carrier's network without a SIM card.

- When the screen is unlocked, do as follows:
  1. Tap .
  2. Enter the emergency phone number.
  3. Tap "Phone".

- When the screen is locked with password or pattern, do as follows:

  1. Tap and drag it to the lateral oblique direction.

  2. Tap "Emergency" and enter the emergency phone number.

  3. Tap .

5. Message Services

The Message feature allows you to exchange the text messages, status messages and multimedia messages (MMS) with other terminals through .

- Status Message (TMO only): frequently used messages predefined by your dealer and not editable. The terminal sends status message over the NB network to a private network number.
- MMS: contains photos, audio, video or other information of multimedia format. The terminal sends MMS through the wireless network or BB network to a public network number.

5.1 Sending Messages

1. Tap and then tap in the lower right corner.
2. Tap the **To** text box to enter the name or number of the recipient, or tap + to select a recipient from your Contacts.
3. Tap the **Type message** text box to enter the text.
4. (Optional) Tap + on the left to schedule the message to be sent later automatically or add required attachments.
5. Tap → to send the message.

NOTE

For contacts over private network, you can also add contacts, quick reply texts, and status messages.

For contacts over public network, you can also add contacts, photos, voices, videos, multimedia message, quick reply text, and emojis.

5.2 Managing Messages

1. Tap and then tap a message to be managed.
2. Touch and hold the message text.
3. In the editing interface, do one of following:
   - To copy the message, tap **Copy text**.
   - To forward the message, tap **Forward** and enter a new contact number or tap + to select a new contact.
   - To delete the message, tap **Delete**.

- To add the message to the favorite list, tap **More** > **Favorite**. To view the favorite messages, tap "My favorites".
- To view the message details such as message type and sending time, tap **More** > **View details**.

This device complies with Part 15 of the FCC Rules. Operation is subject to the following two conditions: (1) this device may not cause harmful interference, and (2) this device must accept any interference received, including interference that may cause undesired operation.
changes or modifications not expressly approved by the party responsible for compliance could void the user’ s authority to operate the equipment.
This equipment has been tested and found to comply with the limits for a Class B digital device, pursuant to Part 15 of the FCC Rules. These limits are designed to provide reasonable protection against harmful interference in a residential installation. This equipment generates, uses and can radiate radio frequency energy and, if not installed and used in accordance with the instructions, may cause harmful interference to radio communications. However, there is no guarantee that interference will not occur in a particular installation.
If this equipment does cause harmful interference to radio or television reception, which can be determined by turning the equipment off and on, the user is encouraged to try to correct the interference by one or more of the following measures:
-- Reorient or relocate the receiving antenna.
-- Increase the separation between the equipment and receiver.
-- Connect the equipment into an outlet on a circuit different from that to which the receiver is connected.
-- Consult the dealer or an experienced radio/TV technician for help.

This equipment complies with FCC radiation exposure limits set forth for an controlled environment. This equipment should be installed and operated with minimum distance 10mm between the radiator and your body, operated with minimum distance 25mm between the front to face. This transmitter must not be co-located or operating in conjunction with any other antenna or transmitter.

This equipment complies with FCC radiation exposure limits set forth for an controlled environment. This transmitter must not be co-located or operating in conjunction with any other antenna or transmitter.