VM690 Pro Body Worn Camera
User Manual

Hytera Communications Corporation Limited

Preface

Welcome to the world of Hytera and thank you for purchasing this product. To derive optimum performance from the product, please carefully read this manual before use.

This manual is applicable to the following product:

VM690 Pro Body Worn Camera

Icon Conventions

The instructional icons and their respective meanings are listed below:

NOTE: Indicates references that can further describe the related topics.

CAUTION: Indicates situations that could cause data loss or equipment damage.

WARNING: Indicates situations that could cause minor personal injury.

Copyright Information

Hytera is the trademark or registered trademark of Hytera Communications Corporation Limited (the Company) in PRC and/or other countries or areas. The Company retains the ownership of its trademarks and product names. All other trademarks and/or product names that may be used in this manual are properties of their respective owners.

The product described in this manual may include the Company's computer programs stored in memory or other media. Laws in PRC and/or other countries or areas protect the exclusive rights of the Company with respect to its computer programs. The purchase of this product shall not be deemed to grant, either directly or by implication, any rights to the purchaser regarding the Company's computer programs. Any of the Company's computer programs may not be copied, modified, distributed, decompiled, or reverse-engineered in any manner without the prior written consent of the Company.

Disclaimer

The Company endeavors to achieve the accuracy and completeness of this manual, but no warranty of accuracy or reliability is given. All the specifications and designs are subject to change without notice due to continuous technology development. No part of this manual may be copied, modified, translated, or distributed in any manner without the express written permission of us.

We do not guarantee, for any particular purpose, the accuracy, validity, timeliness, legitimacy or completeness of the Third Party products and contents involved in this manual.

If you have any suggestions or would like to learn more details, please visit our website at: http://www.hytera.com.

EU Regulatory Conformance

As certified by the qualified laboratory, the product is in compliance with the essential requirements and other relevant provisions of the following directives:

- 2006/66/EC
- 2011/65/EU

- 2012/19/EU
- 2014/53/EU

Please note that the above information is applicable to EU countries only.

1. Packing List

Please unpack carefully and check that all items listed below are received. If any item is missing or damaged, please contact your dealer.

Item	Qty.	Item	Qty.
Body Worn Camera	1	Battery	1
Belt Clip	1	USB Data Cable	1
Documentation kit	1	/	/

NOTE

Figures in this manual are only for reference.

2. Product Overview

2.1 Product Layout

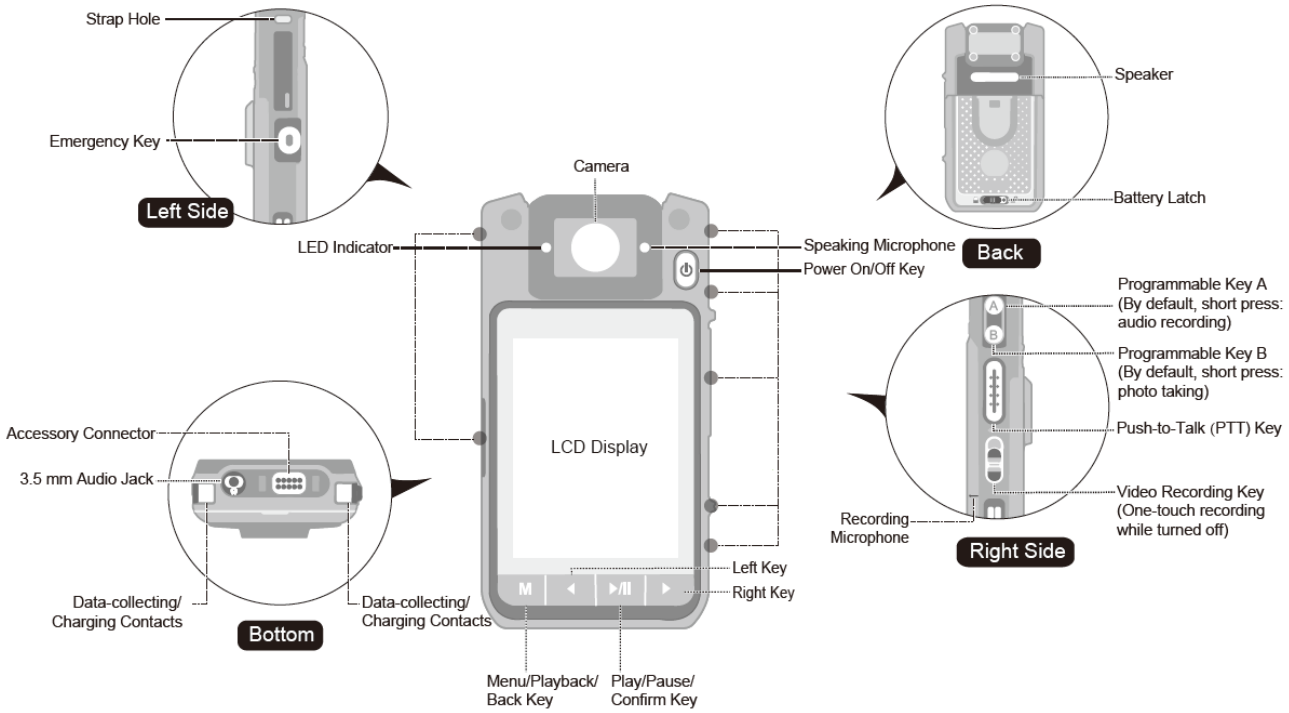

2.2 LCD Icons

Icon	Description
	The WLAN feature is enabled.
	The WLAN Hotpot feature is enabled.
	The Location feature is enabled.
	The BT feature is enabled.
	A BT device is connected.
	The available space of the TF card is lower than 8% of the total storage.
	The TF card is full.
	The earpiece is connected.
	Length of the bar indicates the charging progress. : Charged under low battery. : Fully charged.

Icon	Description
	Length of the bar indicates the battery power. : Low battery. : Full battery.

2.3 LED Indicator

Status	Description
Glows red	● The product is being charged. ● The TF card is out of storage. ● The product is being turned off.
Glows green	● The product is fully charged. ● The product is being turned on.
Flashes red once every five seconds	Low battery. Replace or charge the battery.
Flashes red slowly	The product is recording a video.
Flashes orange slowly	● The product is recording an audio. ● The available space of the TF card is 8% of the total storage.
Flashes red and blue alternatively	The product is pairing with a BT device.

3. Before Use

3.1 Attaching the Battery

To attach the battery, perform the steps shown in the following figure:

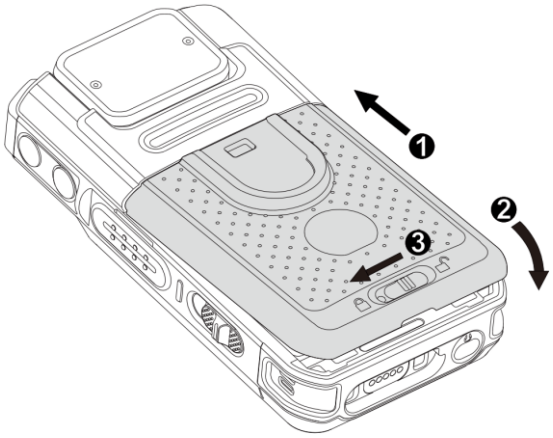

To remove the battery, turn off the product, and then follow the steps in the reverse order.

3.2 Installing the Belt Clip

To install the belt clip, do as shown in the following figure:

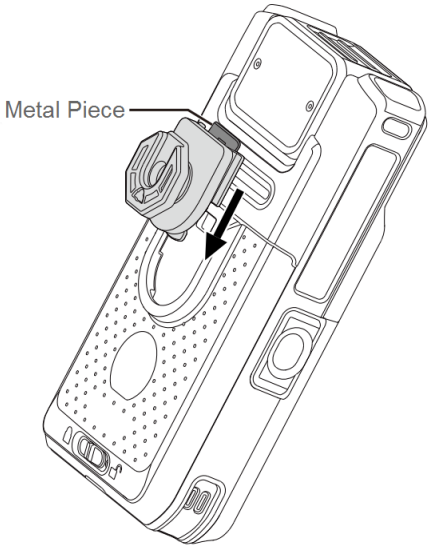

To remove the belt clip, do the following:

1. Remove the battery.

2. Press the mental piece upward during reversing the installing steps.

3.3 Charging the Product

WARNING

Use only the battery approved by the Company. Polarity reverse or use of other batteries may result in explosion and fire hazards.

Charge the product with the USB data cable.

The LED indicator on the product tells its battery status and charging status. For details, see 2.3 LED Indicator.

4. Basic Operations

4.1 Turning On the Product

In power-off mode, long press the **Power On/Off** key.

After being turned on, the product enters the preview mode.

4.2 Turning Off the Product

In power-on mode and non-recoding status, long press the **Power On/Off** key.

4.3 Making the Basic Settings

In the preview mode, long press the **Menu/Playback/Back** key to enter basic settings.

Settings	Description
QrCode	You can use a smartphone to scan the QR code. Then, the dedicated app installed on the smartphone allows you to view, download, and upload files such as videos, photos, and audios to the digital evidence management (DEM). You can also view the real-time video to know how to adjust the field of view. **NOTE** You can also open the QR code by long pressing the **Play/Pause/Confirm** key in the preview mode.
BT	You can turn on or off the BT, set BT pairing, and view the BT device name and MAC address.
WLAN	You can turn on or off the WLAN, view the available WLAN networks, configure the current connected device, and view the IP address. With WLAN enabled, the product works in station (STA) mode, and is able to access devices that work in access point (AP) mode.
WLAN AP	You can turn on or off the WLAN AP, view the hotspot name and password, and view the MAC address and IP address. With WLAN AP enabled, the product works in AP mode, and is able to access devices that work in STA mode.
Location	You can turn on or off the location on the product and enable the GPS data storage through the BWC Manager. With Location enabled, the product will automatically store the GPS files.
Language	You can configure the interface language as English or Traditional Chinese.

Settings		Description
Screen	Brightness	You can adjust the screen brightness manually.
	Screen Off	You can configure the screen-off time. If no operation is made to the product within the screen-off time, the screen will be turned off automatically. ● Press the **Power On/Off** key to turn off the screen, or wait for the screen-off time to turn off the screen automatically. ● Press any key other than the **PTT** key to wake up the screen.
	Sleep Mode	With this feature enabled, if no operation is made within the preset time, the product will enter sleep mode for saving battery power. To wake up the product from sleep mode, press the **Power On/Off** key.
Volume		You can adjust the volume for the key tone, alert tone, video playback and audio playback.
Silent Mode		With this feature enabled, no audible and visual indication are given, and the display brightness is at the lowest level.
Anti-flicker		With this feature enabled, flickers on the screen can be fixed.
Strike		With this feature enabled, after rapid motion or strike is detected, the product automatically starts recording.
MGS		With this feature enabled, the product will take clearer images and more stable videos.
About		You can view information such as the device name, device ID, SN, storage space, processor type and version type.

NOTE

The product supports full-color night vision mode. This feature is automatically enabled without any settings.

4.4 Recording Videos

Prerequisites

Before video recording, you can use the BWC Manager to set parameters or functions such as video resolution, video quality, pre-recording time, post-recording time, watermark, video storage segment, AES256 encryption, and loop video recording. For more details of functions, see the following table:

Function	Description
Pre-event recording	The product automatically captures the video for a preset amount of time before you actually toggles the key downwards to start recording. This ensures you never miss anything important.
Post-event recording	The product automatically continues recording for a preset amount of time after the recording is manually stopped. This ensures you never miss anything important.
Video storage segment	During video recording, if the recording time exceeds the specified segment time, the video will be stored as multiple files. For example, the segment time is set as five minutes, the video recording time is ten minutes, and then the video will stored as two files.
Loop video recording	With this feature enabled, the product automatically deletes the earliest video files to release storage when the TF card is full.
Strike recording	When the product detects the sudden strike, impact, or drop, it automatically starts recording. You can set the feature according to 4.3 Making the Basic Settings.

Procedure

- One-touch recording while turned off
  a. In power-off mode, toggle the **Video Recording** key downwards.

     The product is turned on and starts recording, and the screen displays the recording time.

  b. To finish the recording, toggle the **Video Recording** key upwards.
- Normal recording
  a. In power-on mode, toggle the **Video Recording** key downwards or press the **Emergency** key.

     The product starts recording, and the screen displays the recording time.

  b. To finish the recording, toggle the **Video Recording** key upwards or long press the **Emergency** key.
- Strike recording
  a. Turn on the strike recording feature according to 4.3 Making the Basic Settings.

     After rapid motion or strike is detected, the product automatically starts recording with recording time on the screen.

  b. To finish the recording, toggle the **Video Recording** key downwards and then upwards.

4.5 Recording Audios

Prerequisites

Before audio recording, you can enable the AES256 encryption through the BWC Manager.

Procedure

1. In the preview mode, press **Programmable Key A** to start audio recording.
2. To finish the recording, press **Programmable Key A**.

4.6 Taking Photos

Prerequisites

Before photo taking, you can set the parameters or functions such as photo resolution, photo quality, watermark, and AES256 encryption through the BWC Manager.

Procedure

In the preview mode, press **Programmable Key B** to take a photo.

4.7 Capturing Photos During Video Recording

Prerequisites

Before photo capture, you can set the parameters or functions such as photo resolution, photo quality, watermark, and AES256 encryption through the BWC Manager.

Procedure

During video recording, press **Programmable Key B** to capture a photo.

4.8 Playing Back Videos/Audios/Photos

The following takes video playback as an example.

1. In the preview mode, press the **Menu/Playback/Back** key to enter the password authentication panel.
2. To enter the password (initial password: 000000), do the following:
   a. Press the **Left** or **Right** key to select the format (four formats in total, including numbers, special characters, or uppercase or lowercase letters), and then press the **Play/Pause/Confirm** key.

b. Press the **Left** or **Right** key to select from numbers, special characters, or uppercase or lowercase letters, and then press the **Play/Pause/Confirm** key.

NOTE

If you enter the incorrect password, do either of the following:

- To delete the last number, special character, or letter, press the **Menu/Playback/Back** key.
- To delete all password, long press the **Menu/Playback/Back** key.

3. Press the **Left** or **Right** key to select **Video**, and then press the **Play/Pause/Confirm** key.
4. Press the **Left** or **Right** key to select a video, and then press the **Play/Pause/Confirm** key to play back the video.
5. During playback, do any of the following:

If You Want To…	Then…
Pause the video	Press the **Play/Pause/Confirm** key.
Fast-forward the video	Press the **Right** key to fast-forward the video. You can press the **Right** key multiple times to select 2x, 4x, 6x, 8x, 16x, 24x, or 32x fast-forwarding speed.
Rewind the video	Press the **Left** key to rewind the video. You can press the **Left** key multiple times to select 2x, 4x, 6x, 8x, 16x, 24x, or 32x rewinding speed.
Play the previous video	a. Press the **Play/Pause/Confirm** key to pause the video. b. Press the **Left** key.
Play the next video	a. Press the **Play/Pause/Confirm** key to pause the video. b. Press the **Right** key.

4.9 Adjusting the Volume

You can adjust the volume by either of the following:

- In the preview mode, press the **Left** key to increase the volume or the **Right** key to decrease the volume.
- Adjust the volume according to 4.3 Making the Basic Settings.

4.10 Transmitting the Voice

Prerequisites

You have connected the product to a portable radio through the USB data cable.

Procedure

1. Press and hold the **PTT** key, and then speak into the microphone.
2. After speaking, release the **PTT** key.

5. Data Collection

You can collect the data such as videos, photos, and audios from the product by any of the following:

- Though the app installed on the smartphone. You can connect the product to the smartphone through the WLAN Direct. For details, see the related *User Manual*.
- Through the desktop docking station of the Company (optional). For details, see the related *User Manual*.
- Through the multi-unit charger of the Company (optional). For details, see the related *User Manual*.

6. Troubleshooting

Phenomena	Analysis	Solution
The product cannot be turned on.	The battery may be improperly attached.	Remove the battery, and then attach it again.
	The battery may run out.	Charge or replace the battery.
	The battery contacts may be dirtied or damaged, leading to a poor contact.	Clean the battery contacts.
The volume is low during a call when connected to the portable radio.	The speaking microphone or the speaker may be blocked or damaged.	Clean the speaking microphone or the speaker.
The volume is low during video or audio playback.	The recording microphone is blocked or damaged.	Clean the recording microphone.
The product cannot record videos or audios.	The TF card is full.	a. Use the BWC Manager to switch the product into disk mode. b. Export all data. c. Clear the TF card.
	The TF card is damaged.	Change the TF card.
The product cannot take photos.	The TF card is full.	a. Use the BWC Manager to switch the product into disk mode. b. Export all data. c. Clear the TF card.
	There are already 300 photos in the product.	a. Use the BWC Manager to switch the product into disk mode. b. Export all photos. c. Clear the TF card.
	The TF card is damaged	Change the TF card.
The exported audios and videos cannot be played back by normal players; or the exported	The product is enabled with file encryption feature through the BWC Manager. The audio,	Play the audios and videos or view the photos through the applications provided by the Company.

Phenomena	Analysis	Solution
photos cannot be viewed by normal applications.	video and photo files are encrypted.	
The product cannot make pre-event recording or post-event recording.	This feature is not enabled.	Enable the feature through the BWC Manager.
The product gives no alert tone; the indicator does not light up; and the screen is dim.	The Silent Mode is enabled.	Disable the Silent Mode.

If the above solutions cannot solve your problems, or you may have some other queries, please contact us or your local dealer for more technical support.

7. Care and Cleaning

To guarantee optimum performance as well as a long service life of the product, please follow the tips below.

Product Care

- Do not pierce or scrape the product.
- Keep the product away from substances that can corrode the circuitry.

Product Cleaning

CAUTION

- Turn off the product before cleaning.
- Make sure the product is completely dry before use.

- Clean up the dust and fine particles on the product's surface with a clean and dry lint-free cloth or a brush regularly.
- Use neutral cleanser and a non-woven fabric to clean the keys and surface after long-time use. Do not use chemical preparations such as stain removers, alcohol, sprays or oil preparations, so as to avoid surface damage.

8. Optional Accessories

CAUTION

Use the accessories specified by the Company only; otherwise, we shall not be liable for any losses or damages arising out of the use of any unauthorized accessories.

Contact your local dealer for the optional accessories of the product.

9. Appendix—Product Specifications

Item	Description	
Frequency range	WLAN 2.4G	2412–2462MHz
	WLAN 5G	FCC:5150–5250MHz ,5250–5350MHz ,5470−5725 MHz, 5725–5850 MHz IC:5150 –5250MHz ,5250–5350MHz ,5470−5600MHz, 5650–5725MHz, 5725–5850MHz
	BT	2402–2480 MHz
Power	WLAN 2.4G (tolerance: ±2 dBm)	21.80dBm(802.11b/g/n)
	WLAN 5G (tolerance: ±2 dBm)	11.62dBm
	BT	BT:4.12dBm,BLE:3.80dBm

FCC Statement

This device complies with part 15 of the FCC Rules. Operation is subject to the following two conditions: (1)This device may not cause harmful interference, and (2) this device must accept any interference received, including interference that may cau undesired operation.

Any changes or modifications not expressly approved by the party responsible for compliance could void the user's authority to operate the equipment.

This equipment has been tested and found to comply with the limits for a Class B digital device, pursuant to part 15 of the FCC Rules. These limits are designed to provide reasonable protection against harmful interference in a residential installation. This equipment generates, uses and can radiate radio frequency energy and, if not installed and used in accordance with the instructions, may cause harmful interference to radio communications. However, there is no guarantee that interference will not occur in a particular installation. If this equipment does cause harmful interference to radio or television reception, which can be determined by turning the equipment off and on, the user is encouraged to try to correct the interference by one or more of the following measures:
—Reorient or relocate the receiving antenna.
—Increase the separation between the equipment and receiver.
—Connect the equipment into an outlet on a circuit different from that to which the receiver is connected.
—Consult the dealer or an experienced radio/TV technician for help.

ISEDC Statement

The device has been tested and complies with SAR limits, users can obtain Canadian information on RF exposure and compliance

Après examen de ce matériel aux conformité aux limites DAS, et/ou aux limites d'intensité de champ RF, les utilisateurs peuvent sur l'exposition aux radiofréquences et la conformité and compliance d'acquérir les informations correspondantes.

SAR tests are conducted using standard operating positions accepted by the FCC/ISEDC with the device transmitting at its highest certified power level in all tested frequency bands, although the SAR is determined at the highest certified power level, the actual SAR level of the device while operating can be well below the maximum value.
Before a new model device is a available for sale to the public, it must be tested and certified to the FCC/ ISEDC that it does not exceed the exposure limit established by the FCC/ISEDC, Tests for each device are performed in positions and locations (worn on the body)as required by the FCC/ISEDC.
For face-up, 10mm was used for test, this equipment should be installed and operated with minimum distance 10mm.
For body worn operation, this device has been tested and meets the FCC/ISEDC RF exposure guidelines when used with an accessory designated for this product or when used with an accessory that Contains no metal.
Non-compliance with the above restrictions may result in violation of RF exposure guidelines.

Les essais SAR sont effectués à l'aide de positions d'exploitation normalisées acceptées par la FCC/ISEDC avec l'appareil transmettant à son niveau de puissance certifié le plus élevé dans toutes les bandes de fréquences testées, bien que le SAR soit déterminé au niveau de puissance certifié le plus élevé, le niveau réel de R-S de l'appareil pendant son fonctionnement peut être bien inférieur à la valeur maximale.
Avant qu'un nouveau dispositif de modèle ne soit disponible à la vente au public, il doit être testé et certifié à la FCC/ISEDC qu'il ne dépasse pas la limite d'exposition établie par la FCC/ISEDC, les tests pour chaque appareil sont effectués dans des positions et des emplacements (portés sur le corps) comme l'exige la FCC/ ISEDC. Pour le face-vers le haut,10mm a été utilisé pour l'essai, cet équipement doit être installé et actionné avec une distance minimale de 10mm.
Pour le fonctionnement du corps usé, ce dispositif a été testé et répond aux directives d'exposition RF FCC/ISEDC lorsqu'il est utilisé avec un accessoire désigné pour ce produit ou lorsqu'il est utilisé avec un accessoire qui ne contient pas de métal.
Le non-respect des restrictions ci-dessus peut entraîner une violation des lignes directrices sur l'exposition aux RF.

This device complies with Innovation, Science and Economic Development Canada licence-exempt RSS standard (s). Operation is subject to the following two conditions: (1) this device may not cause interference, and (2) this device must accept any interference,in cluding interference that may cause undesired operation of the device.

Le onjunc areil est conforme aux CNR d' l'innovation, la science et le développement économique Canada licables aux areils radio exempts de licence. L'exploitation est autorisée aux deux conditions suivantes: (1) l'areil ne doit pas produire de brouillage, et (2) l'utilisateur de l'appareil doit accepter tout brouillage radioélectrique subi, onj si le brouillage est susceptible d'en compromettre le fonctionnement.

Hytera

is the trademark or registered trademark of Hytera Communications Corporation Limited.

© 2021 Hytera Communications Corporation Limited. All Rights Reserved.

Address: Hytera Tower, Hi-Tech Industrial Park North, 9108# Beihuan Road, Nanshan District, Shenzhen, People's Republic of China

Postcode: 518057

http://www.hytera.com