T E S T R E P O R T
No.: 18-1-0048401T03a

According to:
FCC Regulations
Part 15.209
Part 15.247

ISED-Regulations
RSS-Gen, Issue 5
RSS-247, Issue 2

for

Robert Bosch Car Multimedia

Navigation System with Bluetooth and WLAN
AIVIL12F0

FCC ID: YBN-AIVIL12F0
ISED: 9595A-AIVIL12F0

Laboratory Accreditation and Listings			
DAkkS Deutsche Akkreditierungsstelle D-PL-12047-01-01 Accredited EMC-Test Laboratory	FCC Federal Communications Commission USA MRA US-EU 0003	Industry Canada Reg N.: 3462D-1 Reg. No.: 3462D-2 Reg. No.: 3462D-3	VCI Voluntary Controls for Electromagnetic Emissions Reg. No.: R-2666 C-2914, T-1967, G-301
Wi Fi Alliance AUTHORIZED RF LABORATORY	ctia Authorized™ Test Lab Lab Code: 20011130-00		
accredited according to DIN EN ISO/IEC 17025			

CETECOM GmbH
Laboratory Radio Communications & Electromagnetic Compatibility
Im Teelbruch 116 • 45219 Essen • Germany
Registered in Essen, Germany, Reg. No.: HRB Essen 8984
Tel.: + 49 (0) 20 54 / 95 19-954 • Fax: + 49 (0) 20 54 / 95 19-964
E-mail: info@cetecom.com • Internet: www.cetecom.com

The test results relate only to the individual items which have been tested. This report shall not be reproduced in parts without the written approval of the testing laboratory © Copyright: All rights reserved by CETECOM

Table of contents

1. SUMMARY OF TEST RESULTS ... 3

1.1. Tests measurement overview according of US CFR Title 47, Subpart 15C and Canada RSS-Standards: ... 3
1.2. Attestation: ... 4

2. ADMINISTRATIVE DATA ... 5

2.1. Identification of the testing laboratory ... 5
2.2. Test location ... 5
2.3. Organizational items ... 5
2.4. Applicant's details ... 5
2.5. Manufacturer's details ... 5

3. EQUIPMENT UNDER TEST (EUT) ... 6

3.1. Technical data of main EUT declared by applicant ... 6
3.2. EUT: Type, S/N etc. and short descriptions used in this test report ... 7
3.3. Auxiliary Equipment (AE): Type, S/N etc. and short descriptions ... 7
3.4. EUT set-ups ... 7
3.5. EUT operating modes ... 7

4. DESCRIPTION OF TEST SYSTEM SET-UP'S ... 9

4.1. Test system set-up for AC power-line conducted emission measurements ... 9
4.2. Test system set-up for conducted measurements on antenna port ... 10
4.3. Test system set-up for radiated magnetic field measurements below 30 MHz ... 11
4.4. Test system set-up for radiated electric field measurement 30 MHz to 1 GHz ... 12
4.5. Test system set-up for radiated electric field measurement above 1 GHz ... 13

5. MEASUREMENT RESULTS ... 14

5.1. Duty-Cycle ... 14
5.2. Maximum peak conducted output power ... 16
5.3. General Limit - Radiated field strength emissions below 30 MHz ... 18
5.4. General Limit - Radiated field strength emissions, 30 MHz - 1 GHz ... 20
5.5. General Limit - Radiated emissions, above 1 GHz ... 22
5.6. RF-Parameter - Radiated Band Edge compliance measurements ... 24
5.7. Measurement uncertainties ... 26

6. ABBREVIATIONS USED IN THIS REPORT ... 27

7. ACCREDITATION DETAILS OF CETECOM'S LABORATORIES AND TEST SITES ... 27

8. INSTRUMENTS AND ANCILLARY ... 28

8.1. Test software and firmware of equipment ... 28
8.2. Legend ... 30

9. VERSIONS OF TEST REPORTS (CHANGE HISTORY) ... 31

Table of annex

	Total pages
Annex 1: Test result diagrams (separate document) **CETECOM-TR18-1-0048401T03a-A1**	**14**
Annex 2: External photographs of EUT (separate document) **CETECOM- TR18-1-0048401T01a-A2**	**4**
Annex 3: Please refer to external document "AIVIL12F0_Internal_Pictures" dated 2018-06-04	**9**
Annex 4: Test set-up photographs (separate document) **CETECOM- TR18-1-0048401T01a -A4**	**5**

The listed attachments are an integral part of this report.

1. Summary of test results

The test results apply exclusively to the test samples as presented in this Report. The CETECOM GmbH does not assume responsibility for any conclusions and generalizations taken in conjunction with other specimens or samples of the type of the item presented to tests. Also we refer on special conditions which the applicant should fulfill according §2.927 to §2.948, special focus regarding modification of the equipment and availability of sample equipment for market surveillance tests.

The presented Equipment Under Test (in this report, hereinafter referred as EUT) integrates a Bluetooth©EDR transmitter of pre-certified LS Research module system **AIVIL42P0 (FCC ID: YBNAIVIL42P0 and ISED: 9595A-AIVIL42P0).** Due no modifications on the WIFI and Bluetooth Part of the module only radiated tests have been performed. In addition power verification tests have been performed too. Other implemented wireless technologies are not considered within this test report.

Following test cases have been performed to show compliance with valid Part 15.209/15.247 of the FCC CFR Title 47 Rules, Edition 2017 and ISED RSS-247 Issue 2/RSS-Gen Issue 5 standards.

1.1. Tests measurement overview according of US CFR Title 47, Subpart 15C and Canada RSS-Standards:

Test cases	Port	References & Limits			EUT set-up	EUT opera-ting mode	Result
		FCC Standard	RSS Section	Test Limit			
TX-Mode							
Timing of transmitter (pulsed operation)	Antenna Terminal or enclosure	§15.35	RSS-Gen, Issue 5	--	2	1	Performed for information only
6 dB bandwidth	Antenna terminal (conducted)	§15.247(a)(2)	RSS-247, Chapter 5.2(a) RSS-Gen Issue 5: Chapter 4.6.2	≥ 500 kHz for DTS systems	--	--	Remark1
99% occupied bandwidth	Antenna terminal (conducted)	2.1049(h)	RSS-Gen Issue 4: Chapter 6.7	99% Power bandwidth	--	--	Remark1
Transmitter Peak output power	Antenna terminal (conducted)	§15.247(b)(3)	RSS-247, Chapter 5.4(d)	1 Watt Peak	2	1	passed
Transmitter Peak output power radiated	Enclosure + Inter-connecting cables (radiated)	§15.247(b)(4)	RSS-247, Chapter 5.4(d)	< 4 Watt (EIRP) for antenna with directional gain less 6dBi	--	--	passed (calculated)
Out-Of-Band RF- emissions Band-Edge emissions	Antenna terminal (conducted)	§15.247 (d)	RSS-247, Chapter 5.5	20 dBc	--	--	Remark1
Power spectral density	Antenna terminal (conducted)	§15.247(e)	RSS-247, Chapter 5.2(b)	8dBm in any 3 kHz band	--	--	Remark1

General field strength emissions + restricted bands	Enclosure + Inter-connecting cables (radiated)	§15.247 (d) §15.205 §15.209	RSS-247 Issue 2, Chapter 3.3 RSS-Gen: Issue 5: §8.9 Table 5+6+7	Emissions in restricted bands must meet the general field-strength radiated limits	1	1	passed
AC-Power Lines Conducted Emissions	AC-Power lines	§15.207	RSS-Gen, Issue 5: Chapter 8.8, Table 4	FCC §15.107 class B limits §15.207 limits ISED: Table 3, Chapter 8.8	--	--	n/a

Remark 1) Please refer to separate FCC RF Test Report BTL-FCCP-1-1807C078_BT with FCC-ID: YBN-AIVIL42P0 and ISED Test Report BTL-ISEDR-1-1807C078_BT with ISED 9595A-AIVIL42P0

2) only worst case mode was tested from reference FCC-ID YBN-AIVIL42P0. For modulations and data rates not tested within this test report please refer to Test Report BTL-FCCP-1-1807C078_BT with FCC-ID: YBN-AIVIL42P0 and ISED Test Report BTL-ISEDR-1-1807C078_BT with ISED 9595A-AIVIL42P0

1.2. Attestation:

I declare that all measurements were performed by me or under my supervision and that all measurements have been performed and are correct to my best knowledge and belief to Industry Canada standards. All requirements as shown in above table are met in accordance with enumerated standards.

Digital signiert von: rachid.acharkaoui@cetecom.com
Name: CN = rachid.acharkaoui@cetecom.com
Datum: 2018.07.27 12:25:30 +01'00'

.....
Dipl.-Ing. Rachid Acharkaoui
Responsible for test section

Ninovic Perez
2018.07.27 10:47:52 +01'00'

.....
Dipl.-Ing Ninovic Perez
Responsible for test report

2. Administrative Data

2.1. Identification of the testing laboratory

Company name:	CETECOM GmbH
Address:	Im Teelbruch 116 45219 Essen - Kettwig Germany
Responsible for testing laboratory:	Dipl.-Ing. Niels Jeß
Deputy:	Dipl.-Ing. Rachid Acharkoui

2.2. Test location

2.2.1. Test laboratory “CTC”

Company name:	see chapter 2.1. Identification of the testing laboratory

2.3. Organizational items

Responsible for test report: project leader:	Dipl.-Ing N. Perez
Receipt of EUT:	2018-06-12
Date(s) of test:	2018-06-12 - 2018-07-18
Date of report:	2018-07-20

2.4. Applicant’s details

Applicant’s name:	Robert Bosch Car Multimedia
Address:	Robert-Bosch-Str. 200 31139 Hildesheim Germany
Contact person:	Mr. Salvatore Miraglia

2.5. Manufacturer’s details

Manufacturer’s name:	see applicant's details
Address:	see applicant's details

3. Equipment under test (EUT)

3.1. Technical data of main EUT declared by applicant

Main function	Navigation System with Bluetooth and WLAN		
Type	AIVIL12F0		
Frequency range (US/Canada -bands)	☒ 2402 MHz (Channel 1 or 37) to 2480 MHz (Channel 39)		
Type of modulation	GFSK		
Number of channels (USA/Canada -bands)	1 - 79		
Antenna Type	☒ Integrated ☐ External, no RF- connector ☐ External, separate RF-connector		
Antenna Gain	1.0dBi		
Max Peak Power *1) 1Mbps 2Mbps 3Mbps	RMS power measured -4.17dBm -4.35dBm -4.80dBm		
EIRP Power (calculated) 1Mbps 2Mbps 3Mbps	EIRP power (calculated) -4.17dBm +1dBi= -3.17dBm -4.35dBm +1dBi= -3.35dBm -4.80dBm +1dBi= -3.80dBm		
Installed options	☒ 802.11 b/g/n (not tested within this report) ☒ 802.11 a/n/ac (not tested within this report) ☐ LTE FDD Band 2, 4, 5, 12 (not tested within this report) ☐ UMTS Band 2, 5 (not tested within this report) ☐ GSM 850/1900 (not tested within this report)		
Power supply	☐ DC power Range: 2.3 V to 3.3 V (as specified by applicant) ☒ 13.5 VDC		
Special EMI components	--		
Does EUT contain devices susceptible to magnetic fields, e.g. Hall elements, electrodynamics microphones, etc.?	☐ yes ☒ no		
EUT sample type	☐ Production	☒ Pre-Production	☐ Engineering
FCC label attached	☐ yes	☒ no	

Remark: *1) Power values for 1Mbps and 2Mbps are taking from Test Report BTL-FCCP-1-1807C078_BT with FCC-ID: YBN-AIVIL42P0 and ISED Test Report BTL-ISEDR-1-1807C078_BT with ISED 9595A-AIVIL42P0

3.2. EUT: Type, S/N etc. and short descriptions used in this test report

Short descrip-tion*)	EUT	Type	S/N serial number	HW hardware status	SW software status
EUT A	AIVIL12F0	Navigation System with Bluetooth and WLAN	0007647	001	X317 (0539)
EUT B	AIVIL12F0	Navigation System with Bluetooth and WLAN	0007625	001	X317 (0539)

*) EUT short description is used to simplify the identification of the EUT in this test report.

3.3. Auxiliary Equipment (AE): Type, S/N etc. and short descriptions

AE short descrip-tion *)	Auxiliary Equipment	Type	S/N serial number	HW hardware status	SW software status
AE 1	Harness	Test Cable	--	--	--

*) AE short description is used to simplify the identification of the auxiliary equipment in this test report.

3.4. EUT set-ups

EUT set-up no.*)	Combination of EUT and AE	Remarks
set. 1	EUT A + AE 1	Radiated measurement set-up
set. 2	EUT B + AE 1	Conducted measurement set-up

*) EUT set-up no. is used to simplify the identification of the EUT set-up in this test report.

3.5. EUT operating modes

EUT operating mode no.*1)	Description of operating modes	Additional information
op. 1	Bluetooth BDR/ EDR Modes TX-Fixed Channel (Modulated)	The EUT was put to **Fixed Channel (Modulated) Continuous transmissions mode**

*1) EUT operating mode no. is used to simplify the test report.
*2) Please refer to document “Instructions_RadioTypeApproval_9_6_2017” dated 2017-06-09 for additional information regarding operating mode setup and output power levels.

The following settings have been done under SW Labtool:

For BT the following commands were used in Labtool

80 // reset
114 2 //PowerClass2
116 1 // PowerLevel Automatic off
16 0 0 // PowerLevel 0dBm BDR
12 x // x for BT channel
225 1 15 2 -1 0 // Duty Cycle Mode on, DH5, Paypload pattern PN9, max. possible PayloadLength, Fixed channel

4. Description of test system set-up's

4.1. Test system set-up for AC power-line conducted emission measurements

Specification: ANSI C63.4-2014 chapter 7, ANSI C63.10-2013chapter 6.2

General Description: The radio frequency voltage conducted back into the AC power line in the frequency range 150 kHz to 30 MHz has to be investigated. Compliance should be tested by measuring the radio frequency voltage between each power line and ground at the power terminals in the stated frequency range.
A 50 Ohm / 50 µH line impedance stabilization network (LISN) is used coupling the interface to the measurement equipment. The EUT power input leads are connected through the LISN to the AC-power source. The LISN enclosure is electrically connected to the ground plane. The measuring instrument is connected to the coaxial output of the LISN.
Tabletop devices were set-up on a 80 cm height above reference ground plane, floor standing equipment 10 cm raised above ground plane. Measurements have been performed on each phase line and neutral line of the devices AC-power lines. The EUT was power supplied with 120 V/60 Hz. The EUT was tested in the defined operating mode and installed (connected) to accessory equipment according the general description of use given by the applicant.

Schematic:

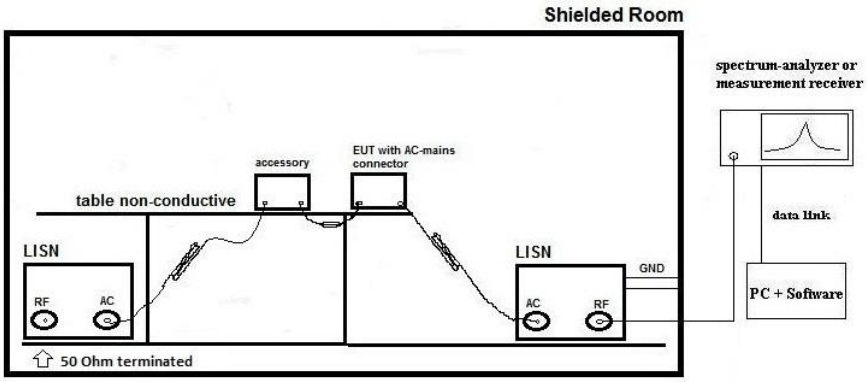

Only schematic view, we refer to figure 6, 7 and 8 of ANSI C63.4-2009 for more details.

Testing method:

Exploratory, preliminary measurements as a first step, determines the worst-case phase line (neutral or phase) as well as the most critical operating mode of the equipment. A complete frequency-sweep with PK-Detector is performed on each current-carrying conductor.

Final testing for power phases and critical frequencies (Margin to AV- or QP limit lower than 3 dB) as a second step includes measurements with receivers detector set to Quasi-Peak and Average.

Formula:

$V_C = V_R + C_L$ (1)

$M = L_T - V_C$ (2)

V_C = measured Voltage –corrected value
V_R = Receiver reading
C_L = Cable loss
M = Margin
L_T = Limit

Values are in dB, positive margin means value is below limit.

4.2. Test system set-up for conducted measurements on antenna port

Conducted Set-up W1

Bluetooth Low Energy conducted RF-Setup 1 (W1 Set-up)

General description:

The EUT's RF-signal is coupled out by a suitable antenna coupling connector (1). The signal is first attenuated (2) then connected to the power meter (3) for conducted power measurements. The specific attenuation loss is determined prior to the measurement within a set-up attenuation measurement. These are then taken into account by correcting the measurement readings.

Schematic:

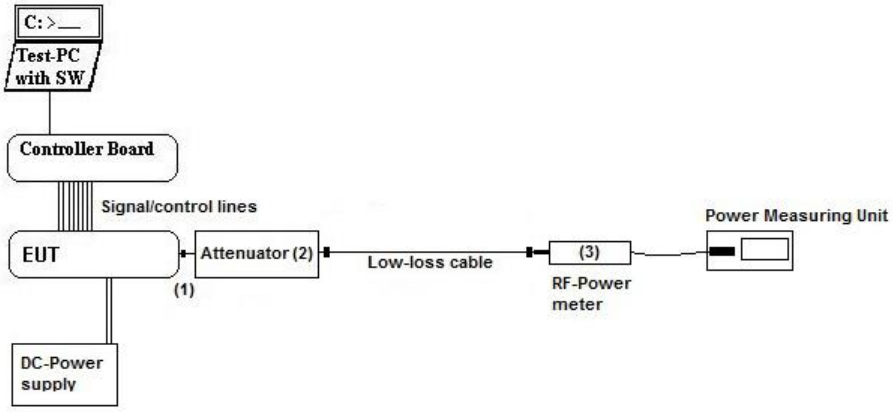

Testing method: ANSI C63.10:2013, KDB 558074 D01 DTS Meas.Guidance v04

Used Equipment

Passive Elements	Test Equipment	Remark:
☒ 20 dB Attenuator ☒ Low loss RF-cables ☒	☒ Power Meter ☒ DC-Power Supply ☒ Spectrum-Analyser	See List of equipment under each test case and chapter 8 for calibration info

Measurement uncertainty See chapter 8

4.3. Test system set-up for radiated magnetic field measurements below 30 MHz

Specification: ANSI C63.10-2013 chapter 6.4 (§6.4.4.2)

General Description: Evaluating the radiated field emissions are done first by an exploratory emission measurement and a final measurement for most critical frequencies determined.

The loop antenna was placed at 1 m height above ground plane and 3 m measurement distance from set-up for investigations. Because of reduced measurement distance, correction data were applied, as stated in chapter "General Limit - Radiated field strength emissions below 30 MHz". The tests are performed in the semi anechoic room recognized by the regulatory commission.

Schematic:

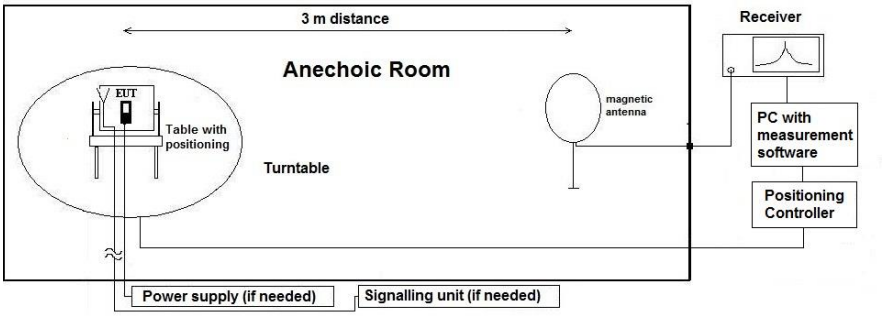

Testing method:

Exploratory, preliminary measurement
The EUT and it's associated accessories are placed on a non-conductive position manipulator (tipping device) of 0.8 m height which is placed on the turntable. By rotating the turntable (step 90°, range 0°to 360°) and the EUT itself either on 3-orthogonal axis (portable equipment) or 2-orthogonal axis (defined operational position of EUT), the emission spectrum was recorded. The loop antenna was moved at least to 2-perpendicular axes (antenna vector in direction of EUT and parallel to EUT) in order to maximize the emissions. The results are documented in a diagram. Critical frequencies (low margin to limit) are saved within a data reduction table for further investigations. If various operating modes are supported, further investigations are made to find the worst-case. Also the interconnection cables and equipment position were varied in order to maximize the emissions.

Final measurement on critical frequencies
Based on the exploratory measurements, the most critical frequencies are re-measured by maintaining the EUT's worst-case operation mode, cable position, etc.

First a frequency zoom around the critical frequency is done to locate the frequency more precisely. After this step, for all identified critical frequencies, the maximum peak was determined.

Following parameters were varied: the turntable angle continuously in the range 0 to 360 degree, the EUT itself either over 3-orthogonal axis (not defined usage position) or 2-orthogonal axis (defined usage position).

On the determined worst-case position, a final measurement with necessary bandwidth and detector according standard has been carried out.

Formula:

$E_C = E_R + AF + C_L + D_F - G_A$

$M = L_T - E_C$

AF =Antenna factor
C_L = Cable loss
D_F= Distance correction factor
E_C = Electrical field – corrected value
E_R = Receiver reading
G_A= Gain of pre-amplifier (if used)
L_T = Limit
M = Margin

All units are dB-units, positive margin means value is below limit.

Distance correction: Reference for applied correction (extrapolating) factors due to reduced measurement distance:
ANSI C63.10:2013, §6.4.4.2 - Equations (2) + (3) + (4)

4.4. Test system set-up for radiated electric field measurement 30 MHz to 1 GHz

Specification: ANSI C63.4-2014 chapter 8.2.3, ANSI C63.10-2013 chapter 6.5

General Description: Evaluating the field emissions have to be done first by an exploratory emissions measurement and a final measurement for most critical frequencies. The tests are performed in a NSA-compliant semi anechoic room (SAR) recognized by the regulatory commissions.

Schematic:

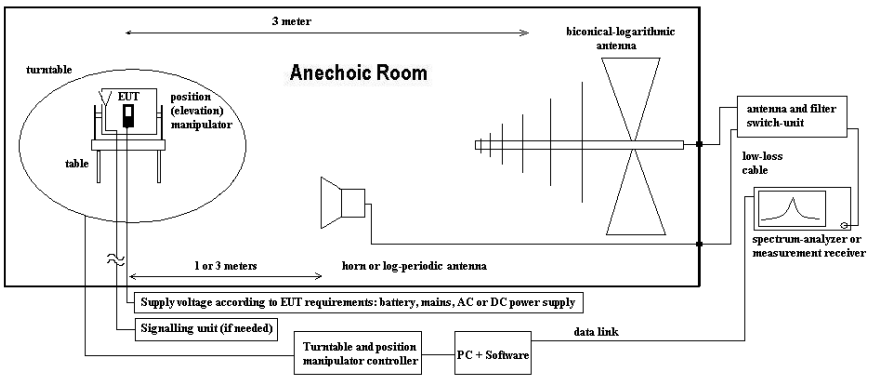

Testing method:

Exploratory, preliminary measurements
The EUT and its associated accessories are placed on a non-conductive position manipulator (tipping device) of 0.8 m height which is placed on the turntable. By rotating the turntable (range 0° to 360°, step 90°) and the EUT itself either on 3-orthogonal axis (portable equipment) or 2-orthogonal axis (defined operational position of EUT) the emission spectrum and it's characteristics was recorded with an EMI-receiver, broadband antenna and software.

Measurement antenna: horizontal and vertical, heights: 1,0 m and 1,82 m as worst-case determined by an exploratory emission measurements. The results are documented in a diagram. Critical frequencies (low margin to limit) are saved within a table for further investigations. If various operating modes are supported, further investigations are made to find the worst-case of them. Also the interconnection cables and equipment position were varied in order to maximize the emissions.

Final measurement on critical frequencies
Based on the exploratory measurements, the most critical frequencies are re-measured by maintaining the EUT's worst-case operation mode, cable position, etc. either on 10m OATS or 3m semi-anechoic room.

First a frequency zoom around the critical frequency is done to locate the frequency more precisely. After this step, for all identified critical frequencies, the maximum peak was determined.

Following parameters were varied: the turntable angle continuously in the range 0 to 360 degree, the EUT itself either over 3-orthogonal axis (not defined usage position) or 2-orthogonal axis (defined usage position). The measurement antenna height between 1 m and 4 m.

On the determined worst-case position, a final measurement with necessary bandwidth and detector according standard has been carried out.

Formula:

$E_C = E_R + AF + C_L + D_F - G_A$ (1)

$M = L_T - E_C$ (2)

AF = Antenna factor
C_L = Cable loss
D_F = Distance correction factor (if used)
E_C = Electrical field – corrected value
E_R = Receiver reading
G_A = Gain of pre-amplifier (if used)
L_T = Limit
M = Margin

All units are dB-units, positive margin means value is below limit.

4.5. Test system set-up for radiated electric field measurement above 1 GHz

Specification: ANSI C63.4-2014 chapter 8.3, ANSI C63.10-2013 chapter 6.6.3.3 & 6.6.4

General Description: Evaluating the emissions have to be done first by an exploratory emissions measurement and a final measurement for most critical frequencies. The tests are performed in a CISPR 16-1-4:2010 compliant fully anechoic room (FAR) recognized by the regulatory commission. The measurement distance was set to 3 meter for frequencies up to 18 GHz and 2 meter above 18 GHz. A logarithmic periodic antenna is used for the frequency range 30 MHz to 1 GHz. Horn antennas are used for frequency range 1 GHz to 40 GHz. The EUT is aligned within 3 dB beam width of the measurement antenna with three orthogonal axis measurements on the EUT.

Schematic:

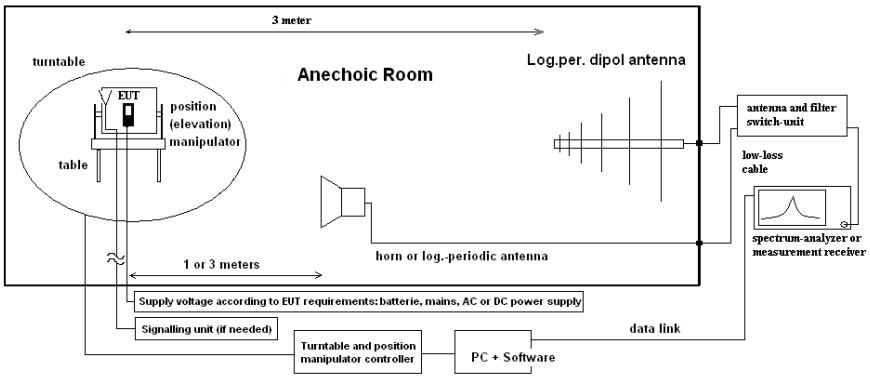

Testing method:

Exploratory, preliminary measurements
The EUT and its associated accessories are placed on a non-conductive position manipulator (tipping device) of 1.55 m height which is placed on the turntable. By rotating the turntable (range 0° to 360°, step 15°) and the EUT itself either on 3-orthogonal axis (portable equipment) or 2-orthogonal axis (defined operational position of EUT) the emission spectrum and it's characteristics was recorded with an EMI-receiver, broadband antenna and software.
The measurements are performed in horizontal and vertical polarization of the measurement antennas. The results are documented in a diagram. Critical frequencies (low margin to limit) are saved within a table for further investigations. If various operating modes are supported, further investigations are made to find the worst-case of them. Also the interconnection cables and equipment position were varied in order to maximize the emissions.

Final measurement on critical frequencies
Based on the exploratory measurements, the most critical frequencies are re-measured by maintaining the EUT's worst-case operation mode, cable position, etc.

First a frequency zoom around the critical frequency is done to locate the frequency more precisely. After this step, for all identified critical frequencies, the maximum peak was determined. Following parameters were varied: the turntable angle continuously in the range 0 to 360 degree, the EUT itself over 3-orthogonal axis and the height for EUT with large dimensions.

On the determined worst-case position, a final measurement with necessary bandwidth and detector according standard has been carried out.
On the determined worst-case position, a final measurement with necessary bandwidth and detector according standard has been carried out.

Formula:

$E_C = E_R + AF + C_L + D_F - G_A$ (1)

$M = L_T - E_C$ (2)

E_C = Electrical field – corrected value
E_R = Receiver reading
M = Margin
L_T = Limit
AF = Antenna factor
C_L = Cable loss
D_F = Distance correction factor (if used)
G_A = Gain of pre-amplifier (if used)

All units are dB-units, positive margin means value is below limit.

5. Measurement results

5.1. Duty-Cycle

5.1.1. Test location and equipment

(for reference numbers please see chapter 'List of test equipment')

Ambient Climatic conditions		Temperature: (22±2)°C		Rel. humidity: (45±15)%		
test site	☐ 441 EMI SAR	☐ 348 EMI cond.	☒ 443 EMI FAR	☒ 347 Radio.lab.	☐ 337 OATS	☐
equipment	☐ 331 HC 4055	☐	☐	☐	☐	☐
spectr. analys.	☒ 683 FSU26	☐ 120 FSEM	☐ 264 FSEK	☐	☐	☐
power meter	☐ 262 NRV-S	☐ 266 NRV-Z31	☐ 265 NRV-Z33	☐ 261 NRV-Z55	☐ 356 NRV-Z1	☐
multimeter	☐ 341 Fluke 112	☐	☐	☐	☐	☐
DC power	☐ 086 LNG50-10	☐ 087 EA3013	☐ 354 NGPE 40	☐ 349 car battery	☐ 350 Car battery	☐ 463 HP3245A
Supply Voltage	☐ 230 V 50 Hz via public mains		☒ 3.7 V DC Li-ion battery			
otherwise	☐ 530 Attenuator 10dB	☒ K4 Cable				

5.1.2. Reference

FCC	☒ §15.247(b) (3) + KDB 558074 D01 DTS Meas Guidance v04
ISED	☒ RSS-247, Chapter 5.4(4)
ANSI	☒ ANSI 63.10:2013
Specification	*For systems using digital modulation in the 902-928 MHz, 2400-2483.5 MHz, and 5725-5850 MHz bands: 1 Watt. As an alternative to a peak power measurement, compliance with the one Watt limit can be based on a measurement of the maximum conducted output power. Maximum Conducted Output Power is defined as the total transmit power delivered to all antennas and antenna elements averaged across all symbols in the signalling alphabet when the transmitter is operating at its maximum power control level. Power must be summed across all antennas and antenna elements. The average must not include any time intervals during which the transmitter is off or is transmitting at a reduced power level. If multiple modes of operation are possible (e.g., alternative modulation methods), the maximum conducted output power is the highest total transmit power occurring in any mode.*

5.1.3. EUT settings:

The EUT was instructed to send with maximum power (if adjustable) according applicants instructions. Different modulation characteristics have been checked, e.g. data rates which EUT can operate.

A special firmware program is used for test purposes. In opposite to normal operating mode a higher duty-cycle is set in order to facilitate the measurements. This is maximized at the extent possible.

The necessary duty-cycle correction factor is determined on nominal conditions on one channel in each operable frequency-band. It is assumed that no noticeable changes occur when tested on other channels or climatic conditions. The Duty-Cycle was constant, means without variations.

5.1.4. Test condition and measurement test set-up

Signal ink to test system (if used):	☐ air link	☐ cable connection	☒ none
EUT-grounding	☒ none	☐ with power supply	☐ additional connection
Equipment set up	☒ table top 1.5m height		☐ floor standing
Climatic conditions	Temperature: (22±3°C)		Rel. humidity: (40±20)%
General measurement procedures	Please see chapter “Test system set-up for conducted RF-measurement at antenna Port” (W1 Set-up)		

5.1.5. Measurement method and analyzer settings:

Method of measurement: ☒ conducted
☐ radiated

MEASUREMENT METHOD/ SPECTRUM-ANALYZER SETTINGS:

Measurement Method [1.)]	§15.247(b) (3) Maximum Peak	1.) ☐ PK1-Method (§5.2.1.1): RBW > 6dB-bandwidth of the signal, ANSI 63.10: 2009, chapter 6.10.2.1a 2.) ☐ PK2-Method (§5.2.1.2): Channel integration method (ANSI 63.10:2013) 3.) ☐ PK1-Method (§9.1.2 KDB): Peak Power Meter Method
	§15.247(b) (3) Maximum Average	4.) ☐ AVG1 - power averaging over EBW + integrated band power measurement 5.) ☐ AVG2 - trace averaging over EBW + integrated band power measurement 6.) ☒ RMS power meter method
	MIMO	7.) ☐ Method as described in Chapter 3.8 was used for measurements on two available RF-Antenna ports.
Center Frequency		Nominal channel frequency
Span		Zero Span
Resolution Bandwidth (RBW)		3MHz
Video Bandwidth (VBW)		10MHz
Sweep time		coupled
Detector		Peak, Max hold mode for method PK1/PK2 or RMS and trace average for method AVG1/AVG2
Sweep Mode		Repetitive mode, allow trace to stabilize
Analyzer-Mode		☐ normal ☐ activated channel integration method with limits set to the EBW of the signal

Remark 1: guidance 558074 D01 measurement DTS guidance v04

Calculated with following formulas:

Duty cycle:	$x = \frac{Tx_{on}}{Tx_{on} + Tx_{off}}$	Duty cycle factor [dB]:	$10\log\left(\frac{1}{x}\right)$

☒ The results were corrected in order to evaluate for worst-case result each time when average values are necessary for example average radiated emissions or similar
☐ No correction necessary: Duty-Cycle > 98%

5.1.6. RESULTS

DUT Frequency (MHz)	Data Rate	DutyCycle (%)	Converted to DC	10log (1/DC)
2441.000000	1Mbps	77.484	0.77484	1.10788
2441.000000	2Mbps	77.435	0.77435	1.11062
2441.000000	3Mbps	77.444	0.77444	1.11012

5.2. Maximum peak conducted output power

5.2.1. Test location and equipment (for reference numbers please see chapter 'List of test equipment')

test location	☒ CETECOM Essen (Chapter. 2.2.1)		☐ 443 System CTC-FAR-EMI-		☐ Please see Chapter. 2.2.3	
test site	☐ 441 EMI SAR	☐ 487 SAR NSA	☒ 347 Radio.lab.		☐	☐
receiver	☐ 377 ESCS30	☐ 001 ESS	☐ 489 ESU 40	☐	☐	☐
spectr. analys.	☐ 584 FSU	☐ 120 FSEM	☐ 264 FSEK	☐ 489 ESU 40	☐	☐
antenna	☐ 574 BTA-L	☐ 133 EMCO3115	☐ 302 BBHA9170	☐ 289 CBL 6141	☐ 030 HFH-Z2	☐ 477 GPS
signaling	☐ 392 MT8820A	☐ 436 CMU	☐ 547 CMU			
otherwise	☐ 266 NRV-Z31	☐ 600 NRVD	☐ 110 USB LWL	☐ 482 Filter Matrix	☐ 378 RadiSense	☒ 693 TS8997
DC power	☐ 671 EA-3013S	☐ 463 HP3245A	☐ 459 EA 2032-50	☐ 268 EA- 3050	☐ 494 AG6632A	☐ 498 NGPE 40
otherwise	☐ 331 HC 4055	☐ 248 6 dB Attenuator	☐ 529 Power divider	☐ - cable OTA20		
	☐ 530 10dB Attenuator		☐ K 4 Cable kit			
Supply Voltage	☐ 230 V 50 Hz via public mains		☒ 13.5 V DC			

5.2.2. Reference

FCC	☒ §15.247(b) (3) + KDB 558074 D01 DTS Meas Guidance v04
ISED	☒ RSS-247, Chapter 5.4(4)
ANSI	☒ ANSI 63.10:2013
Specification	*For systems using digital modulation in the 902-928 MHz, 2400-2483.5 MHz, and 5725-5850 MHz bands: 1 Watt. As an alternative to a peak power measurement, compliance with the one Watt limit can be based on a measurement of the maximum conducted output power. Maximum Conducted Output Power is defined as the total transmit power delivered to all antennas and antenna elements averaged across all symbols in the signalling alphabet when the transmitter is operating at its maximum power control level. Power must be summed across all antennas and antenna elements. The average must not include any time intervals during which the transmitter is off or is transmitting at a reduced power level. If multiple modes of operation are possible (e.g., alternative modulation methods), the maximum conducted output power is the highest total transmit power occurring in any mode.*

5.2.3. EUT settings:

The EUT was instructed to send with maximum power (if adjustable) according applicants instructions.
Different modulation characteristics have been checked, e.g. data rates which EUT can operate.

5.2.4. Test condition and measurement test set-up

Signal ink to test system (if used):	☐ air link	☐ cable connection	☒ none
EUT-grounding	☒ none	☐ with power supply	☐ additional connection
Equipment set up	☒ table top 1.5m height		☐ floor standing
Climatic conditions	Temperature: (22±3°C)		Rel. humidity: (40±20)%
General measurement procedures	Please see chapter “Test system set-up for conducted RF-measurement at antenna Port” (W1 Set-up)		

5.2.5. Measurement method and analyzer settings:

The measurement was performed in non-hopping transmission mode with the carrier set to lowest/middle and highest channel.

MEASUREMENT METHOD/ SPECTRUM-ANALYZER SETTINGS:

Measurement Method [1.)]	§15.247(b) (3) Maximum Peak	8.) ☐ PK1-Method (§5.2.1.1): RBW > 6dB-bandwidth of the signal, ANSI 63.10: 2009, chapter 6.10.2.1a 9.) ☐ PK2-Method (§5.2.1.2): Channel integration method (ANSI 63.10:2013) 10.) ☐ PK1-Method (§9.1.2 KDB): Peak Power Meter Method
	§15.247(b) (3) Maximum Average	11.) ☐ AVG1 - power averaging over EBW + integrated band power measurement 12.) ☐ AVG2 - trace averaging over EBW + integrated band power measurement 13.) ☒ RMS power meter method
	MIMO	14.) ☐ Method as described in Chapter 3.8 was used for measurements on two available RF-Antenna ports.
Center Frequency		Nominal channel frequency
Span		30% higher than the EBW measured before
Resolution Bandwidth (RBW)		3MHz
Video Bandwidth (VBW)		10MHz
Sweep time		coupled
Detector		Peak, Max hold mode for method PK1/PK2 or RMS and trace average for method AVG1/AVG2
Sweep Mode		Repetitive mode, allow trace to stabilize
Analyzer-Mode		☐ normal ☐ activated channel integration method with limits set to the EBW of the signal

Remark 1: guidance 558074 D01 measurement DTS guidance v04

5.2.6. RESULTS

APLICANT'S DECLARED ANTENNA CHARACTERISTICS:

☒ Directional Gain < 6 dBi (measured: difference between measured conducted and radiated eirp. power)
☐ Directional Gain > 6 dBi (measured / applicant's declaration) -> conducted power reduction necessary

Maximum declared antenna gain [isotropic]: 1.0dBi

Different modulation types and data rates were tested in order to find the maximum conducted output power. **Enclosed are only the maximum values for each modulation format**, pls. compare separate document A1 for all results.

Max. Peak rms power (conducted) [dBm]				Limit [dBm]	Result
Set-up no.: 2 Op-Mode: 1	Channel 00 (2402 MHz)	Channel = 39 (2442 MHz)	Channel = 78 (2480 MHz)		
Measured Level 3DH5	-4.90	-5.10	-4.80	30	passed

Remark: External Path Loss -> set as correction factor in spectrum-analyzer.

5.3. General Limit - Radiated field strength emissions below 30 MHz

5.3.1. Test location and equipment

test location	☒ CETECOM Essen (Chapter. 2.2.1)		☐ Please see Chapter. 2.2.2		☐ Please see Chapter. 2.2.3	
test site	☒ 441 EMI SAR	☐ 487 SAR NSA	☐ 347 Radio.lab.		☐	☐
receiver	☐ 377 ESCS30	☒ 001 ESS	☐	☐	☐	☐
spectr. analys.	☐ 584 FSU	☐ 120 FSEM	☐ 264 FSEK	☐	☐	☐
antenna	☐ 574 BTA-L	☐ 133 EMCO3115	☐ 302 BBHA9170	☐ 289 CBL 6141	☒ 030 HFH-Z2	☐ 477 GPS
signaling	☐ 392 MT8820A	☐ 371 CBT32	☐ 547 CMU	☐ 594 CMW		
otherwise	☐ 400 FTC40x15E	☐ 401 FTC40x15E	☐ 110 USB LWL	☐ 482 Filter Matrix	☐ 378 RadiSense	
DC power	☐ 671 EA-3013S	☐ 457 EA 3013A	☐ 459 EA 2032-50	☐ 268 EA- 3050	☐ 494 AG6632A	☐ 498 NGPE 40
Supply Voltage	☐ 230 V 50 Hz via public mains		☒ 3.7 V DC Li-ion battery			

5.3.2. Requirements

FCC	Part 15, Subpart C, §15.205 & §15.209			
ISED	RSS-Gen: Issue 5: §8.9 Table 6			
ANSI	C63.10-2013			
Frequency [MHz]	Field strength limit [µV/m]	[dBµV/m]	Distance [m]	Remarks
0.009 – 0.490	2400/f (kHz)	67.6 – 20Log(f) (kHz)	300	Correction factor used due to measurement distance of 3 m
0.490 – 1.705	24000/f (kHz)	87.6 – 20Log(f) (kHz)	30	Correction factor used due to measurement distance of 3 m
1.705 – 30	30	29.5	30	Correction factor used due to measurement distance of 3 m

5.3.3. Test condition and test set-up

Signal link to test system (if used):		☐ air link	☐ cable connection	☒ none
EUT-grounding		☒ none	☐ with power supply	☐ additional connection
Equipment set up		☒ table top		☐ floor standing
Climatic conditions		Temperature: (22±3°C)		Rel. humidity: (40±20)%
EMI-Receiver or Analyzer Settings	Scan data	☒ 9 – 150 kHz RBW/VBW = 200 Hz Scan step = 80 Hz ☒ 150 kHz – 30 MHz RBW/VBW = 9 kHz Scan step = 4 kHz ☐ other:		
	Scan-Mode Detector Mode: Sweep-Time	☒ 6 dB EMI-Receiver Mode ☐ 3dB Spectrum analyser Mode Peak (pre-measurement) and Quasi-PK/Average (final if applicable) Repetitive-Scan, max-hold Coupled – calibrated display if continuous signal otherwise adapted to EUT's individual transmission duty-cycle		
General measurement procedures		Please see chapter "Test system set-up radiated magnetic field measurements below 30 MHz"		

5.3.4. Measurement Results

The results are presented below in summary form only. For more information please consult the diagrams included in annex 1.

The EUT is put on operation on middle channel only. If critical peaks are found (Margin <10 dB) the lowest and highest channels will be performed too.
Table of measurement results:

Diagram No.	Carrier Channel		Frequency range	Set-up no.	OP-mode no.	Remark	Used detector			Result
	Range	No.					PK	AV	QP	
2.02a+b	Low	00	9 kHz - 30 MHz	1	1	BT-EDR-3Mbps	☒	☐	☐	Pass

Remark: see diagrams in Annex A1

5.3.5. Correction factors due to reduced meas. distance (f< 30 MHz)

The used correction factors when the measurement distance is reduced compared to regulatory measurement distance, are calculated according Extrapolation formulas valid for EUT's with maximum dimension of 0.625xLambda. Formula 2+3+4 as presented in ANSI C63.10, Chapter 6.4.4 are used for the calculations of proper extrapolation factors.

Frequency -Range	f [kHz/MHz]	Lambda [m]	Far-Field Point [m]	Distance Limit accord. 15.209 [m]	1st Condition (dmeas< $D_{near-field}$)	2'te Condition (Limit distance bigger $d_{near-field}$)	Distance Correction accord. Formula
kHz	9,00E+03	33333,33	5305,17	300	fullfilled	not fullfilled	-80,00
	1,00E+04	30000,00	4774,65		fullfilled	not fullfilled	-80,00
	2,00E+04	15000,00	2387,33		fullfilled	not fullfilled	-80,00
	3,00E+04	10000,00	1591,55		fullfilled	not fullfilled	-80,00
	4,00E+04	7500,00	1193,66		fullfilled	not fullfilled	-80,00
	5,00E+04	6000,00	954,93		fullfilled	not fullfilled	-80,00
	6,00E+04	5000,00	795,78		fullfilled	not fullfilled	-80,00
	7,00E+04	4285,71	682,09		fullfilled	not fullfilled	-80,00
	8,00E+04	3750,00	596,83		fullfilled	not fullfilled	-80,00
	9,00E+04	3333,33	530,52		fullfilled	not fullfilled	-80,00
	1,00E+05	3000,00	477,47		fullfilled	not fullfilled	-80,00
	1,25E+05	2400,00	381,97		fullfilled	not fullfilled	-80,00
	2,00E+05	1500,00	238,73		fullfilled	fullfilled	-78,02
	3,00E+05	1000,00	159,16		fullfilled	fullfilled	-74,49
	4,00E+05	750,00	119,37		fullfilled	fullfilled	-72,00
	4,90E+05	612,24	97,44		fullfilled	fullfilled	-70,23
	5,00E+05	600,00	95,49	30	fullfilled	not fullfilled	-40,00
	6,00E+05	500,00	79,58		fullfilled	not fullfilled	-40,00
	7,00E+05	428,57	68,21		fullfilled	not fullfilled	-40,00
	8,00E+05	375,00	59,68		fullfilled	not fullfilled	-40,00
	9,00E+05	333,33	53,05		fullfilled	not fullfilled	-40,00
MHz	1,00	300,00	47,75		fullfilled	not fullfilled	-40,00
	1,59	188,50	30,00		fullfilled	not fullfilled	-40,00
	2,00	150,00	23,87		fullfilled	fullfilled	-38,02
	3,00	100,00	15,92		fullfilled	fullfilled	-34,49
	4,00	75,00	11,94		fullfilled	fullfilled	-32,00
	5,00	60,00	9,55		fullfilled	fullfilled	-30,06
	6,00	50,00	7,96		fullfilled	fullfilled	-28,47
	7,00	42,86	6,82		fullfilled	fullfilled	-27,13
	8,00	37,50	5,97		fullfilled	fullfilled	-25,97
	9,00	33,33	5,31		fullfilled	fullfilled	-24,95
	10,00	30,00	4,77		fullfilled	fullfilled	-24,04
	10,60	28,30	4,50		fullfilled	fullfilled	-23,53
	11,00	27,27	4,34		fullfilled	fullfilled	-23,21
	12,00	25,00	3,98		fullfilled	fullfilled	-22,45
	13,56	22,12	3,52		fullfilled	fullfilled	-21,39
	15,00	20,00	3,18		fullfilled	fullfilled	-20,51
	15,92	18,85	3,00		fullfilled	fullfilled	-20,00
	17,00	17,65	2,81		not fullfilled	fullfilled	-20,00
	18,00	16,67	2,65		not fullfilled	fullfilled	-20,00
	20,00	15,00	2,39		not fullfilled	fullfilled	-20,00
	21,00	14,29	2,27		not fullfilled	fullfilled	-20,00
	23,00	13,04	2,08		not fullfilled	fullfilled	-20,00
	25,00	12,00	1,91		not fullfilled	fullfilled	-20,00
	27,00	11,11	1,77		not fullfilled	fullfilled	-20,00
	29,00	10,34	1,65		not fullfilled	fullfilled	-20,00
	30,00	10,00	1,59		not fullfilled	fullfilled	-20,00

5.4. General Limit - Radiated field strength emissions, 30 MHz - 1 GHz

5.4.1. Test location and equipment

test location	☒ CETECOM Essen (Chapter. 2.2.1)		☐ Please see Chapter. 2.2.2		☐ Please see Chapter. 2.2.3	
test site	☒ 441 EMI SAR	☒ 487 SAR NSA				
receiver	☐ 377 ESCS30	☒ 001 ESS	☐ 489 ESU 40	☐ 620 ESU 26		
spectr. analys.	☐ 584 FSU	☐ 120 FSEM	☐ 264 FSEK			
antenna	☒ 574 BTA-L	☐ 133 EMCO3115	☐ 302 BBHA9170	☐ 289 CBL 6141	☐ 030 HFH-Z2	☐ 477 GPS
signaling	☐ 392 MT8820A	☐ 371 CBT32	☐ 547 CMU	☐ 594 CMW		
otherwise	☐ 400 FTC40x15E	☐ 401 FTC40x15E	☐ 110 USB LWL	☒ 482 Filter Matrix		
DC power	☐ 456 EA 3013A	☐ 457 EA 3013A	☐ 459 EA 2032-50	☐ 268 EA- 3050	☐ 494 AG6632A	☐ 498 NGPE
Supply Voltage	☐ 230 V 50 Hz via public mains		☒ 13.5 V DC			

5.4.2. Requirements/Limits

FCC		☐ Part 15 Subpart B, §15.109, class B ☒ Part 15 Subpart C, §15.209 @ frequencies defined in §15.205	
ISED (IC)		☒ RSS-Gen., Issue 4, Chapter 8.9, Table 4+6 (licence-exempt radio apparatus) ☐ RSS-Gen., Issue 4, Chapter 7.1.2, Table 2 (receiver) ☐ ICES-003, Issue 6, Table 5 (Class B) ☒ RSS-247, Issue 2, Chapter 5	
ANSI		☐ C63.4-2014 ☒ C63.10-2013	
Limit	Frequency [MHz]	Radiated emissions limits, 3 meters	
		QUASI Peak [µV/m]	QUASI-Peak [dBµV/m]
	30 - 88	100	40.0
	88 - 216	150	43.5
	216 - 960	200	46.0
	above 960	500	54.0

5.4.3. Restricted bands of operation (FCC §15.205)

MHz	MHz	MHz	GHz
0.090-0.110	16.42-16.423	399.9-410	4.5-5.15
0.495-0.505	16.69475-16.69525	608-614	5.35-5.46
2.1735-2.1905	16.80425-16.80475	960-1240	7.25-7.75
4.125-4.128	25.5-25.67	1300-1427	8.025-8.5
4.20725-4.20775	37.5-38.25	1645.5-1646.5	9.3-9.5
6.215-6.218	73-74.6	1660-1710	10.6-12.7
6.26775-6.26825	74.8-75.2	1718.8-1722.2	13.25-13.4
6.31175-6.31225	108-121.94	2200-2300	14.47-14.5
8.291-8.294	123-138	2310-2390	15.35-16.2
8.362-8.366	149.9-150.05	2483.5-2500	17.7-21.4
8.37625-8.38675	156.52475-156.52525	2690-2900	22.01-23.12
8.41425-8.41475	156.7-156.9	3260-3267	23.6-24.0
12.29-12.293	162.0125-167.17	3332-3339	31.2-31.8
12.51975-12.52025	167.72-173.2	3345.8-3358	36.43-36.5
12.57675-12.57725	240-285	3600-4400	--
13.36-13.41	322-335.4	--	--
Remark: only spurious emissions are allowed within these frequency bands not exceeding the limits per §15.209			

5.4.4. Test condition and measurement test set-up

Signal link to test system (if used):		☐ air link	☐ cable connection	☒ none
EUT-grounding		☒ none	☐ with power supply	☐ additional connection
Equipment set up		☒ table top 0.8m height		☐ floor standing
Climatic conditions		Temperature: (22±3°C)		Rel. humidity: (40±20)%
EMI-Receiver (Analyzer) Settings	Scan frequency range:	☒ 30 – 1000 MHz ☐ other:		
	Scan-Mode	☒ 6 dB EMI-Receiver Mode ☐ 3 dB spectrum analyser mode		
	Detector	Peak / Quasi-peak		
	RBW/VBW	100 kHz/300 kHz		
	Mode:	Repetitive-Scan, max-hold		
	Scan step	80 kHz		
	Sweep-Time	Coupled – calibrated display if continuous tx-signal otherwise adapted to EUT's individual duty-cycle		
General measurement procedures		Please see chapter "Test system set-up for electric field measurement in the range 30 MHz to 1 GHz"		

5.4.5. MEASUREMENT RESULTS

The results are presented below in summary form only. For more information please consult the diagrams included in annex 1.

The EUT is put on operation on middle channel only. If critical peaks are found (Margin <10 dB) the lowest and highest channels will be performed too.

Table of measurement results:

Dia-gram no.	Carrier Channel		Frequency range	Set-up no.	OP-mode no.	Remark	Used detector			Result
	Range	No.					PK	AV	QP	
3.02a+b	Low	00	30 MHz – 1 GHz	1	1	BT-EDR-3Mbps	☒	☐	☒	Pass

Remark: see diagrams in Annex A1

5.5. General Limit - Radiated emissions, above 1 GHz

5.5.1. Test location and equipment FAR

test site	☐441 EMI SAR	☐348 EMI cond.	☒443 EMI FAR	☐347 Radio.lab.	☐337 OATS	☐
spectr. analys.	☐584 FSU	☐120 FSEM	☐264 FSEK	☒489 ESU 40	☐	☐
antenna meas	☐574 BTA-L	☐289 CBL 6141	☒608 HL 562	☒549 HL025	☒302 BBHA9170	☐477 GPS
antenna meas	☐123 HUF-Z2	☐132 HUF-Z3	☐030 HFH-Z2	☐376 BBHA9120E		☐
antenna subst	☐071 HUF-Z2	☐020 EMCO3115	☐063 LP 3146	☐303 BBHA9170	☐	☐
multimeter	☐341 Fluke 112	☐	☐	☐	☐	☐
signaling	☐392 MT8820A	☐371 CBT32	☐547 CMU	☐594 CMW		
DC power	☐086 LNG50-10	☐087 EA3013	☐354 NGPE 40	☐349 car battery	☐350 Car battery	☐
Supply Voltage	☐ 230 V 50 Hz via public mains		☒ 13.5 V DC			

5.5.2. Requirements/Limits (CLASS B equipment)

FCC	☐ Part 15 Subpart B, §15.109 class B ☒ Part 15 Subpart C, §15.209 for frequencies defined in §15.205 ☐ Part 15 Subpart C, §15.407(b)(1)(2)(3) 9			
ISED	☒ RSS-Gen., Issue 5, Chapter 8.9, Table 5+6 (transmitter licence excempt) ☐ RSS-Gen., Issue 4, Chapter 8.9, Table 2 (receiver) ☐ ICES-003, Issue 6, Chapter 6.2.2, Table 7 (class B) ☐ RSS-247, Issue 2, Chapter 6			
ANSI	☐ C63.4-2014 ☒ C63.10-2013			
Frequency [MHz]	Limits			
	AV [µV/m]	AV [dBµV/m]	Peak [µV/m]	Peak [dBµV/m]
above 1 GHz for frequencies as defined in §15.205 or RSS-Gen., Issue 4, §8.10 - Table 6	500	54.0	5000	74.0

5.5.3. Test condition and measurement test set-up

Signal link to test system (if used):		☐ air link	☐ cable connection	☒ none
EUT-grounding		☒ none	☐ with power supply	☐ additional connection
Equipment set up		☒ table top 1.5m height		☐ floor standing
Climatic conditions		Temperature: (22±3°C)		Rel. humidity: (40±20)%
Spectrum-Analyzer settings	Scan frequency range:	☒ 1 – 18 GHz ☒18 – 25 GHz ☐ 18 – 40 GHz ☐ other:		
	Scan-Mode	☒ 6 dB EMI-Receiver Mode ☐ 3 dB Spectrum analyser Mode		
	Detector	Peak and Average		
	RBW/VBW	1 MHz / 3 MHz		
	Mode:	Repetitive-Scan, max-hold		
	Scan step	400 kHz		
	Sweep-Time	Coupled – calibrated display if CW signal otherwise adapted to EUT's individual duty-cycle		
General measurement procedures		Please see chapter "Test system set-up for radiated electric field measurements above 1 GHz"		

5.5.4. Measurement Results

The results are presented below in summary form only. For more information please consult the diagrams included in annex 1.

5.5.4.1. Measurement Results for frequency range 1 GHz to 18 GHz

Dia-gram no.	Carrier Channel		Frequency range	Set-up no.	OP-mode no.	Remark	Used detector			Result
	Range	No.					PK	AV	QP	
8.02a+b	Low	00	1 GHz – 18 GHz	1	1	BT-EDR-3Mbps	☒	☒	☐	Pass

Remark: see diagrams in Annex A1

5.5.4.2. Measurement Results for frequency range 18 GHz to 40 GHz

Dia-gram no.	Carrier Channel		Frequency range	Set-up no.	OP-mode no.	Remark	Used detector			Result
	Range	No.					PK	AV	QP	
4.10c	Low	00	18 GHz – 40 GHz	1	1	BT-EDR-3Mbps	☒	☒	☐	Pass

Remark: see diagrams in Annex A1

5.6. RF-Parameter - Radiated Band Edge compliance measurements

5.6.1. Test location and equipment FAR

test site	☐441 EMI SAR	☐348 EMI cond.	☒443 EMI FAR	☐347 Radio.lab.	☐337 OATS	☐
spectr. analys.	☐584 FSU	☐120 FSEM	☐264 FSEK	☒489 ESU 40	☐	☐
antenna meas	☐574 BTA-L	☐289 CBL 6141	☐608 HL 562	☒549 HL025	☐302 BBHA9170	☐477 GPS
antenna meas	☐123 HUF-Z2	☐132 HUF-Z3	☐030 HFH-Z2	☐	☐	☐
antenna subst	☐071 HUF-Z2	☐020 EMCO3115	☐063 LP 3146	☐303 BBHA9170	☐	☐
multimeter	☐341 Fluke 112	☐	☐	☐	☐	☐
signaling	☐392 MT8820A	☐371 CBT32	☐547 CMU	☐594 CMW		
DC power	☐086 LNG50-10	☐087 EA3013	☐354 NGPE 40	☐349 car battery	☐350 Car battery	☐
Supply Voltage	☐ 230 V 50 Hz via public mains		☒ 13.5 V DC			

5.6.2. Requirements/Limits

FCC	☐ Part 15 Subpart B, §15.109 class B ☒ Part 15 subpart C, §15.209 @ frequencies defined in §15.205
ISED	☒ RSS-247 Issue 2, Chapter 5.5, RSS-Gen: Issue 5: §8.9 Table 5+7
ANSI	☐ C63.4-2009 ☐ C63.4-2014 ☐ C63.10-2009 ☒ C63.10-2013, Chapter 6.10.6

5.6.3. Test condition and measurement test set-up

Signal ink to test system (if used):		☐ air link	☐ cable connection	☒ none
EUT-grounding		☒ none	☐ with power supply	☐ additional connection
Equipment set up		☒ table top 1.5m height		☐ floor standing
Climatic conditions		Temperature: (22±3°C)		Rel. humidity: (40±20)%
Spectrum-Analyzer settings	Scan frequency range:	☐ 1 – 18 GHz ☐ 18 – 25 GHz ☐ 18 – 40 GHz ☒ other: see diagrams		
	Scan-Mode	☐ 6 dB EMI-Receiver Mode ☒ 3 dB Spectrum analyser Mode		
	Detector	Peak and Average		
	RBW/VBW	Left band-edge: 100kHz/300kHz Right band-edge: 1 MHz / 3 MHz		
	Mode:	Repetitive-Scan, max-hold		
	Scan step	40kHz or 400 kHz		
	Sweep-Time	Coupled – calibrated display if CW signal otherwise adapted to EUT's individual duty-cycle		
General measurement procedures		Please see chapter "Test system set-up for radiated electric field measurements above 1 GHz" for general measurements procedures in anechoic chamber.		

5.6.4. Measurement Method

For uncritical results where a measurement resolution bandwidth of 1MHz can clearly show the compliance without influencing the results, a field strength measurement was performed to show compliance.

For critical results a Marker-Delta marker method was used for showing compliance to restricted bands. The method is according ANSI C63.10:2013, Chapter 6.10.6 "Marker-Delta method",. The method consists of three independent steps:

1. Step: Prior to the measurement the fundamental radiated In-Band field strength was performed. The determined value is used as reference value.

2. Step: Second step consist of finding the relative attenuation between the fundamental emission and the maximum local out-of-band emission (within 2 MHz range around the band edge either on the band-edge directly or some modulation product if the level is greater than that on the band-edge) when measured with lower resolution bandwidth.

3. Step: The delta value recorded in step 2 will be subtracted from value recorded in step 1, thus giving the required field strength at the band-edge. This value must fulfil the requirements for radiated spurious emissions in restricted bands in FCC §15.205 with the general limits of FCC §15.209 .

5.6.5. EUT settings

The EUT was instructed to send with maximum power (if adjustable) according to applicants instructions.

5.6.6. Results: for non-restricted bands near-by

5.6.6.1. Non-restricted bands near-by - limits according FCC §15.247

Diagram no.	Channel no.	Restricted band ?	Fundamental Value [dBuV/m]		Band-Edge Value [dBuV/m]	Difference [dB]	Limit [dBc]	Margin [dB]	Verdict	Remark: Mode-B.W.-Data Rate-Power
			Peak -Value	Average -Value + Duty Cycle Correction	Peak-Value					
9.02a_lay	0	NO	86,41	83,82	47,51	38,91	20,00	18,91	**PASS**	3Mbps
9.02a_sta	0	NO	87,70	83,91	47,86	39,84	20,00	19,84	**PASS**	3Mbps

Remark: Duty-Cycle correction of = 1.11dB used

5.6.6.2. Restricted bands near-by §15.205 with limits accord. FCC §15.209

Diagram no.	Channel no.	Restricted band ?	Fundamental Value [dBuV/m]		Band-Edge Value [dBuV/m]		Limits [dBuV/m]		Margin [dB]		Verdict	Remark: Mode-B.W.-Data Rate-Power
			Peak -Value	Average -Value + Duty Cycle Correction	Peak -Value	Average -Value + Duty Cycle Correction	Peak -Value	Average -Value	Peak	Average		
9.02b_lay	78	YES	93,11	91,23	59,30	50,15	74,00	54,00	14,70	3,86	**PASS**	3Mbps
9.02b_sta	78	YES	91,78	90,23	58,17	49,58	74,00	54,00	15,83	4,43	**PASS**	3Mbps

Remark: Duty-Cycle correction of = 1.11dB used

5.7. Measurement uncertainties

The reported uncertainties are calculated based on the standard uncertainty multiplied with the appropriate coverage factor **k**, such that a confidence level of approximately 95% is achieved.
For uncertainty determination, each component used in the concrete measurement set-up was taken in account and it's contribution to the overall uncertainty according it's statistical distribution calculated.

Following table shows expectable uncertainties for each measurement type performed.

RF-Measurement	Reference	Frequency range	Calculated uncertainty based on a confidence level of 95%						Remarks
Conducted emissions (U_{CISPR})	CISPR 16-2-1	9 kHz - 150 kHz 150 kHz - 30 MHz	4.0 dB 3.6 dB						-
Radiated emissions Enclosure	CISPR 16-2-3	30 MHz - 1 GHz 1 GHz - 18 GHz	4.2 dB 5.1 dB						E-Field
Disturbance power	CISPR 16-2-2	30 MHz - 300 MHz	-						-
Power Output radiated	-	30 MHz - 4 GHz	3.17 dB						Substitution method
Power Output conducted	-	Set-up No.	Cel-C1	Cel-C2	BT1	W1	W2	--	
		9 kHz - 12.75 GHz	N/A	0.60	0.7	0.25	N/A	--	-
		12.75 - 26.5GHz	N/A	0.82	--	N/A	N/A	--	
Conducted emissions on RF-port	-	9 kHz - 2.8 GHz	0.70	N/A	0.70	N/A	0.69	--	N/A - not applicable
		2.8 GHz - 12.75GHz	1.48	N/A	1.51	N/A	1.43	--	
		12.75 GHz - 18GHz	1.81	N/A	1.83	N/A	1.77	--	
		18 GHz - 26.5GHz	1.83	N/A	1.85	N/A	1.79	--	
Occupied bandwidth	-	9 kHz - 4 GHz	0.1272 ppm (Delta Marker)						Frequency error
			1.0 dB						Power
Emission bandwidth	- -	9 kHz - 4 GHz	0.1272 ppm (Delta Marker)						Frequency error
			See above: 0.70 dB						Power
Frequency stability	-	9 kHz - 20 GHz	0.0636 ppm						-
Radiated emissions Enclosure	-	150 kHz - 30 MHz 30 MHz - 1 GHz 1 GHz - 20 GHz	5.0 dB 4.2 dB 3.17 dB						Magnetic field E-field Substitution

Table: measurement uncertainties, valid for conducted/radiated measurements

6. Abbreviations used in this report

The abbreviations	
ANSI	American National Standards Institute
AV , AVG, CAV	Average detector
EIRP	Equivalent isotropically radiated power, determined within a separate measurement
EGPRS	Enhanced General Packet Radio Service
EUT	Equipment Under Test
FCC	Federal Communications Commission, USA
IC	Industry Canada
n.a.	not applicable
Op-Mode	Operating mode of the equipment
PK	Peak
RBW	resolution bandwidth
RF	Radio frequency
RSS	Radio Standards Specification, Dokuments from Industry Canada
Rx	Receiver
TCH	Traffic channel
Tx	Transmitter
QP	Quasi peak detector
VBW	Video bandwidth
ERP	Effective radiated power

7. Accreditation details of CETECOM's laboratories and test sites

Ref.-No.	Accreditation Certificate	Valid for laboratory area or test site	Accreditation Body
-	D-PL-12047-01-01	All laboratories and test sites of CETECOM GmbH, Essen	DAkkS, Deutsche Akkreditierungsstelle GmbH
337 487 558 348 348	736496	Radiated Measurements 30 MHz to 1 GHz, 3 m / 10 m (OATS) Radiated Measurements 30 MHz to 1 GHz, 3 m (SAR) Radiated Measurements above 1 GHz, 3 m (FAR) Mains Ports Conducted Interference Measurements Telecommunication Ports Conducted Interference Measurem.	FCC, Federal Communications Commission Laboratory Division, USA (MRA US-EU 0003)
337 487 550 558	3462D-1 3462D-2 3462D-2 3462D-3	Radiated Measurements 30 MHz to 1 GHz, 3 m / 10 m (OATS) Radiated Measurements 30 MHz to 1 GHz, 3 m (SAR) Radiated Measurements 1 GHz to 6 GHz, 3 m (SAR) Radiated Measurements above 1 GHz, 3 m (FAR)	ISED, Industry Canada Certification and Engineering Bureau
487 550 348 348	R-2666 G-301 C-2914 T-1967	Radiated Measurements 30 MHz to 1 GHz, 3 m (SAR) Radiated Measurements 1 GHz to 6 GHz, 3 m (SAR) Mains Ports Conducted Interference Measurements Telecommunication Ports Conducted Interference Measurem.	VCCI, Voluntary Control Council for Interference by Information Technology Equipment, Japan
OATS = Open Area Test Site, SAR = Semi Anechoic Room, FAR = Fully Anechoic Room			

8. Instruments and Ancillary

The “Ref.-No” in the left column of the following tables allows the clear identification of the laboratory equipment.

8.1. Test software and firmware of equipment

Ref.-No.	Equipment	Type	Serial-No.	Version of Firmware or Software during the test
001	EMI Test Receiver	ESS	825132/017	Firm.= 1.21 , OTP=2.0, GRA=2.0
012	Signal Generator (EMS-cond.)	SMY 01	839069/027	Firm.= V 2.02
013	Power Meter (EMS cond.)	NRVD	839111/003	Firm.= V 1.51
017	Digital Radiocommunication Tester	CMD 60 M	844365/014	Firmware = V 3.52 .22.01.99, DECT = D2.87 13.01.99
053	Audio Analyzer	UPA3	860612/022	Firm. V 4.3
119	RT Harmonics Analyzer dig. Flickermeter	B10	G60547	Firm.= V 3.1DHG
140	Signal Generator	SMHU	831314/006	Firm.= 3.21
261	Thermal Power Sensor	NRV-Z55	825083/0008	EPROM-Datum 02.12.04, SE EE 1 B
262	Power Meter	NRV-S	825770/0010	Firm.= 2.6
263	Signal Generator	SMP 04	826190/0007	Firm.=3.21
295	Racal Digital Radio Test Set	6103	1572	UNIT Firmware= 4.04, SW-Main=4.04, SW-BBP=1.04, SW-DSP=1.02, Hardboot=1.02, Softboot=2.02
298	Univ. Radio Communication Tester	CMU 200	832221/091	R&S Test Firmware =3.53 /3.54 (current Testsoftw. f. all band used
323	Digital Radiocommunication Tester	CMD 55	825878/0034	Firm.= 3.52 .22.01.99
335	CTC-EMS-Conducted	System EMS Conducted	-	EMC 32 V 8.52
340	Digital Radiocommunication Tester	CMD 55	849709/037	Firm.= 3.52 .22.01.99
355	Power Meter	URV 5	891310/027	Firm.= 1.31
365	10V Insertion Unit 50 Ohm	URV5-Z2	100880	Eprom Data = 31.03.08
366	Ultra Compact Simulator	UCS 500 M4	V0531100594	Firm. UCS 500=001925/3.06a02, rc=ISMIEC 4.10
371	Bluetooth Tester	CBT32	100153	CBT V5,30+ SW-Option K55, K57
377	EMI Test Receiver	ESCS 30	100160	Firm.= 2.30, OTP= 02.01, GRA= 02.36
378	Broadband RF Field Monitor	RadiSense III	03D00013SNO-08	Firm.= V.03D13
389	Digital Multimeter	Keithley 2000	0583926	Firm. = A13 (Mainboard) A02 (Display)
392	Radio Communication Tester	MT8820A	6K00000788	Firm.= 4.50 #005, IPL=4.01#001,OS=4.02#001, GSM=4.41#013, W-CDMA= 4.54#004, scenario= 4.52#002
436	Univ. Radio Communication Tester	CMU 200	103083	R&S Test Firmware Base=5.14, Mess-Software= GSM:5.14 WCDMA:5.14 (current Testsoftw. F. all band
441	CTC-SAR-EMI Cable Loss	System EMI field (SAR)	-	EMC 32 Version 8.52
442	CTC-SAR-EMS	System EMS field (SAR)	-	EMC 32 Version 8.40
443	CTC-FAR-EMI-RSE	System CTC-FAR-EMI-RSE	-	Spuri 7.2.5 or EMC 32 Ver. 9.15.00
444	CTC-FAR-EMS field	System-EMS-Field (FAR)	-	EMC 32 Version 9.15.00
460	Univ. Radio Communication Tester	CMU 200	108901	R&S Test Firmware Base=5.14, GSM=5.14 WCDMA=5.14 (current Testsoftw.,f. all band to be used,
489	EMI Test Receiver	ESU40	1000-30	Firmware=4.43 SP3, Bios=V5.1-16-3, Spec. =01.00
491	ESD Simulator dito	ESD dito	dito307022	V 2.30
524	Voltage Drop Simulator	VDS 200	0196-16	Software Nr: 000037 Version V4.20a01
526	Burst Generator	EFT 200 A	0496-06	Software Nr. 000034 Version V2.32
527	Micro Pulse Generator	MPG 200 B	0496-05	Software-Nr. 000030 Version V2.43
528	Load Dump Simulator	LD 200B	0496-06	Software-Nr. 000031 Version V2.35a01
546	Univ. Radio Communication Tester	CMU 200	106436	R&S Test Firmware Base=5.14, GSM=5.14 WCDMA=5.14 (current Testsoftw.,f. all band to be used
547	Univ. Radio Communication Tester	CMU 200	835390/014	R&S Test Firmware Base=V5.1403 (current Testsoftw., f. all band used, GSM = 5.14 WCDMA: = 5.14
584	Spectrum Analyzer	FSU 8	100248	2.82_SP3
597	Univ. Radio Communication Tester	CMU 200	100347	R&S Test Firmware Base=5.01, GSM=5.02 WCDMA= not installed, Mainboard= µP1=V.850
598	Spectrum Analyzer	FSEM 30	831259/013	Firmware Bios 3.40 , Analyzer 3.40 Sp 2
607	Signal Generator	SMR 20	832033/011	V1.25
620	EMI Test Receiver	ESU 26	100362	4.43_SP3
642	Wideband Radio Communication Tester	CMW 500	126089	Setup V03.26, Test programm component V03.02.20
670	Univ. Radio Communication Tester	CMU 200	106833	µP1 =V8.50, Firmware = V.20
689	Vector Signal Generator	SMU200	100970	02.20.360.142
692	Bluetooth Tester	CBT 32	100236	CBT V 5.40, FW: V.2.41 (FPGA Digital, V. 3.09 FPGA RF)

8.1.1. Single instruments and test systems

Ref.-No.	Equipment	Type	Serial-No.	Manufacturer	Interval of calibration	Remark	Cal due
001	EMI Test Receiver	ESS	825132/017	Rohde & Schwarz	12 M	-	16.05.2018
005	AC - LISN (50 Ohm/50µH, test site 1)	ESH2-Z5	861741/005	Rohde & Schwarz	12 M	-	15.05.2018
007	Single-Line V-Network (50 Ohm/5µH)	ESH3-Z6	892563/002	Rohde & Schwarz	12 M	-	17.05.2018
009	Power Meter (EMS-radiated)	NRV	863056/017	Rohde & Schwarz	24 M	-	15.05.2019
016	Line Impedance Simulating Network	Op. 24-D	B6366	Spitzenberger+Spies	36 M	-	30.05.2019
021	Loop Antenna (H-Field)	6502	9206-2770	EMCO	36 M	-	30.04.2018
030	Loop Antenna (H-field)	HFH-Z2	879604/026	Rohde & Schwarz	36 M	-	30.04.2018
033	RF-current probe (100kHz-30MHz)	ESH2-Z1	879581/18	Rohde & Schwarz	24 M	-	15.05.2019
057	relay-switch-unit (EMS system)	RSU	494440/002	Rohde & Schwarz	pre-m	1a	
060	power amplifier (DC-2kHz)	PAS 5000	B6363	Spitzenberger+Spies	-	3	
086	DC - power supply, 0 -10 A	LNG 50-10	-	Heinzinger Electronic	pre-m	2	
087	DC - power supply, 0 -5 A	EA-3013 S	-	Elektro Automatik	pre-m	2	
091	USB-LWL-Converter	OLS-1	007/2006	Ing. Büro Scheiba	-	4	
099	passive voltage probe	ESH2-Z3	299.7810.52	Rohde & Schwarz	36 M	-	30.04.2018
100	passive voltage probe	Probe TK 9416	without	Schwarzbeck	36 M	-	30.04.2018
110	USB-LWL-Converter	OLS-1	-	Ing. Büro Scheiba	-	4	
119	RT Harmonics Analyzer dig. Flickermeter	B10	G60547	BOCONSULT	36 M	-	30.05.2019
133	horn antenna 18 GHz (Meas 1)	3115	9012-3629	EMCO	36 M	1c	10.03.2020
134	horn antenna 18 GHz (Subst 2)	3115	9005-3414	EMCO	36 M	-	10.03.2020
136	adjustable dipole antenna (Dipole 1)	3121C-DB4	9105-0697	EMCO	36 M	-	30.04.2018
140	Signal Generator	SMHU	831314/006	Rohde & Schwarz	24 M	-	30.05.2018
248	attenuator	SMA 6dB 2W	-	Radiall	pre-m	2	
249	attenuator	SMA 10dB 10W	-	Radiall	pre-m	2	
252	attenuator	N 6dB 12W	-	Radiall	pre-m	2	
256	attenuator	SMA 3dB 2W	-	Radiall	pre-m	2	
257	hybrid	4031C	04491	Narda	pre-m	2	
260	hybrid coupler	4032C	11342	Narda	pre-m	2	
261	Thermal Power Sensor	NRV-Z55	825083/0008	Rohde & Schwarz	24 M	-	30.05.2018
262	Power Meter	NRV-S	825770/0010	Rohde & Schwarz	24 M	-	30.05.2018
263	Signal Generator	SMP 04	826190/0007	Rohde & Schwarz	36 M	-	30.05.2019
265	peak power sensor	NRV-Z33, Model 04	840414/009	Rohde & Schwarz	24 M	-	30.05.2018
266	Peak Power Sensor	NRV-Z31, Model 04	843383/016	Rohde & Schwarz	24 M	-	30.05.2018
267	notch filter GSM 850	WRCA 800/960-6EEK	9	Wainwright GmbH	pre-m	2	
270	termination	1418 N	BB6935	Weinschel	pre-m	2	
271	termination	1418 N	BE6384	Weinschel	pre-m	2	
272	attenuator (20 dB) 50 W	Model 47	BF6239	Weinschel	pre-m	2	
273	attenuator (10 dB) 100 W	Model 48	BF9229	Weinschel	pre-m	2	
274	attenuator (10 dB) 50 W	Model 47 (10 dB) 50 W	BG0321	Weinschel	pre-m	2	
275	DC-Block	Model 7003 (N)	C5129	Weinschel	pre-m	2	
276	DC-Block	Model 7006 (SMA)	C7061	Weinschel	pre-m	2	
279	power divider	1515 (SMA)	LH855	Weinschel	pre-m	2	
298	Univ. Radio Communication Tester	CMU 200	832221/091	Rohde & Schwarz	pre-m	3	
300	AC LISN (50 Ohm/50µH, 1-phase)	ESH3-Z5	892 239/020	Rohde & Schwarz	12 M	-	17.05.2018
301	attenuator (20 dB) 50W, 18GHz	47-20-33	AW0272	Lucas Weinschel	pre-m	2	
302	horn antenna 40 GHz (Meas 1)	BBHA9170	155	Schwarzbeck	36 M	-	14.03.2020
303	horn antenna 40 GHz (Subst 1)	BBHA9170	156	Schwarzbeck	36 M	-	20.03.2020
331	Climatic Test Chamber -40/+180 Grad	HC 4055	43146	Heraeus Vötsch	24 M	-	30.10.2018
341	Digital Multimeter	Fluke 112	81650455	Fluke	24 M	-	30.05.2018
342	Digital Multimeter	Voltcraft M-4660A	IB 255466	Voltcraft	24 M	-	17.05.2019
347	laboratory site	radio lab.	-	-	-	5	
348	laboratory site	EMI conducted	-	-	-	5	
354	DC - Power Supply 40A	NGPE 40/40	448	Rohde & Schwarz	pre-m	2	
355	Power Meter	URV 5	891310/027	Rohde & Schwarz	24 M	-	30.05.2018
357	power sensor	NRV-Z1	861761/002	Rohde & Schwarz	24 M	-	24.05.2019
371	Bluetooth Tester	CBT32	100153	R&S	36 M	-	30.05.2019
373	Single-Line V-Network (50 Ohm/5µH)	ESH3-Z6	100535	Rohde & Schwarz	12 M	-	17.05.2018
377	EMI Test Receiver	ESCS 30	100160	Rohde & Schwarz	12 M	-	15.05.2018
392	Radio Communication Tester	MT8820A	6K00000788	Anritsu	12 M	-	18.05.2018
405	Thermo-/Hygrometer	OPUS 10 THI	126.0604.0003.3.3.3.22	LUFFT Mess u. Regeltechnik	24 M	-	30.03.2019
431	Model 7405	Near-Field Probe Set	9305-2457	EMCO	-	4	
436	Univ. Radio Communication Tester	CMU 200	103083	Rohde & Schwarz	12 M	-	24.05.2018
439	UltraLog-Antenna	HL 562	100248	Rohde & Schwarz	36 M	-	10.03.2020
443	CTC-FAR-EMI-RSE	System CTC-FAR-EMI-RSE	-	ETS-Lindgren / CETECOM	12 M	5	30.09.2017
454	Oscilloscope	HM 205-3	9210 P 29661	Hameg	-	4	
456	DC-Power supply 0-5 A	EA 3013 S	207810	Elektro Automatik	pre-m	2	
459	DC -Power supply 0-5 A , 0-32 V	EA-PS 2032-50	910722	Elektro Automatik	pre-m	2	
463	Universal source	HP3245A	2831A03472	Agilent	-	4	
466	Digital Multimeter	Fluke 112	89210157	Fluke USA	24 M	-	30.05.2018
467	Digital Multimeter	Fluke 112	89680306	Fluke USA	36 M	-	30.04.2018
468	Digital Multimeter	Fluke 112	90090455	Fluke USA	36 M	-	30.04.2018
477	ReRadiating GPS-System	AS-47	-	Automotive Cons. Fink	-	3	
480	power meter (Fula)	NRVS	838392/031	Rohde & Schwarz	24 M	-	16.05.2019

Ref.-No.	Equipment	Type	Serial-No.	Manufacturer	Interval of calibration	Remark	Cal due
482	filter matrix	Filter matrix SAR 1	-	CETECOM (Brl)	-	1d	
487	System CTC NSA-Verification SAR-EMI	System EMI field (SAR) NSA	-	ETS Lindgren / CETECOM	24 M	-	31.09.2017
489	EMI Test Receiver	ESU40	1000-30	Rohde & Schwarz	12 M	-	18.05.2019
502	band reject filter	WRCG 1709/1786-1699/1796-	SN 9	Wainwright	pre-m	2	
503	band reject filter	WRCG 824/849-814/859-	SN 5	Wainwright	pre-m	2	
517	relais switch matrix	HF Relais Box Keithley	SE 04	Keithley	pre-m	2	
523	Digital Multimeter	L4411A	MY46000154	Agilent	24 M	-	18.05.2019
529	6 dB Broadband resistive power divider	Model 1515	LH 855	Weinschel	pre-m	2	
530	10 dB Broadband resistive power divider	R 416110000	LOT 9828	-	pre-m	2	
546	Univ. Radio Communication Tester	CMU 200	106436	R&S	12 M	-	30.03.2018
547	Univ. Radio Communication Tester	CMU 200	835390/014	Rohde & Schwarz	12 M	-	30.04.2017
549	Log.Per-Antenna	HL025	1000060	Rohde & Schwarz	36/12 M	-	31.07.2018
574	Biconilog Hybrid Antenna	BTA-L	980026L	Frankonia	36/12 M	-	31.03.2019
584	Spectrum Analyzer	FSU 8	100248	Rohde & Schwarz	pre-m	-	
597	Univ. Radio Communication Tester	CMU 200	100347	Rohde & Schwarz	pre-m	-	
600	power meter	NRVD (Reserve)	834501/018	Rohde & Schwarz	24 M	-	17.05.2019
601	medium-sensitivity diode sensor	NRV-Z5 (Reserve)	8435323/003	Rohde & Schwarz	24 M	-	15.05.2019
602	peak power sensor	NRV-Z32 (Reserve)	835080	Rohde & Schwarz	24 M	-	
611	DC power supply	E3632A	KR 75305854	Agilent	pre-m	2	
612	DC power supply	E3632A	MY 40001321	Agilent	pre-m	2	
613	Attenuator	R416120000 20dB 10W	Lot. 9828	Radiall	pre-m	2	
616	Digitalmultimeter	Fluke 177	88900339	Fluke	24 M	-	30.05.2018
617	Power Splitter/Combiner	ZFSC-2-2-S+	S F987001108	Mini Circuits	-	2	
618	Power Splitter/Combiner	50PD-634	600994	JFW Industries USA	-	2	
619	Power Splitter/Combiner	50PD-634	600995	JFW Industries, USA	-	3	
620	EMI Test Receiver	ESU 26	100362	Rohde-Schwarz	12 M	-	16.05.2018
621	Step Attenuator 0-139 dB	RSP	100017	Rohde & Schwarz	pre-m	2	
625	Generic Test Load USB	Generic Test Load USB	-	CETECOM	-	2	
627	data logger	OPUS 1	201.0999.9302.6.4.1.43	G. Lufft GmbH	24 M	-	30.03.2019
634	Spectrum Analyzer	FSM (HF-Unit)	826188/010	Rohde & Schwarz	pre-m	2	
637	High Speed HDMI with Ethernet 1m	HDMI cable with Ethernet 1m	-	KogiLink	-	2	
638	HDMI Kabel with Ethernet 1,5 m flach	HDMI cable with Ethernet	-	Reichelt	-	2	
640	HDMI cable 2m rund	HDMI cable 2m rund	-	Reichelt	-	2	
641	HDMI cable with Ethernet	Certified HDMI cable with	-	PureLink	-	2	
642	Wideband Radio Communication Tester	CMW 500	126089	Rohde&Schwarz	12 M	-	24.05.2018
644	Amplifierer	ZX60-2534M+	SN865701299	Mini-Circuits	-	-	
670	Univ. Radio Communication Tester	CMU 200	106833	Rohde & Schwarz	24 M	-	30.05.2018
671	DC-power supply 0-5 A	EA-3013S	-	Elektro Automatik	pre-m	2	
678	Power Meter	NRP	101638	Rohde&Schwarz	pre-m	-	
683	Spectrum Analyzer	FSU 26	200571	Rohde & Schwarz	12 M	-	17.05.2018
686	Field Analyzer	EHP-200A	160WX30702	Narda Safety Test Solutions	24 M	-	29.03.2019
687	Signal Generator	SMF 100A	102073	Rohde&Schwarz	12 M	-	17.05.2018
688	Pre Amp	JS-18004000-40-8P	1750117	Miteq	pre-m	-	
690	Spectrum Analyzer	FSU	100302/026	Rohde&Schwarz	12 M	-	16.05.2018
691	OSP120 Base Unit	OSP120	101183	Rohde & Schwarz	12 M	-	22.05.2018
692	Bluetooth Tester	CBT 32	100236	Rohde & Schwarz	36 M	-	29.05.2020
697	Power Splitter	ZN4PD-642W-S+	165001445	Mini-Circuits	-	2	
703	INNCO Antennen Mast	MA 4010-KT080-XPET-ZSS3	MA4170-KT100-XPET-	INNCO	pre-m	-	
704	INNCON Controller	CO 3000-4port	CO3000/933/38410516/L	INNCO Systems GmBh	pre-m	-	
711	Harmonic Mixer 90 GHz - 140GHz	RPG FS-Z140	101004	RPG	12 M	-	22.02.2018
712	Harmonic Mixer 75 GHz - 110GHz	FS-Z110	101468	Rohde & Schwarz	12 M	-	22.02.2018
713	Harmonic Mixer, 50 GHz - 75GHz	FS-Z75	101022	Rohde & Schwarz	12 M	-	22.05.2018
714	Signal Analyzer 67GHz	FSW67	104023	Rohde & Schwarz	24 M	-	03.03.2019
715	Harmonic Mixer, 140 GHz - 220GHz	FS-Z220	101009	RPG Radiometer Physics	12 M	-	03.08.2018
716	Harmonic Mixer 220 GHz to 325 GHZ	FS-Z325	101005	RPG Radiometer Physics	12 M	-	13.02.2018
747	Spectrum Analyzer	FSU 26	200152	Rohde & Schwarz	12 M	-	18.05.2018
748	Pickett-Potter Horn Antenna	FH-PP 4060	010001	Radiometer Physiscs	-	-	
749	Pickett-potter Horn Antenna	FH-PP 60-90	010003	Radiometer Physics	-	-	
750	Pickett-Potter Horn Antenna	FH-PP 140-220	010011	Radiometer Physics	-	-	

8.2. Legend

Note / remarks		Calibrated during system calibration:
	1a	System CTC-SAR-EMS (Ref.-No. 442)
	1b	System-CTC-EMS-Conducted (Ref.-No. 335)
	1c	System CTC-FAR-EMI-RSE (Ref.-No . 443)
	1d	System CTC-SAR-EMI (Ref.-No . 441)
	1e	System CTC-OATS (EMI radiated) (Ref.-No. 337)
	1 f	System CTC-CTIA-OTA (Ref.-No . 420)
	1 g	System CTC-FAR-EMS (Ref.-No . 444)
	2	Calibration or equipment check immediately before measurement
	3	Regulatory maintained equipment for functional check or support purpose
	4	Ancillary equipment without calibration e.g. mechanical equipment or monitoring equipment
	5	Test System

Interval of calibration	12 M	12 month
	24 M	24 month
	36 M	36 month
	24/12 M	Calibration every 24 months, between this every 12 months internal validation
	36/12 M	Calibration every 36 months, between this every 12 months internal validation
	Pre-m	Check before starting the measurement
	-	Without calibration

9. Versions of test reports (change history)

Version	Applied changes	Date of release
--	Initial release	2018-07-23