T E S T R E P O R T
No.: 18-1-0048201T01a-C1

According to:

FCC Regulations
Part 15.205
Part 15.209
Part 15.407

ISED-Regulations
RSS-Gen, Issue 4
RSS-247, Issue 2

for

Robert Bosch Car Multimedia GmbH

AIVISBX0
Navigationsystem with WLAN and Bluetooth

FCC ID: YBN-AIVISBX0
ISED: 9595A-AIVISBX0

Laboratory Accreditation and Listings		
Accredited EMC-Test Laboratory	Industry Canada Reg. No.: 3462D-1 Reg. No.: 3462D-2 Reg. No.: 3462D-3	Voluntary Controls for Electromagnetic Emissions Reg. No.:4452, C-20009, T-20006, G-20013
AUTHORIZED RF LABORATORY	Lab Code: 20011130-00	MRA US-EU 0003
accredited according to DIN EN ISO/IEC 17025		

CETECOM GmbH
Laboratory Radio Communications & Electromagnetic Compatibility
Im Teelbruch 116 • 45219 Essen • Germany
Registered in Essen, Germany, Reg. No.: HRB Essen 8984
Tel.: + 49 (0) 20 54 / 95 19-954 • Fax: + 49 (0) 20 54 / 95 19-964
E-mail: info@cetecom.com • Internet: www.cetecom.com

Laboratory Accreditation and Listings

The test results relate only to the individual items that have been tested. This report shall not be reproduced in parts without the written approval of the testing laboratory © Copyright: All rights reserved by CETECOM

Table of Contents

1. SUMMARY OF TEST RESULTS 3

1.1. Tests measurement overview according to US CFR Title 47, Subpart 15C 3
1.2. Attestation: 6

2. ADMINISTRATIVE DATA 7

2.1. Identification of the testing laboratory 7
2.2. Test location 7
2.3. Organizational items 7
2.4. Applicant's details 7
2.5. Manufacturer's details 7

3. EQUIPMENT UNDER TEST (EUT) 8

3.1. Certification Data of Main EUT declared by Applicant 8
3.2. WLAN 5 GHz 802.11a/n Technical Data Of Main EUT as Declared by Applicant 11
3.3. EUT: Type, S/N etc. and short descriptions used in this test report 12
3.4. Auxiliary Equipment (AE): Type, S/N etc. and short descriptions 12
3.5. EUT set-ups 12
3.6. EUT operating modes 13
3.7. Worst case identification 15

4. DESCRIPTION OF TEST SYSTEM SET-UP'S 16

4.1. Test system set-up for conducted measurements on antenna port 16
4.2. Test system set-up for radiated magnetic field measurements below 30 MHz 18
4.3. Test system set-up for radiated electric field measurement 30 MHz to 1 GHz 19
4.4. Test system set-up for radiated electric field measurement above 1 GHz 20

5. MEASUREMENTS 21

5.1. Duty-Cycle 21
5.2. General Limit – Maximum power output conducted and maximum EIRP power 22
5.3. RF Parameter - 26 dB and 99% occupied Bandwidth 28
5.4. RF Parameter – Peak Power Spectral Density (PPSD) 31
5.5. RF-Parameter – Frequency Stability 34
5.6. General Limit - Radiated field strength emissions below 30 MHz 36
5.7. General Limit - Radiated field strength emissions, 30 MHz - 1 GHz 39
5.8. General Limit - Radiated emissions, above 1 GHz 43
5.9. RF-Parameter - Radiated Band-Edge compliance measurements 47
5.10. Measurement uncertainties 50

6. ABBREVIATIONS USED IN THIS REPORT 51

7. ACCREDITATION DETAILS OF CETECOM'S LABORATORIES AND TEST SITES 51

8. INSTRUMENTS AND ANCILLARY 52

8.1. Test software and firmware of equipment 52
8.2. Single instruments and test systems 53
8.3. Legend 55

9. VERSIONS OF TEST REPORTS (CHANGE HISTORY) 55

Table of annex

	Total pages
Annex 1: Test result diagrams (separate document) **CETECOM-TR18-1-0048201T01a-A1**	**264**
Annex 2: External photographs of EUT (separate document) **CETECOM- TR18-1-0048201T02a-A2**	**8**
Annex 3: Internal photographs of EUT (separate document supplied by customer)	**--**
Annex 4: Test set-up photographs (separate document) **CETECOM- TR18-1-0048201T02a -A4**	**8**

1. Summary of test results

The test results apply exclusively to the test samples as presented in this report. The CETECOM GmbH does not assume responsibility for any conclusions and generalizations taken in conjunction with other specimens or samples of the type of the item presented to tests. Also we refer on special conditions which the applicant should fulfill according §2.927 to §2.948, special focus regarding modification of the equipment and availability of sample equipment for market surveillance tests.

The presented Equipment Under Test (in this report, hereinafter referred as EUT) supports radiofrequency technologies with WLAN technology and operating frequency range at 5.150 to 5.850 GHz according to IEE 802.11 a. The EUT integrates a WLAN transmitter. Other implemented wireless technologies were not considered within this test report.

Following test cases have been performed to show compliance with valid Part 15.407/15.209 of the FCC CFR Title 47 Rules, Edition 2017 and ISED RSS-247 Issue 2/RSS-Gen Issue 4 standards.

1.1. Tests measurement overview according to US CFR Title 47, Subpart 15C

Test cases	Port	References and Limits			EUT set-up	EUT op. mode	Result
		FCC Standard	RSS Standard	Test limit			
TX-Mode							
99% occupied bandwidth	Antenna terminal (conducted)	2.1049(h)	RSS-Gen, Issue 4 Chapter 6.6	99% Power bandwidth	2	1	Pass
26 dB bandwidth	Antenna terminal (conducted)	§15.303 + §15.407(a) (2) (5)	RSS-Gen, Issue 4 Chapter 6.6	26 dB spectral density bandwidth	2	1	Pass
Duty-Cycle	Antenna terminal (conducted)	KDB789033 + ANSI C63.10:2013	KDB789033 + ANSI C63.10:2013	No Limit Criteria	2	1	Pass
Transmitter frequency stability	Antenna terminal (conducted)	§ 2.1055 + §15.407(g)	RSS-Gen, Issue 4: Chapter 6.11	Operation within designated operational band	2	1	Pass

Maximum output power	Antenna terminal (conducted)	§15.407(a) (1)(iv) 5.15-5.25 GHz Client devices (2) 5.25-5.35 GHz & 5.47-5.725 GHz (3) 5.725-5.85 GHz	RSS-247, Issue 2 Chapter 6.2.1.1 6.2.2.1 6.2.3.1 6.2.4.1	Power Limits (if Antenna Gain < 6 dBi) 250 mW lesser of 250mW or 11dBm+10logB 1 W	2	1	Pass
Peak Power Spectral density	Antenna terminal (conducted)	§15.407(a) (1)(iv) 5.15-5.25 GHz Client devices (2) 5.25-5.35 GHz & 5.47-5.725 GHz (3) 5.725-5.85 GHz	RSS-247, Issue 2 Chapter 6.2.1.1 6.2.2.1 6.2.3.1 6.2.4.1	Power Spectral Density Limits (if Antenna Gain < 6 dBi) 11dBm/MHz 11dBm/MHz 30dBm/500kHz	2	1	Pass
Maximum e.i.r.p. power	Antenna terminal (conducted) + Antenna Gain	§15.407(a) (1)(iv) 5.15-5.25 GHz Client devices (2) 5.25-5.35 GHz & 5.47-5.725 GHz (3) 5.725-5.85 GHz	RSS-247, Issue 2 Chapter 6.2.1.1 6.2.2.1 6.2.3.1 6.2.4.1	e.i.r.p. Limits (if Antenna Gain < 6 dBi) 250 mW + 6 dBi lesser of 250mW or 11dBm+10logB + 6 dBi 1 W + 6 dBi	2	1	Pass (calculated)
Antenna gain information	Antenna terminal (conducted)	§15.407(a) (1)(2)(3)	RSS-247, Issue 2 chapter 6.2.1.1 6.2.2.1 6.2.3.1 6.2.4.1	< 6dBi or if Antenna directional Gain > 6dBi reduction of Max. power & power spectral density by the amount in dB that the directional gain of the antenna exceeds 6 dBi	--	--	Measured Antenna Gain.

General field strength emissions within restricted bands + Band-Edge compliance radiated	Enclosure + Inter-connecting cables (radiated)	§15.407(b) (1)(2)(3)(4)(5)(6)(7)(8) §15.205 + §15.209	RSS-Gen., Issue 4 + RSS-247, Issue 2 Chapter 6.2.1.2 , 6.2.2.2 6.2.3.2, + 6.2.4.2 RSS-Gen., Issue 4 + RSS-247, Issue 2 Chapter 6.2.1.2 , 6.2.2.2 6.2.3.2, + 6.2.4.2	5150-5250 MHz | 5250-5350 MHz 5470-5725 MHz all emissions outside operating band shall not exceed -27 dBm/MHz e.i.r.p. 5725-5850 MHz Spectrum Mask acc. to (4)(i) Restricted band limits + General field strength limits	1	1	Pass
Transmit power control + Dynamic frequency selection (DFS)	Antenna terminal (conducted)	§15.407 (h1)(h2)	RSS-Gen., Issue 4 + RSS-247, Issue 2 Chapter 6.3	Requirements: Masters Active clients Passive clients	2	3	Pass *1)
Discontinuous transmissions + Device security	FIRMWARE	§15.407(c) + §15.407(i)	RSS-247, Issue 2 Chapter 6.4 a + b + c	No transmissions in case of either absence of information to transmit or operational failure + Protection of firmware by unauthorized parties	--	--	Not tested Applicants declaration of implementation
AC-Power Lines Conducted Emissions	AC-Power lines or Battery Charger	§15.207(a)	RSS-Gen, Issue 4: Chapter 8.8 Table 3	AC Power line conducted limits	--	--	Not applicable

Remark 1) Please refer to separate FCC RF Test Report CETECOM_18-1-0221601T03a

RF-Exposure Evaluation (separation distance user to RF-radiating element greater 20cm)							
Test cases	**Port**	**References & Limits**			**EUT set-up**	**EUT Op mode**	**Result**
		FCC Standard	**RSS Section**	**Test Limit**			
Radio frequency radiation exposure requirements	Cabinet + Inter-connecting cables (radiated)	§1.1310(b) §2.1091 §2.1093	RSS-102 Issue 5	**SAR-Limits FCC:** 1.1310(b)	1	1	See separate test reports CETECOM_TR 18-1-0048201T05a
				RF-Field Strength Limits: FCC: "general population/ uncontrolled" environment Table 1 **ISED:** Table 4	1	1	

1.2. Attestation:

I declare that all measurements were performed by me or under my supervision and that all measurements have been performed and are correct to my best knowledge and belief to Innovation , Science and Economic Development (ISED) Canada standards. All requirements as shown in above table are met in accordance with enumerated standards.

The current version of the Test Report CETECOM_TR18-1-0048201T01a-C1 replaces the Test Report CETECOM_TR18-1-0048201T01a dated 2017-12-05. The replaced test report is herewith invalid.

Ninovic Perez 2018.12.12 10:43:03 +01'00'

....

Dipl.-Ing. Niels Jeß
Responsible for test section

Dipl.-Ing N. Perez
Responsible for test report

2. Administrative Data

2.1. Identification of the testing laboratory

Company name:	CETECOM GmbH
Address:	Im Teelbruch 116 45219 Essen - Kettwig Germany
Responsible for testing laboratory:	Dipl.-Ing. Niels Jeß

2.2. Test location

2.2.1. Test laboratory "CTC"

Company name:	see chapter 2.1. Identification of the testing laboratory

2.3. Organizational items

Responsible for test report and Project leader:	Dipl.-Ing N. Perez Dipl.-Ing N. Perez
Receipt of EUT:	2018-08-20
Date(s) of test:	2018-08-22 - 2018-12-03
Date of report:	2018-12-12
Version of template: 13.02	

2.4. Applicant's details

Applicant's name:	Robert Bosch Car Multimedia GmbH
Address:	Robert-Bosch-Straße 200 31139 Hildesheim Germany
Contact :	Mr. Salvatore Miraglia

2.5. Manufacturer's details

Manufacturer's name:	see applicant's details
Address:	see applicant's details

3. Equipment under test (EUT)

3.1. Certification Data of Main EUT declared by Applicant

Model Nr.	AIVISBX0
Type	Navigationsystem with WLAN and Bluetooth
FCC ID	AIVISBX0
IC/ ISED	YBN-AIVISBX0
Frequency range (US/Canada -bands)	☒ 5150 MHz (Channel 36) to 5250 MHz (Channel 48) for 20MHz BW ☒ 5250 MHz (Channel 52) to 5350 MHZ (Channel 64) for 40MHz BW ☒ 5470 MHz (Channel 100) to 5725 MHZ (Channel 140) for 40MHz BW ☒ 5725 MHz (Channel 149) to 5850 MHZ (Channel 165) for 40MHz BW
Type of modulation	See chapter 3.2
Antenna Type	☒ Integrated ☐ External, no RF- connector ☐ External, separate RF-connector
Antenna Model	PCB Antenna
Antenna Gain	5.1 dBi

Max. Conducted Output Power	RMS [dBm]
U-NII-1	802.11a: 8.18 802.11n20: 8.38 802.11ac20: 3.93 802.11n40: 8.20 802.11ac40: 4.00 802.11ac80: 3.70
U-NII-2A	802.11a: 8.08 802.11n20: 8.18 802.11ac20: 3.87 802.11n40: 7.90 802.11ac40: 3.80 802.11ac80: 3.60
U-NII-2C	802.11a: 8.13 802.11n20: 6.98 802.11ac20: 2.66 802.11n40: 6.80 802.11ac40: 2.80 802.11ac80: 2.90
U-NII-3	802.11a: 8.11 802.11n20: 6.55 802.11ac20: 2.66 802.11n40: 7.10 802.11ac40: 3.20 802.11ac80: 2.70
EIRP Power (calculated)	EIRP Power [dBm]
U-NII-1	802.11a: 13.28 802.11n20: 13.48 802.11ac20: 9.03 802.11n40: 13:30 802.11ac40: 9.1 802.11ac80: 8.8
U-NII-2A	802.11a: 13.18 802.11n20: 13.28 802.11ac20: 8.97 802.11n40: 13:00 802.11ac40: 8.9 802.11ac80: 8.7
U-NII-2C	802.11a: 13.23 802.11n20: 12.08 802.11ac20: 7.76 802.11n40: 11.90 802.11ac40: 7.9 802.11ac80 8.0
U-NII-3	802.11a: 13.21 802.11n20: 11.65 802.11ac20: 7.76 802.11n40: 12.20 802.11ac40: 8.3 802.11ac80: 7.8

Installed options	☒ 802.11 a/n/ac ☒ 802.11 b/g/n (not tested within this report) ☒ Bluetooth LE (not tested within this report) ☒ Bluetooth EDR (not tested within this report)		
Power supply	☐ Internal battery Li-Io, range 3.5V to 4.1V ☐ over AC/DC adapter: 110V/60 Hz ☒ Nominal Test Voltage : 13.5 V DC with external power supply		
Special EMI components	--		
EUT sample type	☐ Production	☒ Pre-Production	☐ Engineering
FCC label attached	☐ yes	☒ no	

Remark:

3.2. WLAN 5 GHz 802.11a/n Technical Data Of Main EUT as Declared by Applicant

Firmware Version	--		
Frequency | Channel | B.W. (USA bands only)**	U-NII 1: 5150-5250 MHz	☒ Ch 36 | 40 | 44| 48	☒ Bandwidth 20 MHz
		☒ Ch. 38 | 46	☒ Bandwidth 40 MHz
		☒ Ch. 42	☒ Bandwidth 80 MHz
	U-NII2A: 5250-5350 MHz	☒ Ch 52 | 56 | 60| 64	☒ Bandwidth 20 MHz
		☒ Ch. 54 | 62	☒ Bandwidth 40 MHz
		☒ Ch. 58	☒ Bandwidth 80 MHz
	U-NII 2C: 5470-5725 MHz	☒ Ch 100 | 104 | 108	☒ Bandwidth 20 MHz
		☒ Ch 112 | 116 | 120	
		☒ Ch 124 | 128 | 132	
		☒ Ch 136 | 140	
		☒ Ch. 102 | 110 | 118	☒ Bandwidth 40 MHz
		☒ Ch 126 | 134	
		☒ Ch 106 | 122	☒ Bandwidth 80 MHz
	U-NII 3: 5725 -5850 MHz	☒ Ch 149 | 153 | 157	☒ Bandwidth 20 MHz
		☒ Ch 161 | 165	
		☒ Ch 151 | 159	☒ Bandwidth 40 MHz
		☒ Ch 155	☒ Bandwidth 80 MHz
802.11a – Mode OFDM Modulation | Data Rates	☒ BPSK | 6 Mbps / 9 Mbps ☒ QPSK | 12 Mbps / 18 Mbps ☒ 16-QAM | 24 Mbps / 36 Mbps ☒ 64-QAM | 48 Mbps / 54 Mbps		
802.11n – Mode OFDM Modulation | Data Rates	☒ HT20 (MCS0 – MCS7) | 7.2/14.4/21.7/28.9/43.3/57.8/65/72.2 Mbps ☒ HT40 (MCS0 – MCS7) | 15/30/45/60/90/120/135/150 Mbps		
802.11ac – Mode OFDM Modulation | Data Rates	☒ HT20 (MCS0 – MCS9) | 7.2/14.4/21.7/28.9/43.3/57.8/65/72.2 Mbps ☒ HT40 (MCS0 – MCS9) | 15/30/45/60/90/120/135/150 Mbps ☒ HT80 (MCS0 – MCS9) | 7.2/14.4/21.7/28.9/43.3/57.8/65/72.2 Mbps		
Power Supply	☒ Nominal Test Voltage : 13.5V DC with external power supply		
Special EMI Components	--		
EUT sample type	☐ Production	☒ Pre-Production	☐ Engineering
FCC label attached	☐ yes	☒ no	

3.3. EUT: Type, S/N etc. and short descriptions used in this test report

Short descrip-tion*)	EUT	Type	S/N serial number	HW hardware status	SW software status	PMT Reference
EUT A	AIVISBX0	Navigationsystem with WLAN and Bluetooth	0005000	C-Sample	1003	S06
EUT B	AIVISBX0	Navigationsystem with WLAN and Bluetooth	0005044	C-Sample	1003	S05

*) EUT short description is used to simplify the identification of the EUT in this test report.

3.4. Auxiliary Equipment (AE): Type, S/N etc. and short descriptions

AE short descrip-tion *)	Auxiliary Equipment	Type	S/N serial number	HW hardware status	SW software status
AE 1	USB-cable (Dongle)	0,38m	S7291GC000379	Version-D1	--
AE 2	Power Supply Cable	--	--	--	--
AE 3	Notebook	Lenovo X200S	LVZT1DG	--	--

*) AE short description is used to simplify the identification of the auxiliary equipment in this test report.

3.5. EUT set-ups

EUT set-up no.*)	Combination of EUT and AE	Description
set. 1	EUT A + AE 1 + AE 2	Radiated measurement set-up
set. 2	EUT B + AE 1 + AE 2	Conducted measurement set-up

*) EUT set-up no. is used to simplify the identification of the EUT set-up in this test report.

3.6. EUT operating modes

EUT operating mode no.*1)	Description of operating modes	Additional information
op. 1	TX-Mode Burst 20MHz	With help of special test firmware WLAN is switched to a bandwidth of 20MHz and a continuous traffic mode in burst mode (duty cycle >98%) was set-up *2)
op. 2	TX-Mode Burst 40MHz	With help of special test firmware WLAN is switched to a bandwidth of 40MHz and a continuous traffic mode in burst mode (duty cycle >98%) was set-up *2)
op. 3	TX-Mode Burst 80MHz	With help of special test firmware WLAN is switched to a bandwidth of 80MHz and a continuous traffic mode in burst mode (duty cycle >98%) was set-up *2)
op. 4	Normal mode	

*1) EUT operating mode no. is used to simplify the test report.
*2) Please refer to document “Instructions_RadioTypeApproval_9_6_2017” dated 2017-06-09 for additional information regarding operating mode setup and output power levels.

3.6.1. Test tool information
Labtool version: 2.0.0.75
Labtool date: Mar 18 2015 (15:56:06)

The following settings have been done under SW Labtool:

Make the main settings which only have to be set once (per session):
30 0 (Choose the 2,4G band) or 30 1 (Choose the 5G band)
112 0 (20 MHz Bandwidth) or 112 1 (40 MHz Bandwidth) or 112 4 (80 MHz Bandwidth)

```
Q:\MB\cTP\06_Models_Test_Results\B-Sample\SB032__cTP__My\03_Inbetriebnahme\labtool_for_wi...

Enter option: 1
Name:           DutApiClass
Interface:      EtherNet
Version:        2.0.0.75
Date:           Mar 18 2015 (15:56:06)

Note:

Q:\MB\cTP\06_Models_Test_Results\B-Sample\SB032__cTP__My\03_Inbetriebnahme\labto
ol_for_win_22075_p22\setup.ini
Dut's IP 192.168.1.40:9930
Host's IP 192.168.1.1:9931
DutIf_UdpIp::delay 0
DutIf_UdpIp::vg_IfSpy 0
TCP connecting...
 DutIf_InitConnection: 0
-------------------------------------------------------
                W87xx (802.11a/g/b/n/ac) TEST MENU
-------------------------------------------------------
Enter option: 30 0
 DutIf_SetModeAG: 0x0
Enter option: 112 0
DutIf_SetChannelBw: 0x00000000
Enter option: _
```

Now the parameters for Channel, Power level and modulation group has to be done:
22 1 14 0

```
Enter option: 22 1 17 0
 DutIf_SetRfChannel: 0x0
 DutIf_SetRfPowerCal: 0x0
Enter option:
```

For 802.11b the Power level is always 14 and the modulation group is 0
For 802.11g the Power level is always 11 and the modulation group is 1
For 802.11n (2,4GHz) the Power level is always 11 and the modulation group is 1
For 802.11n (5GHz) the Power level is always 10 and the modulation group is 1
For 802.11a the Power level is always 10 and the modulation group is 1
For 802.11ac the Power level is always 6 and the modulation group is 1

If a continuous burst is required use instead of the command 25 the command 17:

17 1 4

```
Enter option: 17 1 4
 DutIf_SetTxDataRate: 0x00000000
        TRPC ID: 2
 DutIf_SetTxContMode: 0x00000000
Enter option:
```

11b		11g/a		11n		11ac	
ID	DataRate	ID	DataRate	ID	DataRate	ID	DataRate
1	1M	6	6M	15	MCS0	101	VHT_SS1_MCS0
2	2M	7	9M	16	MCS1	102	VHT_SS1_MCS1
3	5.5M	8	12M	17	MCS2	103	VHT_SS1_MCS2
4	11M	9	18M	18	MCS3	104	VHT_SS1_MCS3
		10	24M	19	MCS4	105	VHT_SS1_MCS4
		11	36M	20	MCS5	106	VHT_SS1_MCS5
		12	48M	21	MCS6	107	VHT_SS1_MCS6
		13	54M	22	MCS7	108	VHT_SS1_MCS7
						109	VHT_SS1_MCS8
						110	VHT_SS1_MCS9

In order to stop the TX:

17 0

```
Enter option: 17 0
 DutIf_SetTxContMode: 0x00000000
Enter option:
```

3.7. Worst case identification

The following WLAN modes were used for testing

WLAN Mode	Data Rate
802.11a	6Mbps
802.11n, 20MHz bandwidth	MCS3
802.11ac, 20MHz bandwidth	MCS4
802.11n, 40MHz bandwidth	MCS4
802.11ac, 40MHz bandwidth	MCS0
802.11ac, 80MHz bandwidth	MCS0

4. Description of test system set-up's

4.1. Test system set-up for conducted measurements on antenna port

Conducted Set-up W1

Conducted RF-Setup 1 (W1 Set-up)

General description:

The EUT's RF-signal is coupled out by a suitable antenna coupling connector (1). The signal is first attenuated (2) then connected to the power meter (3) for conducted power measurements. The specific attenuation loss is determined prior to the measurement within a set-up attenuation measurement. These are then taken into account by correcting the measurement readings.

Schematic:

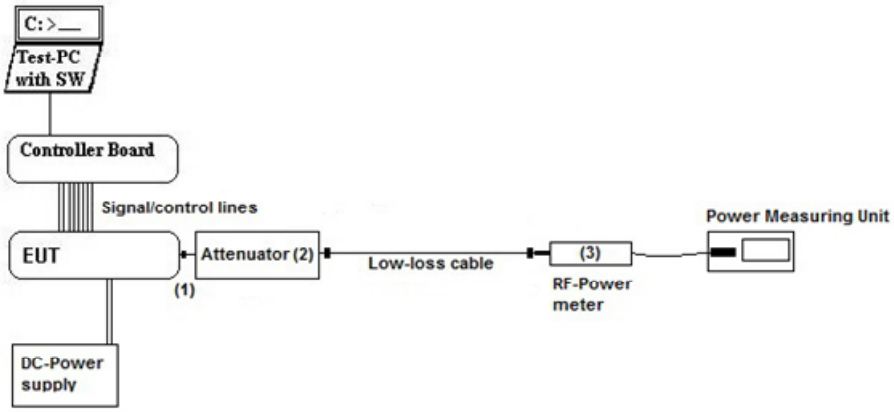

Testing method:

ANSI C63.10:2013,
KDB 789033 D02 General UNII Test Procedures New Rules v01r04

Used Equipment

Passive Elements	Test Equipment	Remark:
☒ 20 dB Attenuator ☒ Low loss RF-cables ☒	☒ Power Meter ☒ DC-Power Supply ☒ Spectrum-Analyser	See List of equipment under each test case and chapter 8 for calibration info

Measurement uncertainty

See chapter 5.7

Conducted Set-up W2

Conducted RF-Setup 2 (W2 Set-up)	
General description:	The EUT's RF-signal is coupled out by a suitable antenna coupling connector (1). The signal is first attenuated (2) then connected to spectrum-analyzer (4) for RF-conducted measurements. The specific attenuation loss is determined prior to the measurement within a set-up attenuation measurement. These are then taken into account by correcting the measurement readings of the spectrum-analyzer.
Schematic:	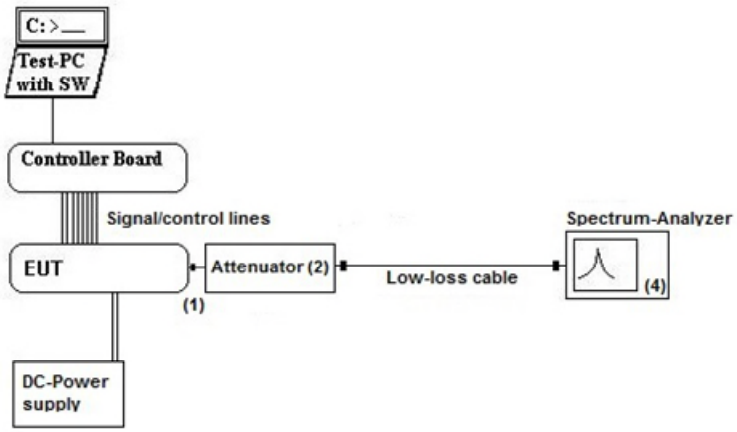

Testing method:	ANSI C63.10:2013, KDB 789033 D02 General UNII Test Procedures New Rules v01r04		
Used Equipment	Passive Elements	Test Equipment	Remark:
	☒ 20 dB Attenuator ☒ Low loss RF-cables	☒ Power Meter ☒ DC-Power Supply ☒ Spectrum-Analyser	See List of equipment under each test case and chapter 8 for calibration info
Measurement uncertainty	See chapter 5.7		

4.2. Test system set-up for radiated magnetic field measurements below 30 MHz

Specification: ANSI C63.4-2014 §5.3, §8.2.1, §8.3.1.1+§8.3.2.1 , ANSI C63.10-2013 chapter 6.4 (§6.4.4.2)

General Description: Evaluating the radiated field emissions are done first by an exploratory emission measurement and a final measurement for most critical frequencies determined.

The loop antenna was placed at 1 m height above ground plane and 3 m measurement distance from set-up for investigations. Because of reduced measurement distance, correction data were applied, as stated in chapter "General Limit - Radiated field strength emissions below 30 MHz". The tests are performed in the semi anechoic room recognized by the regulatory commission.

Schematic:

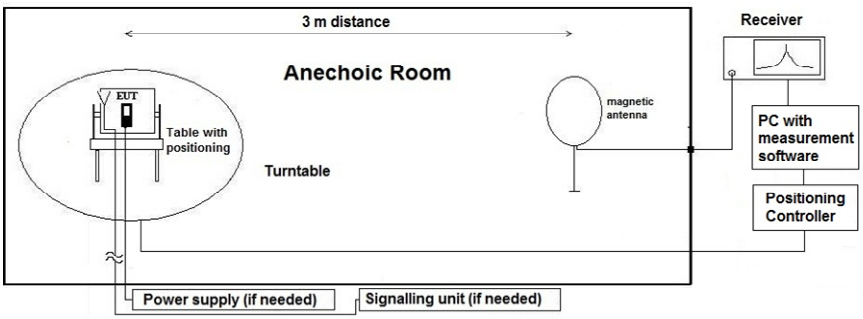

Testing method:

Exploratory, preliminary measurement
The EUT and it's associated accessories are placed on a non-conductive position manipulator (tipping device) of 0.8 m height which is placed on the turntable. By rotating the turntable (step 90°, range 0°to 360°) and the EUT itself either on 3-orthogonal axis (portable equipment) or 2-orthogonal axis (defined operational position of EUT), the emission spectrum was recorded. The loop antenna was moved at least to 2-perpendicular axes (antenna vector in direction of EUT and parallel to EUT) in order to maximize the emissions. The results are documented in a diagram. Critical frequencies (low margin to limit) are saved within a data reduction table for further investigations. If various operating modes are supported, further investigations are made to find the worst-case. Also the interconnection cables and equipment position were varied in order to maximize the emissions.

Final measurement on critical frequencies
Based on the exploratory measurements, the most critical frequencies are re-measured by maintaining the EUT's worst-case operation mode, cable position, etc.

First a frequency zoom around the critical frequency is done to locate the frequency more precisely. After this step, for all identified critical frequencies, the maximum peak was determined.

Following parameters were varied: the turntable angle continuously in the range 0 to 360 degree, the EUT itself either over 3-orthogonal axis (not defined usage position) or 2-orthogonal axis (defined usage position).

On the determined worst-case position, a final measurement with necessary bandwidth and detector according standard has been carried out.

Formula:

$E_C = E_R + AF + C_L + D_F - G_A$

$M = L_T - E_C$

AF =Antenna factor
C_L = Cable loss
D_F= Distance correction factor
E_C = Electrical field – corrected value
E_R = Receiver reading
G_A= Gain of pre-amplifier (if used)
L_T = Limit
M = Margin

All units are dB-units, positive margin means value is below limit.

Distance correction: Reference for applied correction (extrapolating) factors due to reduced measurement distance:
ANSI C63.10:2013, §6.4.4.2 - Equations (2) + (3) + (4)

4.3. Test system set-up for radiated electric field measurement 30 MHz to 1 GHz

Specification: ANSI C63.4-2014 chapter 8.2.3, ANSI C63.10-2013 chapter 6.5

General Description: Evaluating the field emissions have to be done first by an exploratory emissions measurement and a final measurement for most critical frequencies. The tests are performed in a NSA-compliant semi anechoic room (SAR) recognized by the regulatory commissions.

Schematic:

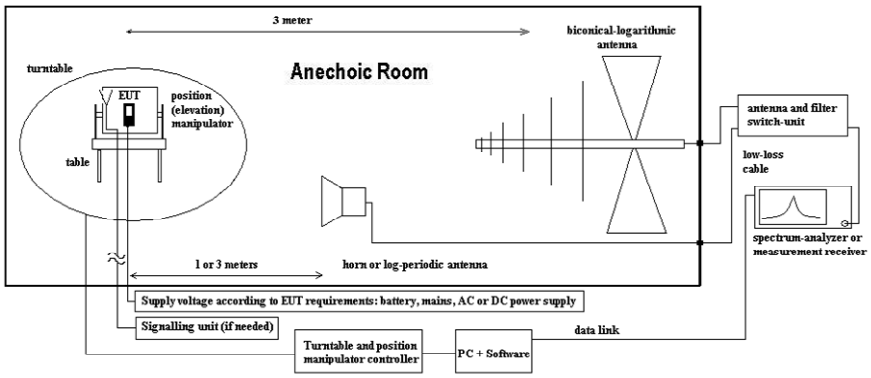

Testing method:

Exploratory, preliminary measurements
The EUT and its associated accessories are placed on a non-conductive position manipulator (tipping device) of 0.8 m height which is placed on the turntable. By rotating the turntable (range 0° to 360°, step 90°) and the EUT itself either on 3-orthogonal axis (portable equipment) or 2-orthogonal axis (defined operational position of EUT) the emission spectrum and it's characteristics was recorded with an EMI-receiver, broadband antenna and software.

Measurement antenna: horizontal and vertical, heights: 1,0 m and 1,82 m as worst-case determined by an exploratory emission measurements. The results are documented in a diagram. Critical frequencies (low margin to limit) are saved within a table for further investigations. If various operating modes are supported, further investigations are made to find the worst-case of them. Also the interconnection cables and equipment position were varied in order to maximize the emissions.

Final measurement on critical frequencies
Based on the exploratory measurements, the most critical frequencies are re-measured by maintaining the EUT's worst-case operation mode, cable position, etc. either on 10m OATS or 3m semi-anechoic room.

First a frequency zoom around the critical frequency is done to locate the frequency more precisely. After this step, for all identified critical frequencies, the maximum peak was determined.

Following parameters were varied: the turntable angle continuously in the range 0 to 360 degree, the EUT itself either over 3-orthogonal axis (not defined usage position) or 2-orthogonal axis (defined usage position). The measurement antenna height between 1 m and 4 m.

On the determined worst-case position, a final measurement with necessary bandwidth and detector according standard has been carried out.

Formula:

$E_C = E_R + AF + C_L + D_F - G_A$ (1)

$M = L_T - E_C$ (2)

AF = Antenna factor
C_L = Cable loss
D_F = Distance correction factor (if used)
E_C = Electrical field – corrected value
E_R = Receiver reading
G_A = Gain of pre-amplifier (if used)
L_T = Limit
M = Margin

All units are dB-units, positive margin means value is below limit.

4.4. Test system set-up for radiated electric field measurement above 1 GHz

Specification: ANSI C63.4-2014 chapter 8.3, ANSI C63.10-2013 chapter 6.6.3.3 & 6.6.4

General Description: Evaluating the emissions have to be done first by an exploratory emissions measurement and a final measurement for most critical frequencies. The tests are performed in a CISPR 18-1-4:2010 compliant fully anechoic room (FAR) recognized by the regulatory commission. The measurement distance was set to 3 meter for frequencies up to 18 GHz and 2 meter above 18 GHz. A logarithmic periodic antenna is used for the frequency range 30 MHz to 1 GHz. Horn antennas are used for frequency range 1 GHz to 40 GHz. The EUT is aligned within 3 dB beam width of the measurement antenna with three orthogonal axis measurements on the EUT.

Schematic:

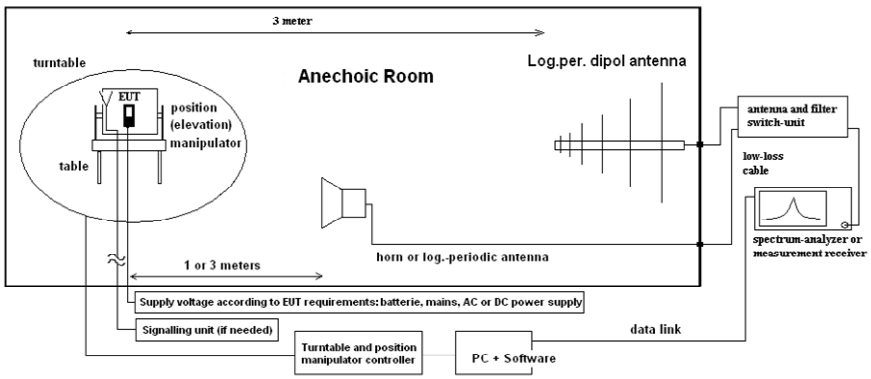

Testing method:

Exploratory, preliminary measurements
The EUT and its associated accessories are placed on a non-conductive position manipulator (tipping device) of 1.55 m height which is placed on the turntable. By rotating the turntable (range 0° to 360°, step 15°) and the EUT itself either on 3-orthogonal axis (portable equipment) or 2-orthogonal axis (defined operational position of EUT) the emission spectrum and it's characteristics was recorded with an EMI-receiver, broadband antenna and software.
The measurements are performed in horizontal and vertical polarization of the measurement antennas. The results are documented in a diagram. Critical frequencies (low margin to limit) are saved within a table for further investigations. If various operating modes are supported, further investigations are made to find the worst-case of them. Also the interconnection cables and equipment position were varied in order to maximize the emissions.

Final measurement on critical frequencies
Based on the exploratory measurements, the most critical frequencies are re-measured by maintaining the EUT's worst-case operation mode, cable position, etc.

First a frequency zoom around the critical frequency is done to locate the frequency more precisely. After this step, for all identified critical frequencies, the maximum peak was determined. Following parameters were varied: the turntable angle continuously in the range 0 to 360 degree, the EUT itself over 3-orthogonal axis and the height for EUT with large dimensions.

On the determined worst-case position, a final measurement with necessary bandwidth and detector according standard has been carried out.
On the determined worst-case position, a final measurement with necessary bandwidth and detector according standard has been carried out.

Formula:

$E_C = E_R + AF + C_L + D_F - G_A$ (1)

$M = L_T - E_C$ (2)

E_C = Electrical field – corrected value
E_R = Receiver reading
M = Margin
L_T = Limit
AF = Antenna factor
C_L = Cable loss
D_F = Distance correction factor (if used)
G_A = Gain of pre-amplifier (if used)

All units are dB-units, positive margin means value is below limit.

5. Measurements

5.1. Duty-Cycle

5.1.1. Test location and equipment (for reference numbers please see chapter 'List of test equipment')

Ambient Climatic conditions		Temperature: (22±2)°C		Rel. humidity: (45±15)%		
test site	☐ 441 EMI SAR	☐ 348 EMI cond.	☐ 443 EMI FAR	☐ 347 Radio.lab.	☐ 337 OATS	☒ TS 8997
equipment	☐ 331 HC 4055	☐	☐	☐	☐	☐
spectr. analys.	☒ 683 FSU26	☐ 120 FSEM	☐ 264 FSEK	☐	☐	☐
power meter	☐ 262 NRV-S	☐ 266 NRV-Z31	☐ 265 NRV-Z33	☐ 261 NRV-Z55	☐ 356 NRV-Z1	☐
multimeter	☐ 341 Fluke 112	☐	☐	☐	☐	☐
DC power	☐ 086 LNG50-10	☐ 087 EA3013	☐ 354 NGPE 40	☐ 349 car battery	☐ 350 Car battery	☒ 463 HP3245A
line voltage	☒ 13.5 V DC		☐060 120 V 60 Hz via PAS 5000			
otherwise	☐ 530 Attenuator 10dB	☒ K4 Cable				

The necessary duty-cycle correction factor is determined on nominal conditions on one channel in each operable frequency-band. It is assumed that no noticeable changes occur when tested on other channels or climatic conditions. The Duty-Cycle was constant, means without variations.

5.1.2. Results

☐ The results were corrected in order to evaluate for worst-case result each time when average values are necessary for example average radiated emissions or similar

☒ No correction necessary: Duty-Cycle > 98%

5.2. General Limit – Maximum power output conducted and maximum EIRP power

5.2.1. Test location and equipment (for reference numbers please see chapter 'List of test equipment')

test location	☒ CETECOM Essen (Chapter. 2.2.1)		☐ 443 System CTC-FAR-EMI-		☐ Please see Chapter. 2.2.3	
test site	☐ 441 EMI SAR	☐ 487 SAR NSA	☐ 347 Radio.lab.	☒ TS 8997	☐	☐
receiver	☐ 377 ESCS30	☐ 001 ESS	☐ 489 ESU 40	☐	☐	☐
spectr. analys.	☐ 584 FSU	☐ 120 FSEM	☐ 264 FSEK	☐ 489 ESU 40	☐	☐
antenna	☐ 574 BTA-L	☐ 133 EMCO3115	☐ 302 BBHA9170	☐ 289 CBL 6141	☐ 030 HFH-Z2	☐ 477 GPS
signaling	☐ 392 MT8820A	☐ 436 CMU	☐ 547 CMU			
otherwise	☐ 266 NRV-Z31	☐ 600 NRVD	☐ 110 USB LWL	☐ 482 Filter Matrix	☐ 378 RadiSense	☐ 693 TS8997
DC power	☒ 671 EA-3013S	☐ 463 HP3245A	☐ 459 EA 2032-50	☐ 268 EA- 3050	☐ 494 AG6632A	☐ 498 NGPE 40
otherwise	☐ 331 HC 4055	☐ 248 6 dB Attenuator	☐ 529 Power divider	☒ - cable OTA20		
	☒ 530 10dB Attenuator		☐ K 4 Cable kit			
Supply voltage	☒ 13.5V DC		☐ 060 110 V 60 Hz via PAS 5000			

5.2.2. Reference

FCC	☒ Part 15 Subpart C, §15.407(a)(1)(2)(3)(4)
ISED	☒ RSS-247, Issue 2
ANSI	☒ C63.10-2013
KDB Guidance no.	☒ 789033 D02 General UNII test procedures v01r03: Subchapter E, Method PM (3)(a) ☒ 662911 D01 V02r01 (MIMO, Smart-antenna)
Limits (For the band 5600–5650 MHz, no operation in Canada is permitted)	☒ U-NII 1: 5.15-5.25 GHz: **FCC Outdoor access point:** 1W + antenna gain max. 6dBi + Elevation > 30° 21 dBm EIRP **FCC Indoor Access Point:** 1W + antenna gain max. 6dBi **FCC Mobile & Portable client:** 250mW + antenna gain max. 6dBi **ISED:** ☐ E.I.R.P. max. 200mW or $10+10\log_{10}(B)$ whichever power is less ☒ OEM device installed on vehicles: 30mW EIRP or $1.76 + 10\log_{10}(B)$ + TPC capability
	☒ U-NII2: 5.25-5.35 GHz: **FCC:** lesser of 250mW or $11dBm+10\log_{10}(B)$ **ISED:** ☐ max. conducted output power: 250mW or $11dBm+10\log_{10}(B)$ + Antenna gain < 6dBi ☐ EIRP Elevation Mask requierements if max. EIRP>200mW ☐ Max. EIRP 1Watt or $17+10\log_{10}(B)$ whichever power less ☒ OEM device installed on vehicles: 30mW EIRP or $1.76 + 10\log_{10}(B)$ + TPC capability
	☒ U-NII2extension: 5.470-5.725 GHz: **FCC:** lesser of 250mW or $11dBm+10\log_{10}(B)$ + Antenna gain < 6dBi **ISED:** ☒ Lesser of: lesser of 250mW or $11dBm+10\log_{10}(B)$ ☒ Max. EIRP 1Watt or $17+10\log_{10}(B)$ whichever power less ☐ TPC required if MAX. EIRP > 500mW
	☒ U-NII3: 5.725-5.850 GHz: **FCC/ISED:** ☒ max. conducted power: 1 Watt (30dBm) ☒ Antenna gain less 6dBi ☐ Antenna gain more 6dBi (-> reduction necessary)

5.2.3. EUT settings:

The EUT was instructed to send with maximum power (if adjustable) according applicants instructions.
Different modulation characteristics have been checked, e.g. data rates which EUT can operate.
Three operating frequencies within each operating band have been selected.

5.2.4. Test condition and measurement test set-up

Signal ink to test system (if used):	☐ air link	☐ cable connection	☒ none
EUT-grounding	☒ none	☐ with power supply	☐ additional connection
Equipment set up	☒ table top 1.5m height		☐ floor standing
Climatic conditions	Temperature: (22±3°C)		Rel. humidity: (40±20)%
General measurement procedures	Please see chapter “Test system set-up for conducted RF-measurement at antenna Port” (W1 Set-up)		

5.2.5. Results

APLICANT'S DECLARED ANTENNA CHARACTERISTICS:

☒ Directional Gain < 6 dBi (measured: difference between measured conducted and radiated eirp. power)
☐ Directional Gain > 6 dBi (measured / applicant's declaration) -> conducted power reduction necessary

The PCB Antenna has the following gain:
5.06 dBi

Different modulation types and data rates were tested in order to find the maximum peak conducted output power. **Enclosed are only the maximum values for each modulation format**, pls. compare separate document A1 for all results.

The EUT complies to the band edge requirement under provision that the power level is adjusted.
The 5GHz WLAN a mode power level for type approval is set to 10dBm.
The 5GHz WLAN n mode power level for type approval is set to 10dBm.
The 5GHz WLAN ac mode power level for type approval is set to 6dBm.

5.2.5.1. FCC REQUIREMENT

a 20	6Mbps	9Mbps	12Mbps	18Mbps	24Mbps	36Mbps	48Mbps	54Mbps	Max	Limit	Result
Channel 36 (5180MHz)	7,92	8,05	7,6	6,66	8,16	7,64	6,68	7,89	8,16	24	Pass
Channel 40 (5200MHz)	8,18	7,48	6,81	7,03	7,47	6,72	7,09	8,16	8,18	24	Pass
Channel 48 (5240MHz)	7,48	7,64	6,82	6,43	7,78	6,38	6,56	7,84	7,84	24	Pass
Channel 52 5260MHz	8,05	7,69	6,69	8,08	7,65	6,76	8,07	7,99	8,08	24	Pass
Channel 56 (5280MHz)	7,73	6,76	7,02	7,48	6,76	7,03	7,71	7,54	7,73	24	Pass
Channel 64 (5320MHz)	7,98	6,79	6,42	7,83	6,42	6,59	7,59	8,08	8,08	24	Pass
Channel 100 (5500MHz)	6,98	6,62	8,08	7,69	6,71	8,13	7,64	6,99	8,13	24	Pass
Channel 116 (5580MHz)	6,98	6,96	7,56	6,79	7,11	7,5	6,71	6,66	7,56	24	Pass
Channel 144 (5720MHz)	6,36	6,46	7,71	6,47	6,5	7,71	6,43	6,29	7,71	24	Pass
Channel 149 (5745MHz)	6,08	8,09	7,83	6,67	8,11	7,91	6,72	6,32	8,11	30	Pass
Channel 157 (5785MHz)	5,98	7,53	6,78	6,96	7,55	6,74	7	5,96	7,55	30	Pass
Channel 165 (5825MHz)	5,95	7,75	6,43	6,56	7,69	6,41	6,49	5,86	7,75	30	Pass

Remark: See diagrams in separate Annex 1

5.2.5.2. ISED REQUIRMENT ONLY

RSS 247 section 6.2.1.1 and section 6.2.2.1
Frequency band 5150-5250MHz and 5250-5350MHz

For OEM devices installed in vehicles, the maximum e.i.r.p. shall not exceed 30 mW or 1.76 + 10 log10B, dBm, whichever is less. Devices shall implement transmitter power control (TPC) in order to have the capability to operate at least 3 dB below the maximum permitted e.i.r.p. of 30 mW.

The maximum EIRP calculated is 13.24dBm < 30mW

Verdict: Pass

RSS 247 section 6.2.3
Frequency band 5600-5650MHz

Until further notice, devices subject to this section shall not be capable of transmitting in the band 5600-5650 MHz. This restriction is for the protection of Environment Canada's weather radars operating in this band.

5.2.5.3. MAXIMUM EIRP POWER

	a 20	6Mbps	9Mbps	12Mbps	18Mbps	24Mbps	36Mbps	48Mbps	54Mbps	Max	Ant Gain	EIRP
	Channel 36 (5180MHz)	7,92	8,05	7,6	6,66	8,16	7,64	6,68	7,89	8,16	5,1	13,26
	Channel 40 (5200MHz)	8,18	7,48	6,81	7,03	7,47	6,72	7,09	8,16	8,18	5,1	13,28
U-NII-1	Channel 48 (5240MHz)	7,48	7,64	6,82	6,43	7,78	6,38	6,56	7,84	7,84	5,1	12,94
	Channel 52 5260MHz	8,05	7,69	6,69	8,08	7,65	6,76	8,07	7,99	8,08	5,1	13,18
	Channel 56 (5280MHz)	7,73	6,76	7,02	7,48	6,76	7,03	7,71	7,54	7,73	5,1	12,83
U-NII-2A	Channel 64 (5320MHz)	7,98	6,79	6,42	7,83	6,42	6,59	7,59	8,08	8,08	5,1	13,18
	Channel 100 (5500MHz)	6,98	6,62	8,08	7,69	6,71	8,13	7,64	6,99	8,13	5,1	13,23
	Channel 116 (5580MHz)	6,98	6,96	7,56	6,79	7,11	7,5	6,71	6,66	7,56	5,1	12,66
U-NII-2C	Channel 144 (5720MHz)	6,36	6,46	7,71	6,47	6,5	7,71	6,43	6,29	7,71	5,1	12,81
	Channel 149 (5745MHz)	6,08	8,09	7,83	6,67	8,11	7,91	6,72	6,32	8,11	5,1	13,21
	Channel 157 (5785MHz)	5,98	7,53	6,78	6,96	7,55	6,74	7	5,96	7,55	5,1	12,65
U-NII-3	Channel 165 (5825MHz)	5,95	7,75	6,43	6,56	7,69	6,41	6,49	5,86	7,75	5,1	12,85

	n 20	MCS0	MCS1	MCS2	MCS3	MCS4	MCS5	MCS6	MCS7	Max	Ant Gain	EIRP
	Channel 36 (5180MHz)	7,92	7,95	8,03	8,1	8,17	8,19	8,21	8,27	8,27	5,1	13,37
	Channel 40 (5200MHz)	8,18	8,24	8,29	8,38	8	8,37	8,15	8,11	8,38	5,1	13,48
U-NII-1	Channel 48 (5240MHz)	7,48	7,47	7,52	7,32	7,6	7,65	7,72	7,69	7,72	5,1	12,82
	Channel 52 5260MHz	8,05	7,79	7,64	7,62	7,64	7,7	7,68	7,68	8,05	5,1	13,15
	Channel 56 (5280MHz)	7,73	7,53	7,48	7,34	7,71	7,34	7,35	7,43	7,73	5,1	12,83
U-NII-2A	Channel 64 (5320MHz)	7,98	8	8,08	8,1	8,18	8,16	7,97	8,14	8,18	5,1	13,28
	Channel 100 (5500MHz)	6,98	6,97	6,98	6,94	6,72	6,78	6,81	6,77	6,98	5,1	12,08
	Channel 116 (5580MHz)	6,68	6,19	6,26	6,32	6,49	6,54	6,54	6,54	6,68	5,1	11,78
U-NII-2C	Channel 144 (5720MHz)	6,36	5,93	5,94	5,57	6,39	6,38	6,28	6,39	6,39	5,1	11,49
	Channel 149 (5745MHz)	6,07	6,11	6,17	6,01	6,53	6,52	6,55	6,51	6,55	5,1	11,65
	Channel 157 (5785MHz)	5,98	5,99	5,99	5,91	6,1	6,48	6,19	6,47	6,48	5,1	11,58
U-NII-3	Channel 165 (5825MHz)	5,95	5,92	5,73	5,72	5,89	5,97	6,02	5,97	6,02	5,1	11,12

	ac 20	MCS0	MCS1	MCS2	MCS3	MCS4	MCS5	MCS6	MCS7	Max	Ant Gain	EIRP
	Channel 36 (5180MHz)	3,68	3,64	3,74	3,55	3,78	3,78	3,62	3,65	3,78	5,1	8,88
	Channel 40 (5200MHz)	3,76	3,85	3,75	3,8	3,93	3,84	3,54	3,67	3,93	5,1	9,03
U-NII-1	Channel 48 (5240MHz)	3,34	3,48	3,78	3,1	3,39	3,42	3,47	3,54	3,78	5,1	8,88
	Channel 52 5260MHz	3,41	3,48	3,49	3,47	3,57	3,43	3,56	3,45	3,57	5,1	8,67
	Channel 56 (5280MHz)	3,07	3,14	3,27	3,37	3,69	3,42	3,23	3,22	3,69	5,1	8,79
U-NII-2A	Channel 64 (5320MHz)	3,64	3,77	3,85	3,87	2,64	2,64	2,67	2,73	3,87	5,1	8,97
	Channel 100 (5500MHz)	2,58	2,54	2,66	2,64	2,35	2,35	2,43	2,25	2,66	5,1	7,76
	Channel 116 (5580MHz)	2,56	2,48	2,53	2,59	2,27	2,59	2,53	2,57	2,59	5,1	7,69
U-NII-2C	Channel 144 (5720MHz)	2,41	2,43	2,37	2,47	2,6	2,29	2,12	2,45	2,6	5,1	7,7
	Channel 149 (5745MHz)	2,24	2,12	2,48	2,57	2,21	2,48	2,33	2,43	2,57	5,1	7,67
	Channel 157 (5785MHz)	2,27	2,13	2,48	2,38	2,41	2,66	2,54	2,46	2,66	5,1	7,76
U-NII-3	Channel 165 (5825MHz)	1,77	1,72	2,04	2,27	2,18	2,24	2,12	2,21	2,27	5,1	7,37

	n 40	MCS0	MCS1	MCS2	MCS3	MCS4	MCS5	MCS6	MCS7	Max	Ant Gain	EIRP
	Channel 38 (5190MHz)	8	8,1	8,1	8,1	8,2	8,1	8,1	8,1	8,2	5,1	13,3
U-NII-1	Channel 46 (5230MHz)	7,5	7,5	7,6	7,5	7,5	7,5	7,5	7,6	7,6	5,1	12,7
	Channel 54 (5270MHz)	7,6	7,7	7,8	7,8	7,8	7,7	7,7	7,7	7,8	5,1	12,9
U-NII-2A	Channel 62 (5310MHz)	7,7	7,6	7,7	7,7	7,7	7,6	7,9	7,6	7,9	5,1	13
	Channel 102 (5510MHz)	6,8	6,8	6,8	6,8	6,8	6,7	6,7	6,7	6,8	5,1	11,9
	Channel 118 (5590MHz)	6,8	6,8	6,4	6,5	6,4	6,4	6,4	6,4	6,8	5,1	11,9
U-NII-2C	Channel 134 (5670MHz)	6,6	6,7	6,7	6,7	6,7	6,8	6,7	6,7	6,8	5,1	11,9
	Channel 151 (5755MHz)	7	7	7	7	7,1	7	7,1	7	7,1	5,1	12,2
U-NII-3	Channel 159 (5795MHz)	6,5	6,4	6,4	6,6	6,5	6,6	6,5	6,5	6,6	5,1	11,7

	ac 40	MCS0	MCS1	MCS2	MCS3	MCS4	MCS5	MCS6	MCS7	Max	Ant Gain	EIRP
	Channel 38 (5190MHz)	4	3,9	3,9	3,9	3,9	3,9	3,9	3,9	4	5,1	9,1
U-NII-1	Channel 46 (5230MHz)	3,4	3,4	3,4	3,3	3,4	3,4	3,3	3,4	3,4	5,1	8,5
	Channel 54 (5270MHz)	3,5	3,6	3,5	3,5	3,6	3,5	3,5	3,5	3,6	5,1	8,7
U-NII-2A	Channel 62 (5310MHz)	3,8	3,8	3,8	3,8	3,8	3,8	3,7	3,4	3,8	5,1	8,9
	Channel 102 (5510MHz)	2,6	2,6	2,6	2,7	2,6	2,6	2,6	2,6	2,7	5,1	7,8
	Channel 118 (5590MHz)	2,5	2,4	2,4	2,4	2,4	2,4	2,4	2,5	2,5	5,1	7,6
U-NII-2C	Channel 134 (5670MHz)	2,8	2,8	2,7	2,3	2,7	2,7	2,7	2,7	2,8	5,1	7,9
	Channel 151 (5755MHz)	3	3,2	3,1	3	3,1	3,1	3,1	3	3,2	5,1	8,3
U-NII-3	Channel 159 (5795MHz)	2,7	2,2	2,7	2,3	2,6	2,5	2,2	2,2	2,7	5,1	7,8

	ac 80	MCS0	MCS1	MCS2	MCS3	MCS4	MCS5	MCS6	MCS7	Max	Ant Gain	EIRP
U-NII-1	Channel 42 (5210MHz)	3,7	3,6	3,6	3,6	3,6	3,6	3,6	3,6	3,7	5,1	8,8
U-NII-2A	Channel 58 (5290MHz)	3,5	3,5	3,4	3,5	3,6	3,5	3,5	3,5	3,6	5,1	8,7
	Channel 106 (5530MHz)	2,9	2,9	2,9	2,8	2,5	2,8	2,8	2,9	2,9	5,1	8
	Channel 122 5610MHz	2,7	2,8	2,7	2,7	2,7	2,7	2,6	2,8	2,8	5,1	7,9
U-NII-2C	Channel 138 (5690MHz)	2,7	2,6	2,6	2,7	2,3	2,6	2,6	2,5	2,7	5,1	7,8
U-NII-3	Channel 155 (5775MHz)	2,5	2,7	2,7	2,6	2,6	2,6	2,6	2,5	2,7	5,1	7,8

Verdict: Pass

5.3. RF Parameter - 26 dB and 99% occupied Bandwidth

5.3.1. Test location and equipment (for reference numbers please see chapter 'List of test equipment')

test site	☐ 441 EMI SAR	☐ 348 EMI cond.	☐ 443 EMI FAR	☒ 347 Radio.lab.	☐ 337 OATS	☐
spectr. analys.	☐ 584 FSU	☐ 120 FSEM	☐ 264 FSEK	☒ 489 ESU	☐	☐
attenuator	☒ 530 10 dB	☐	☐	☐	☐	☐
signaling	☐ 392 MT8820A	☐ 436 CMU	☐ 547 CMU			
DCpower	☐ 463 Power source	☐ 087 EA3013	☒ 354 NGPE 40	☐ 086 LNG50-10	☐	☐
line voltage	☐ 230 V 50 Hz via public mains		☒ 13.5V DC			

5.3.2. Test condition and measurement test set-up

link to test system (if used):	☐ air link	☒ cable connection	☐
Climatic conditions	Temperature: (22±3°C)		Rel. humidity: (40±20)%

5.3.3. References of occupied and emission bandwidth

FCC	☒ FCC 2.202 for information ☒ Part 15 Subpart C, §15.407(e)
ISED	RSS-Gen, Issue 4, chapter 4.6.1 RSS-247, Issue 2
ANSI	☒ C63.10-2013
KDB Guidance no.	☒ 789033 D02 General UNII test procedures v01r04, Subchapter C
Limits	☒ necessary for maximum power limits depending of B ☒ FCC/ISED: decision if DFS necessary for decision if due 26dBc emissions falling in 5250-5350MHz band ☒ FCC §15.407(e)/ISED: minimum 500kHz for band 5725-5850MHz

5.3.4. EUT Settings:

The EUT was instructed to send with different power/ data rates (if adjustable) according applicants instructions. Different modulation characteristics have been checked, e.g. data rates which EUT can operate.

5.3.5. Measurement method:

The measurement was performed with the RBW set to approximately 1% of the emission bandwidth. The span was set to cover the complete carrier. Three carrier frequencies were used for showing the compliance with this requirement. A DELTA Marker method was set to measure the bandwidth compared to the highest In-Band power. The operating modes have been varied for **26 dB bandwidth** (e.g. data rate, modulation scheme, etc.).

Also the **99% occupied bandwidth** was measured. Two markers are placed on frequency points such that left to lower f-marker and right to higher f-marker only 1% of the TX-power is contained. Between the markers, 99% of the power is laying. The RBW value is readjusted and the measurement repeated until the RBW/EBW ratio is around 1%. The operating modes have been taken the maximum data rates, which had been found out at the output power conducted measurements.

5.3.6.Spectrum-Analyzer Settings: (check if accord. KDB)

Span	Set as to fully display the emissions and at least 26 dB below the PEAK level
Resolution Bandwidth (RBW)	Set to approx 1%
Video Bandwidth (VBW)	3 times the resolution bandwidth
Sweep time	Coupled and low enough to have no gaps within power envelope
Detector	PK (26 dB BW)/Sample (99% OBW)
Sweep mode	Repetitive Mode, MAX-HOLD

5.3.7. Results:

Set-up no.:	1				
Op. Mode:	1 (WLAN 5 GHz | a Mode | B.W. 20 MHz | Power Settings: 10)				
	Channel No.	Nominal bandwidth	26 dB Bandwidth [MHz]	99% Occupied Bandwidth [MHz]	Diagram no.
UN-II-1	36	20	16.60	16.40	Remark 1
UN-II-2A	64		19.80	16.60	Remark 1
UN-II-2C	100		19.60	16.40	Remark 1
UN-NII-3	149		19.60	16.60	Remark 1

Remark 1: See diagrams in separate annex TR18-1-0048201T01a-A1

Set-up no.:	1				
Op. Mode:	1 (WLAN 5 GHz | n Mode | B.W. 20 MHz | Power Settings: 10)				
	Channel No.	Nominal bandwidth	26 dB Bandwidth [MHz]	99% Occupied Bandwidth [MHz]	Diagram no.
UN-II-1	40	20	20.20	17.60	Remark 1
UN-II-2A	52		20.00	17.60	Remark 1
UN-II-2C	116		20.20	17.60	Remark 1
UN-NII-3	157		20.00	17.60	Remark 1

Remark 1: See diagrams in separate annex TR18-1-0048201T01a-A1

Set-up no.:	2				
Op. Mode:	1 (WLAN 5 GHz | ac Mode | B.W. 20 MHz | Power Settings: 6)				
	Channel No.	Nominal bandwidth	26 dB Bandwidth [MHz]	99% Occupied Bandwidth [MHz]	Diagram no.
UN-II-1	48	20	20.20	17.80	Remark 1
UN-II-2A	56		20.20	17.60	Remark 1
UN-II-2C	140		20.00	17.60	Remark 1
UN-NII-3	149		20.20	17.60	Remark 1

Remark 1: See diagrams in separate annex TR18-1-0048201T01a-A1

Set-up no.:	2				
Op. Mode:	1 (WLAN 5 GHz | n Mode | B.W. 40 MHz | Power Settings: 10)				
	Channel No.	Nominal bandwidth	26 dB Bandwidth [MHz]	99% Occupied Bandwidth [MHz]	Diagram no.
UN-II-1	38	40	40.15	36.25	Remark 1
UN-II-2A	54		40.15	35.96	Remark 1
UN-II-2C	102		39.85	36.25	Remark 1
UN-NII-3	151		40.15	36.25	Remark 1

Remark 1: See diagrams in separate annex TR18-1-0048201T01a-A1

Set-up no.:	2				
Op. Mode:	1 (WLAN 5 GHz | ac Mode | B.W. 40 MHz | Power Settings: 6)				
	Channel No.	Nominal bandwidth	26 dB Bandwidth [MHz]	99% Occupied Bandwidth [MHz]	Diagram no.
UN-II-1	46	40	40.15	36.25	Remark 1
UN-II-2A	62		40.75	36.25	Remark 1
UN-II-2C	102		39.85	36.25	Remark 1
UN-NII-3	159		40.45	36.25	Remark 1

Remark 1: See diagrams in separate annex TR18-1-0048201T01a-A1

Set-up no.:	2				
Op. Mode:	1 (WLAN 5 GHz | ac Mode | B.W. 80 MHz | Power Settings: 6)				
	Channel No.	Nominal bandwidth	26 dB Bandwidth [MHz]	99% Occupied Bandwidth [MHz]	Diagram no.
UN-II-1	42	80	83.00	76.00	Remark 1
UN-II-2A	58		83.00	76.00	Remark 1
UN-II-2C	106		84.00	76.50	Remark 1
UN-NII-3	155		83.00	76.00	Remark 1

Remark 1: See diagrams in separate annex TR18-1-0048201T01a-A1

5.3.8. Verdict (assignment): **pass**

5.4. RF Parameter – Peak Power Spectral Density (PPSD)

5.4.1. Test location and equipment (for reference numbers please see chapter 'List of test equipment')

test location	☒ CETECOM Essen (Chapter. 2.2.1)		☐ Please see Chapter. 2.2.2		☐ Please see Chapter. 2.2.3	
test site	☐ 441 EMI SAR	☐ 487 SAR NSA	☐ 337 OATS	☒ 347 Radio.lab.	☐	☐
receiver	☐ 377 ESCS30	☐ 001 ESS	☒ 489 ESU	☐	☐	☐
spectr. analys.	☐ 215 FSU	☐ 120 FSEM	☐ 264 FSEK	☐	☐	☐
power supply	☐ 456 EA 3013A	☐ 457 EA 3013A	☐ 459 EA 2032-50	☐ 268 EA- 3050	☐ 494 AG6632A	☒ 498 NGPE 40
otherwise	☒ 530 10dB Attenuator			☒ cable K15		

5.4.2. References

FCC	☒ Part 15 Subpart C, §15.407(a)(1)(2)(3)(4)
ISED	☒ RSS-247, Issue 2: chapter 6.2 and subchapters
ANSI	☒ C63.10-2013
KDB Guidances no.	☒ 789033 D02 General UNII test procedures v01r04: Subchapter F ☒ 922611 D01 Multiple transmitter output v02r01
Limits [dBm/MHz]	☒ U-NII 1: 5.15-5.25 GHz: **FCC Outdoor access point:** 17dBm/MHz **FCC Indoor Access Point:** 17dBm/MHz **FCC Mobile & Portable client:** 11dBm/MHz **ISED:** ☒ vehicle equipment by OEM ☒ other device: 10 dBm/MHz
	☒ U-NII2: 5.25-5.35 GHz: **FCC/ ISED:** 11dBm
	☒ U-NII2+extension: 5.47-5.725 GHz: **FCC/ ISED:** 11dBm/MHz
Limits [dBm/500kHz]	☒ U-NII3: 5.725-5.85 GHz: **FCC/ ISED:** 30dBm/500kHz

Remark: --

5.4.3. EUT settings

- different channels have been measured for each transmitting sub-band
- The EUT was instructed to send with maximum power (if adjustable) according applicants instructions
- ☐ MIMO applicable measurement techniques (KDB 992611)
- ☒ no MIMO applicable

5.4.4. Measurement Method:

☒ SA-1: The procedures were followed for measuring the average power spectrum as described under chapter "maximum conducted output power": steps (i) to (viii). The measurements have been performed for each output RF-port if applicable. A screenshot and data bins transfer for further calculations were recorded. If the device contains more then one RF-ouput port, MIMO calculation procedures have been followed according KDB662911, Chapter E.2 a) "Measure and sum spectra across the outputs". Resulting maximum PSD is reported for the MIMO condition.

The measured value is corrected due to external measuring set-up path losses and the resulting value is compared with the standard requirement. If the limit is E.I.R.P limit the antenna gain is added, eventually the array gain for MIMO systems.

5.4.4.1. Results:

Set-up no.:	2					
Op. Mode:	1 (20MHz nominal bandwidth)					
Band	Channel No.	Nominal bandwidth	Power spectral density [dBm/MHz]			Diagram no.
			a-Mode	n20-Mode	ac20-Mode	
UN-II-1	36	20	-2.51	--	--	Remark 1
	40		--	-1.17	--	Remark 1
	48		--	--	1.12	Remark 1
UN-II-2A	52		--	-2.48	--	Remark 1
	56		--	--	-6.26	Remark 1
	64		-3.26	--	--	Remark 1
UN-II-2C	100		-2.78	--	--	Remark 1
	116		--	-2.91	--	Remark 1
	140		--	--	1.06	Remark 1
UN-NII-3	149		-6.79	--	--	Remark 1
	157		--	-5.52	--	Remark 1
	165		--	--	-0.83	Remark 1

Remark 1: Only results for worst case modes are displayed, for additional information please refer to diagrams in separate annex TR18-1-0048201T01a-A1

Set-up no.:	2				
Op. Mode:	1 (40MHz nominal bandwidth)				
Band	Channel No.	Nominal bandwidth	Power spectral density [dBm/MHz]		Diagram no.
			n40-Mode	ac40-Mode	
UN-II-1	38	40	-7.46	--	Remark 1
	46		--	-9.64	Remark 1
UN-II-2A	54		-7.12	--	Remark 1
	62		--	-9.22	Remark 1
UN-II-2C	102		-7.16	-9.74	Remark 1
UN-NII-3	151		-11.23	--	Remark 1
	159		--	-13.16	Remark 1

Remark 1: Only results for worst case modes are displayed, for additional information please refer to diagrams in separate annex TR18-1-0048201T01a-A1

Set-up no.:	2			
Op. Mode:	1 (80MHz nominal bandwidth)			
Band	Channel No.	Nominal bandwidth	Power spectral density [dBm/MHz]	Diagram no.
			AC80-Mode	
UN-II-1	42	80	-15.99	Remark 1
UN-II-2A	58		-15.15	Remark 1
UN-II-2C	106		-16.55	Remark 1
UN-II-3	155		-20.54	Remark 1

Remark 1: Only results for worst case modes are displayed, for additional information please refer to diagrams in separate annex TR18-1-0048201T01a-A1

5.4.5. Verdict: Passed

5.5. RF-Parameter – Frequency Stability

5.5.1.Test location and equipment (for reference numbers please see chapter 'List of test equipment')

test location	☒ CETECOM Essen (Chapter. 2.2.1)		☐ 443 System CTC-FAR-EMI-		☐ Please see Chapter. 2.2.3	
test site	☐ 441 EMI SAR	☐ 487 SAR NSA	☐ 337 OATS	☒ 347 Radio.lab.	☐	☐
receiver	☐ 377 ESCS30	☐ 001 ESS	☒ 489 ESU 40	☐ 620 ESU 26	☐	☐
otherwise	☐ 600 NRVD	☐ 357 NRV-Z1	☐ 693 TS8997			
spectr. analys.	☐ 683 FSU	☐ 120 FSEM	☐ 264 FSEK	☐ 714 FSW 67	☐	☐
power supply	☐ 456 EA 3013A	☐ 457 EA 3013A	☐ 459 EA 2032-50	☐ 268 EA- 3050	☐ 494 AG6632A	☐ 354 NGPE 40
otherwise	☒ 613 20 dB Attenuator	☐ 248 6 dB Attenuator	☐ 529 Power divider	☐ - cable OTA20	☐ 530 10dB Atten	☐ K5 Cable
Supply voltage	☐ 230 V 50 Hz via public mains		☒ 13.5 V DC			

5.5.2. Requirements:

ISED	☒ RSS-Gen, Issue5 , Chapter 6.11
Remark	Frequency stability is a measure of frequency drift due to temperature and supply voltage variations, with reference to the frequency measured at an appropriate reference temperature and the rated supply voltage.

5.5.3. EUT settings

For FHSS-systems hopping mode was switched-off so fixed two different channels could be measured.
The EUT was instructed to send with maximum power (if adjustable) according applicants instructions.

5.5.4. Measurement method

1. The First Measurement was done at Normal Temperature +20°C and ±15% of the supply voltage.
2. The Second Measurement was done at 3 different Temperatures -20°C (-4°F), +20°C (+68°F) and +50°C (+122°F), and the nominal supply Voltage

3. Also the 99% emission bandwidth was measured. Two markers are placed on frequency points such that left to lower f-marker and right to higher f-marker only 1% of the TX-power is contained. Between the markers, 99% of the power is laying.

5.5.5. Spectrum-Analyzer Settings

Span	Set as to fully display the emissions and approximate 20dB below the PEAK level
Resolution Bandwidth (RBW)	Set to approx. 1% …3% of the emission width
Video Bandwidth (VBW)	3 times the resolution bandwidth
Sweep time	Coupled and low enough to have no gaps within power envelope
Detector	Sample (if bin width: Span/no. of frequency points SA < 0.5*RBW SA otherwise Peak detector)
Sweep mode	Repetitive Mode, Max hold

5.5.6. Results Extreme Voltage

				Vnom			Vmin			Vmax		
Mode	Limit Left [MHz]	Limit Right [MHz]	Center Frequency [MHz]	Band Edge Left [MHz]	Band Edge Right [MHz]	Verdict	Band Edge Left [MHz]	Band Edge Right [MHz]	Verdict	Band Edge Left [MHz]	Band Edge Right [MHz]	Verdict
a20	5150,00	5250,00	5180,00	5171,70	5188,10	PASS	5171,6	5188,4	PASS	5171,6	5188,4	PASS
	5250,00	5350,00	5320,00	5311,50	5328,10	PASS	5311,4	5328,2	PASS	5311,4	5328,2	PASS
	5470,00	5725,00	5500,00	5491,70	5508,10	PASS	5491,6	5508,4	PASS	5491,6	5508,4	PASS
	5725,00	5850,00	5745,00	5736,50	5753,10	PASS	5736,6	5753,2	PASS	5736,6	5753,2	PASS
	5725,00	5850,00	5825,00				5816,6	5833,4	PASS	5816,6	5833,2	PASS
n20	5150,00	5250,00	5200,00	5191,10	5208,70	PASS						
	5250,00	5350,00	5260,00	5251,10	5268,70	PASS						
	5470,00	5725,00	5580,00	5571,10	5588,70	PASS						
	5725,00	5850,00	5785,00	5776,10	5793,70	PASS						
ac20	5150,00	5250,00	5240,00	5230,90	5248,70	PASS						
	5250,00	5350,00	5280,00	5271,10	5288,70	PASS						
	5470,00	5725,00	5700,00	5691,10	5708,70	PASS						
	5725,00	5850,00	5825,00	5816,10	5833,70	PASS						

				Vnom			Vmin			Vmax		
Mode	Limit Left [MHz]	Limit Right [MHz]	Center Frequency [MHz]	Band Edge Left [MHz]	Band Edge Right [MHz]	Verdict	Band Edge Left [MHz]	Band Edge Right [MHz]	Verdict	Band Edge Left [MHz]	Band Edge Right [MHz]	Verdict
n40	5150,00	5250,00	5190,00				5171,87	5208,13	PASS	5171,87	5208,13	PASS
	5250,00	5350,00	5270,00	5252,02	5287,98	PASS	5251,87	5288,13	PASS	5251,87	5288,13	PASS
	5470,00	5725,00	5510,00	5491,72	5527,98	PASS						
	5725,00	5850,00	5755,00	5736,72	5772,98	PASS						
ac40	5150,00	5250,00	5230,00	5211,72	5247,98	PASS						
	5250,00	5350,00	5310,00	5291,72	5327,98	PASS						
	5470,00	5725,00	5510,00	5491,72	5527,98	PASS						
	5725,00	5850,00	5795,00	5776,72	5812,98	PASS						

				Vnom			Vmin			Vmax		
Mode	Limit Left [MHz]	Limit Right [MHz]	Center Frequency [MHz]	Band Edge Left [MHz]	Band Edge Right [MHz]	Verdict	Band Edge Left [MHz]	Band Edge Right [MHz]	Verdict	Band Edge Left [MHz]	Band Edge Right [MHz]	Verdict
ac80	5150,00	5250,00	5210				5171,53846	5247,94872	PASS	5171,53846	5247,94872	PASS
	5250,00	5350,00	5290	5251,75	5327,75	PASS	5251,53846	5327,94872	PASS	5251,53846	5327,94872	PASS
	5470,00	5725,00	5530	5491,75	5568,25	PASS						
	5725,00	5850,00	5775	5736,75	5812,75	PASS						

5.5.7. Results Extreme Temperature

				Tnom			Tmin			Tmax		
Mode	Limit Left [MHz]	Limit Right [MHz]	Center Frequency [MHz]	Band Edge Left [MHz]	Band Edge Right [MHz]	Verdict	Band Edge Left [MHz]	Band Edge Right [MHz]	Verdict	Band Edge Left [MHz]	Band Edge Right [MHz]	Verdict
a20	5150,00	5250,00	5180,00	5171,70	5188,10	PASS	5171,6	5188,4	PASS	5171,6	5188,4	PASS
	5250,00	5350,00	5320,00	5311,50	5328,10	PASS	5311,4	5328,2	PASS	5311,4	5328,2	PASS
	5470,00	5725,00	5500,00	5491,70	5508,10	PASS	5491,6	5508,4	PASS	5491,6	5508,4	PASS
	5725,00	5850,00	5745,00	5736,50	5753,10	PASS	5736,6	5753,4	PASS	5736,6	5753,2	PASS
	5725,00	5850,00	5825,00				5816,6	5833,4	PASS	5816,6	5833,4	PASS
n20	5150,00	5250,00	5200,00	5191,10	5208,70	PASS						
	5250,00	5350,00	5260,00	5251,10	5268,70	PASS						
	5470,00	5725,00	5580,00	5571,10	5588,70	PASS						
	5725,00	5850,00	5785,00	5776,10	5793,70	PASS						
ac20	5150,00	5250,00	5240,00	5230,90	5248,70	PASS						
	5250,00	5350,00	5280,00	5271,10	5288,70	PASS						
	5470,00	5725,00	5700,00	5691,10	5708,70	PASS						
	5725,00	5850,00	5825,00	5816,10	5833,70	PASS						

				Tnom			Tmin			Tmax		
Mode	Limit Left [MHz]	Limit Right [MHz]	Center Frequency [MHz]	Band Edge Left [MHz]	Band Edge Right [MHz]	Verdict	Band Edge Left [MHz]	Band Edge Right [MHz]	Verdict	Band Edge Left [MHz]	Band Edge Right [MHz]	Verdict
n40	5150,00	5250,00	5190,00				5171,87	5208,13	PASS	5171,87	5208,13	PASS
	5250,00	5350,00	5270,00	5252,02	5287,98	PASS	5251,87	5288,13	PASS	5251,87	5288,13	PASS
	5470,00	5725,00	5510,00	5491,72	5527,98	PASS						
	5725,00	5850,00	5755,00	5736,72	5772,98	PASS						
ac40	5150,00	5250,00	5230,00	5211,72	5247,98	PASS						
	5250,00	5350,00	5310,00	5291,72	5327,98	PASS						
	5470,00	5725,00	5510,00	5491,72	5527,98	PASS						
	5725,00	5850,00	5795,00	5776,72	5812,98	PASS						

				Tnom / Vnom			Tmin			Tmax		
Mode	Limit Left [MHz]	Limit Right [MHz]	Center Frequency [MHz]	Band Edge Left [MHz]	Band Edge Right [MHz]	Verdict	Band Edge Left [MHz]	Band Edge Right [MHz]	Verdict	Band Edge Left [MHz]	Band Edge Right [MHz]	Verdict
ac80	5150,00	5250,00	5210				5172,05128	5248,46154	PASS	5171,53846	5247,94872	PASS
	5250,00	5350,00	5290	5251,75	5327,75	PASS	5252,05128	5327,94872	PASS	5251,53846	5327,94572	PASS
	5470,00	5725,00	5530	5491,75	5568,25	PASS						
	5725,00	5850,00	5775	5736,75	5812,75	PASS						

5.6. General Limit - Radiated field strength emissions below 30 MHz

5.6.1. Test location and equipment

test location	☒ CETECOM Essen (Chapter. 2.2.1)		☐ Please see Chapter. 2.2.2		☐ Please see Chapter. 2.2.3	
test site	☒ 441 EMI SAR	☐ 487 SAR NSA	☐ 347 Radio.lab.		☐	☐
receiver	☐ 377 ESCS30	☒ 001 ESS	☐	☐	☐	☐
spectr. analys.	☐ 584 FSU	☐ 120 FSEM	☐ 264 FSEK	☐	☐	☐
antenna	☐ 574 BTA-L	☐ 133 EMCO3115	☐ 302 BBHA9170	☐ 289 CBL 6141	☒ 030 HFH-Z2	☐ 477 GPS
signaling	☐ 392 MT8820A	☐ 371 CBT32	☐ 547 CMU	☐ 594 CMW		
otherwise	☐ 400 FTC40x15E	☐ 401 FTC40x15E	☐ 110 USB LWL	☐ 482 Filter Matrix	☐ 378 RadiSense	
DC power	☐ 671 EA-3013S	☒ 457 EA 3013A	☐ 459 EA 2032-50	☐ 268 EA- 3050	☐ 494 AG6632A	☐ 354 NGPE 40
Supply voltage	☐ 230 V 50 Hz via public mains		☒ 13.5 V DC			

5.6.2. Requirements

FCC	Part 15, Subpart C, §15.205 & §15.209			
ANSI	C63.10-2013			
Frequency [MHz]	Field strength limit [µV/m]	[dBµV/m]	Distance [m]	Remarks
0.009 – 0.490	2400/f (kHz)	67.6 – 20Log(f) (kHz)	300	Correction factor used due to measurement distance of 3 m
0.490 – 1.705	24000/f (kHz)	87.6 – 20Log(f) (kHz)	30	Correction factor used due to measurement distance of 3 m
1.705 – 30	30	29.5	30	Correction factor used due to measurement distance of 3 m

5.6.3. Test condition and test set-up

Signal link to test system (if used):		☐ air link	☐ cable connection	☒ none
EUT-grounding		☒ none	☐ with power supply	☐ additional connection
Equipment set up		☒ table top		☐ floor standing
Climatic conditions		Temperature: (22±3°C)		Rel. humidity: (40±20)%
EMI-Receiver or Analyzer Settings	Scan data	☒ 9 – 150 kHz RBW/VBW = 200 Hz Scan step = 80 Hz ☒ 150 kHz – 30 MHz RBW/VBW = 9 kHz Scan step = 4 kHz ☐ other:		
	Scan-Mode Detector Mode: Sweep-Time	☒ 6 dB EMI-Receiver Mode ☐ 3dB Spectrum analyser Mode Peak (pre-measurement) and Quasi-PK/Average (final if applicable) Repetitive-Scan, max-hold Coupled – calibrated display if continuous signal otherwise adapted to EUT's individual transmission duty-cycle		
General measurement procedures		Please see chapter "Test system set-up radiated magnetic field measurements below 30 MHz"		

5.6.4. Radiated Field Strength Emissions – 9 kHz to 30 MHz Results

Radiated Field Strength Emissions – 9 kHz to 30 MHz								
Temperature :+21 °C		**Technology: WLAN 5 GHz 802.11a/n**			**TX-Fixed Channel (Modulated)**			
Diagr No. (Remark 1)	Test Settings Mode | B.W. | Data Rate | Frequency Band - Channel (Frequency)	Set-up no.	OP-mode no.	Used detector			Verdict
				PK	AV	QP	
2.01a	a Mode | 20 MHz | 6 Mbit | U-NII-1-Ch 36 5180 MHz | Standing	1	1	☒	☐	☐	**Pass**
2.01b	a Mode | 20 MHz | 6 Mbit | U-NII-1-Ch 36 5180 MHz | laying	1	1	☒	☐	☐	**Pass**
2.02a	a Mode | 20 MHz | 6 Mbit | U-NII-2A-Ch 64 5320 MHz | Standing	1	1	☒	☐	☐	**Pass**
2.02b	a Mode | 20 MHz | 6 Mbit | U-NII-2A-Ch 64 5320 MHz | Laying	1	1	☒	☐	☐	**Pass**
2.03a	a Mode | 20 MHz | 6 Mbit | U-NII-2C-Ch 100 5500 MHz | Standing	1	1	☒	☐	☐	**Pass**
2.03b	a Mode | 20 MHz | 6 Mbit | U-NII-2C-Ch 100 5500 MHz | Laying	1	1	☒	☐	☐	**Pass**
2.04a	a Mode | 20 MHz | 6 Mbit | U-NII-3-Ch 149 5745 MHz | Standing	1	1	☒	☐	☐	**Pass**
2.04b	a Mode | 20 MHz | 6 Mbit | U-NII-3-Ch 149 5745 MHz | Laying	1	1	☒	☐	☐	**Pass**
Remark 1: See diagrams in separate Annex 1, only worst case modulation was tested							

5.6.5. Correction factors due to reduced meas. distance (f< 30 MHz)

The used correction factors when the measurement distance is reduced compared to regulatory measurement distance, are calculated according Extrapolation formulas valid for EUT's with maximum dimension of 0.625xLambda. Formula 2+3+4 as presented in ANSI C63.10, Chapter 6.4.4 are used for the calculations of proper extrapolation factors.

Frequency -Range	f [kHz/MHz]	Lambda [m]	Far-Field Point [m]	Distance Limit accord. 15.209 [m]	1st Condition (dmeas< $D_{near-field}$)	2'te Condition (Limit distance bigger $d_{near-field}$)	Distance Correction accord. Formula
kHz	9,00E+03	33333,33	5305,17	300	fulfilled	not fulfilled	-80,00
	1,00E+04	30000,00	4774,65		fulfilled	not fulfilled	-80,00
	2,00E+04	15000,00	2387,33		fulfilled	not fulfilled	-80,00
	3,00E+04	10000,00	1591,55		fulfilled	not fulfilled	-80,00
	4,00E+04	7500,00	1193,66		fulfilled	not fulfilled	-80,00
	5,00E+04	6000,00	954,93		fulfilled	not fulfilled	-80,00
	6,00E+04	5000,00	795,78		fulfilled	not fulfilled	-80,00
	7,00E+04	4285,71	682,09		fulfilled	not fulfilled	-80,00
	8,00E+04	3750,00	596,83		fulfilled	not fulfilled	-80,00
	9,00E+04	3333,33	530,52		fulfilled	not fulfilled	-80,00
	1,00E+05	3000,00	477,47		fulfilled	not fulfilled	-80,00
	1,25E+05	2400,00	381,97		fulfilled	not fulfilled	-80,00
	2,00E+05	1500,00	238,73		fulfilled	fulfilled	-78,02
	3,00E+05	1000,00	159,16		fulfilled	fulfilled	-74,49
	4,00E+05	750,00	119,37		fulfilled	fulfilled	-72,00
	4,90E+05	612,24	97,44		fulfilled	fulfilled	-70,23
	5,00E+05	600,00	95,49	30	fulfilled	not fulfilled	-40,00
	6,00E+05	500,00	79,58		fulfilled	not fulfilled	-40,00
	7,00E+05	428,57	68,21		fulfilled	not fulfilled	-40,00
	8,00E+05	375,00	59,68		fulfilled	not fulfilled	-40,00
	9,00E+05	333,33	53,05		fulfilled	not fulfilled	-40,00
MHz	1,00	300,00	47,75		fulfilled	not fulfilled	-40,00
	1,59	188,50	**30,00**		fulfilled	not fulfilled	-40,00
	2,00	150,00	23,87		fulfilled	fulfilled	-38,02
	3,00	100,00	15,92		fulfilled	fulfilled	-34,49
	4,00	75,00	11,94		fulfilled	fulfilled	-32,00
	5,00	60,00	9,55		fulfilled	fulfilled	-30,06
	6,00	50,00	7,96		fulfilled	fulfilled	-28,47
	7,00	42,86	6,82		fulfilled	fulfilled	-27,13
	8,00	37,50	5,97		fulfilled	fulfilled	-25,97
	9,00	33,33	5,31		fulfilled	fulfilled	-24,95
	10,00	30,00	4,77		fulfilled	fulfilled	-24,04
	10,60	28,30	4,50		fulfilled	fulfilled	-23,53
	11,00	27,27	4,34		fulfilled	fulfilled	-23,21
	12,00	25,00	3,98		fulfilled	fulfilled	-22,45
	13,56	22,12	3,52		fulfilled	fulfilled	-21,39
	15,00	20,00	3,18		fulfilled	fulfilled	-20,51
	15,92	18,85	**3,00**		fulfilled	fulfilled	-20,00
	17,00	17,65	2,81		not fulfilled	fulfilled	-20,00
	18,00	16,67	2,65		not fulfilled	fulfilled	-20,00
	20,00	15,00	2,39		not fulfilled	fulfilled	-20,00
	21,00	14,29	2,27		not fulfilled	fulfilled	-20,00
	23,00	13,04	2,08		not fulfilled	fulfilled	-20,00
	25,00	12,00	1,91		not fulfilled	fulfilled	-20,00
	27,00	11,11	1,77		not fulfilled	fulfilled	-20,00
	29,00	10,34	1,65		not fulfilled	fulfilled	-20,00
	30,00	10,00	1,59		not fulfilled	fulfilled	-20,00

5.7. General Limit - Radiated field strength emissions, 30 MHz - 1 GHz

5.7.1. Test location and equipment

test location	☒ CETECOM Essen (Chapter. 2.2.1)		☐ Please see Chapter. 2.2.2		☐ Please see Chapter. 2.2.3	
test site	☒ 441 EMI SAR	☒ 487 SAR NSA				
receiver	☐ 377 ESCS30	☒ 001 ESS	☐ 489 ESU 40	☐ 620 ESU 26		
spectr. analys.	☐ 584 FSU	☐ 120 FSEM	☐ 264 FSEK			
antenna	☒ 574 BTA-L	☐ 133 EMCO3115	☐ 302 BBHA9170	☐ 289 CBL 6141	☐ 030 HFH-Z2	☐ 477 GPS
signaling	☐ 392 MT8820A	☐ 371 CBT32	☐ 547 CMU	☐ 594 CMW		
otherwise	☐ 400 FTC40x15E	☐ 401 FTC40x15E	☐ 110 USB LWL	☒ 482 Filter Matrix		
DC power	☐ 671 EA-3013S	☒ 457 EA 3013A	☐ 459 EA 2032-50	☐ 268 EA- 3050	☐ 494 AG6632A	☐ 498 NGPE
Supply voltage	☐ 230 V 50 Hz via public mains		☒ 13.5V DC			

5.7.2. Requirements/Limits

FCC		☐ Part 15 Subpart B, §15.109, class B ☒ Part 15 Subpart C, §15.209 @ frequencies defined in §15.205	
ANSI		☐ C63.4-2014 ☒ C63.10-2013	
Limit	Frequency [MHz]	Radiated emissions limits, 3 meters	
		QUASI Peak [µV/m]	QUASI-Peak [dBµV/m]
	30 - 88	100	40.0
	88 - 216	150	43.5
	216 - 960	200	46.0
	above 960	500	54.0

5.7.3. Restricted bands of operation (FCC §15.205 / RSS-Gen, Issue 5)

MHz	MHz	MHz	GHz
0.090-0.110	16.42-16.423	399.9-410	4.5-5.15
0.495-0.505	16.69475-16.69525	608-614	5.35-5.46
2.1735-2.1905	16.80425-16.80475	960-1240	7.25-7.75
4.125-4.128	25.5-25.67	1300-1427	8.025-8.5
4.20725-4.20775	37.5-38.25	1645.5-1646.5	9.3-9.5
6.215-6.218	73-74.6	1660-1710	10.6-12.7
6.26775-6.26825	74.8-75.2	1718.8-1722.2	13.25-13.4
6.31175-6.31225	108-121.94	2200-2300	14.47-14.5
8.291-8.294	123-138	2310-2390	15.35-16.2
8.362-8.366	149.9-150.05	2483.5-2500	17.7-21.4
8.37625-8.38675	156.52475-156.52525	2690-2900	22.01-23.12
8.41425-8.41475	156.7-156.9	3260-3267	23.6-24.0
12.29-12.293	162.0125-167.17	3332-3339	31.2-31.8
12.51975-12.52025	167.72-173.2	3345.8-3358	36.43-36.5
12.57675-12.57725	240-285	3600-4400	--
13.36-13.41	322-335.4	--	--
Remark: only spurious emissions are allowed within these frequency bands not exceeding the limits per §15.209			

5.7.4. Test condition and measurement test set-up

Signal link to test system (if used):		☐ air link	☐ cable connection	☒ none
EUT-grounding		☒ none	☐ with power supply	☐ additional connection
Equipment set up		☒ table top 0.8m height		☐ floor standing
Climatic conditions		Temperature: (22±3°C)		Rel. humidity: (40±20)%
EMI-Receiver (Analyzer) Settings	Scan frequency range:	☒ 30 – 1000 MHz ☐ other:		
	Scan-Mode	☒ 6 dB EMI-Receiver Mode ☐ 3 dB spectrum analyser mode		
	Detector	Peak / Quasi-peak		
	RBW/VBW	100 kHz/300 kHz		
	Mode:	Repetitive-Scan, max-hold		
	Scan step	80 kHz		
	Sweep-Time	Coupled – calibrated display if continuous tx-signal otherwise adapted to EUT's individual duty-cycle		
General measurement procedures		Please see chapter "Test system set-up for electric field measurement in the range 30 MHz to 1 GHz"		

5.7.5. Radiated Field Strength Emissions – 30 MHz to 1 GHz Results

Radiated Field Strength Emissions – 30 MHz to 1 GHz

Temperature :+21 °C	Technology: WLAN 5 GHz 802.11a	TX-Fixed Channel (Modulated)

Diagr No. (Remark 1)	Test Settings Mode | B.W. | Data Rate | Frequency Band - Channel (Frequency)	Set-up no.	OP-mode no.	Used detector			Verdict
				PK	AV	QP	
3.01a	a Mode | 20 MHz | 6 Mbit | U-NII-1-Ch 36 5180 MHz | Standing	1	1	☒	☐	☐	**Pass**
3.01b	a Mode | 20 MHz | 6 Mbit | U-NII-1-Ch 36 5180 MHz | laying	1	1	☒	☐	☐	**Pass**
3.02a	a Mode | 20 MHz | 6 Mbit | U-NII-2A-Ch 64 5320 MHz | Standing	1	1	☒	☐	☐	**Pass**
3.02b	a Mode | 20 MHz | 6 Mbit | U-NII-2A-Ch 64 5320 MHz | Laying	1	1	☒	☐	☐	**Pass**
3.03a	a Mode | 20 MHz | 6 Mbit | U-NII-2C-Ch 100 5500 MHz | Standing	1	1	☒	☐	☐	**Pass**
3.03b	a Mode | 20 MHz | 6 Mbit | U-NII-2C-Ch 100 5500 MHz | Laying	1	1	☒	☐	☐	**Pass**
3.04a	a Mode | 20 MHz | 6 Mbit | U-NII-3-Ch 149 5745 MHz | Standing	1	1	☒	☐	☐	**Pass**
3.04b	a Mode | 20 MHz | 6 Mbit | U-NII-3-Ch 149 5745 MHz | Laying	1	1	☒	☐	☐	**Pass**
3.05a	n Mode | 20 MHz | MCS3 | U-NII-1-Ch 40 5200 MHz | Standing	1	1	☒	☐	☐	**Pass**
3.05b	n Mode | 20 MHz | MCS3 | U-NII-1-Ch 40 5200 MHz | laying	1	1	☒	☐	☐	**Pass**
3.06a	n Mode | 20 MHz | MCS3 | U-NII-2A-Ch 52 5260 MHz | Standing	1	1	☒	☐	☐	**Pass**
3.06b	n Mode | 20 MHz | MCS3 | U-NII-2A-Ch 52 5260 MHz | Laying	1	1	☒	☐	☐	**Pass**
3.07a	n Mode | 20 MHz | MCS3 | U-NII-2C-Ch 116 5580 MHz | Standing	1	1	☒	☐	☐	**Pass**
3.07b	n Mode | 20 MHz | MCS3 | U-NII-2C-Ch 116 5580 MHz | Laying	1	1	☒	☐	☐	**Pass**
3.08a	n Mode | 20 MHz | MCS3 | U-NII-3-Ch 157 5785 MHz | Standing	1	1	☒	☐	☐	**Pass**
3.08b	n Mode | 20 MHz | MCS3 | U-NII-3-Ch 157 5785 MHz | Laying	1	1	☒	☐	☐	**Pass**

3.09a	ac Mode | 20 MHz | MCS4 | U-NII-1-Ch 48 5240 MHz | Standing	1	1	☒	☐	☐	**Pass**
3.09b	ac Mode | 20 MHz | MCS4 | U-NII-1-Ch 48 5240 MHz | laying	1	1	☒	☐	☐	**Pass**
3.10a	ac Mode | 20 MHz | MCS4 | U-NII-2A-Ch 56 5280 MHz | Standing	1	1	☒	☐	☐	**Pass**
3.10b	ac Mode | 20 MHz | MCS4 | U-NII-2A-Ch 56 5280 MHz | Laying	1	1	☒	☐	☐	**Pass**
3.11a	ac Mode | 20 MHz | MCS4 | U-NII-2C-Ch 140 5700 MHz | Standing	1	1	☒	☐	☐	**Pass**
3.11b	ac Mode | 20 MHz | MCS4 | U-NII-2C-Ch 140 5700 MHz | Laying	1	1	☒	☐	☐	**Pass**
3.12a	ac Mode | 20 MHz | MCS4 | U-NII-3-Ch 165 5825 MHz | Standing	1	1	☒	☐	☐	**Pass**
3.12b	ac Mode | 20 MHz | MCS4 | U-NII-3-Ch 165 5825 MHz | Laying	1	1	☒	☐	☐	**Pass**

3.13a	n Mode | 40 MHz | MCS4 | U-NII-1-Ch 38 5190 MHz | Standing	1	1	☒	☐	☐	**Pass**
3.13b	n Mode | 40 MHz | MCS4 | U-NII-1-Ch 38 5190 MHz | laying	1	1	☒	☐	☐	**Pass**
3.14a	n Mode | 40 MHz | MCS4 | U-NII-2A-Ch 54 5270 MHz | Standing	1	1	☒	☐	☐	**Pass**
3.14b	n Mode | 40 MHz | MCS4 | U-NII-2A-Ch 54 5270 MHz | Laying	1	1	☒	☐	☐	**Pass**
3.15a	n Mode | 40 MHz | MCS4 | U-NII-2C-Ch 102 5510 MHz | Standing	1	1	☒	☐	☐	**Pass**
3.15b	n Mode | 40 MHz | MCS4 | U-NII-2C-Ch 102 5510 MHz | Laying	1	1	☒	☐	☐	**Pass**
3.16a	n Mode | 40 MHz | MCS4 | U-NII-3-Ch 151 5755 MHz | Standing	1	1	☒	☐	☐	**Pass**
3.16b	n Mode | 40 MHz | MCS4 | U-NII-3-Ch 151 5755 MHz | Laying	1	1	☒	☐	☐	**Pass**

3.17a	ac Mode | 40 MHz | MCS0 | U-NII-1-Ch 46 5230 MHz | Standing	1	1	☒	☐	☐	**Pass**
3.17b	ac Mode | 40 MHz | MCS0 | U-NII-1-Ch 46 5230 MHz | laying	1	1	☒	☐	☐	**Pass**
3.18a	ac Mode | 40 MHz | MCS0 | U-NII-2A-Ch 62 5310 MHz | Standing	1	1	☒	☐	☐	**Pass**
3.18b	ac Mode | 40 MHz | MCS0 | U-NII-2A-Ch 62 5310 MHz | Laying	1	1	☒	☐	☐	**Pass**
3.19a	ac Mode | 40 MHz | MCS0 | U-NII-2C-Ch 134 5670 MHz | Standing	1	1	☒	☐	☐	**Pass**
3.19b	ac Mode | 40 MHz | MCS0 | U-NII-2C-Ch 134 5670 MHz | Laying	1	1	☒	☐	☐	**Pass**
3.20a	ac Mode | 40 MHz | MCS0 | U-NII-3-Ch 159 5795 MHz | Standing	1	1	☒	☐	☐	**Pass**
3.20b	ac Mode | 40 MHz | MCS0 | U-NII-3-Ch 159 5795 MHz | Laying	1	1	☒	☐	☐	**Pass**

3.21a	ac Mode | 80 MHz | MCS0 | U-NII-1-Ch 42 5210 MHz | Standing	1	1	☒	☐	☐	**Pass**
3.21b	ac Mode | 80 MHz | MCS0 | U-NII-1-Ch 42 5210 MHz | laying	1	1	☒	☐	☐	**Pass**
3.22a	ac Mode | 80 MHz | MCS0 | U-NII-2A-Ch 58 5290 MHz | Standing	1	1	☒	☐	☐	**Pass**
3.22b	ac Mode | 80 MHz | MCS0 | U-NII-2A-Ch 58 5290 MHz | Laying	1	1	☒	☐	☐	**Pass**
3.23a	ac Mode | 80 MHz | MCS0 | U-NII-2C-Ch 106 5530 MHz | Standing	1	1	☒	☐	☐	**Pass**
3.23b	ac Mode | 80 MHz | MCS0 | U-NII-2C-Ch 106 5530 MHz | Laying	1	1	☒	☐	☐	**Pass**
3.24a	ac Mode | 80 MHz | MCS0 | U-NII-3-Ch 155 5775 MHz | Standing	1	1	☒	☐	☐	**Pass**
3.24b	ac Mode | 80 MHz | MCS0 | U-NII-3-Ch 155 5775 MHz | Laying	1	1	☒	☐	☐	**Pass**

5.8. General Limit - Radiated emissions, above 1 GHz

5.8.1. Test location and equipment FAR

test site	☐441 EMI SAR	☐348 EMI cond.	☒443 EMI FAR	☐347 Radio.lab.	☐337 OATS	☐
spectr. analys.	☐584 FSU	☐120 FSEM	☐264 FSEK	☒489 ESU 40	☐	☐
antenna meas	☐574 BTA-L	☐289 CBL 6141	☐608 HL 562	☒549 HL025	☒302 BBHA9170	☐477 GPS
antenna meas	☐123 HUF-Z2	☐132 HUF-Z3	☐030 HFH-Z2	☐376 BBHA9120E		☐
antenna subst	☐071 HUF-Z2	☐020 EMCO3115	☐063 LP 3146	☐303 BBHA9170	☐	☐
multimeter	☐341 Fluke 112	☐	☐	☐	☐	☐
signaling	☐392 MT8820A	☐371 CBT32	☐547 CMU	☐594 CMW		
DCpower	☐611 E3632A	☒087 EA3013	☐354 NGPE 40	☐349 car battery	☐350 Car battery	☐
Supply voltage	☐ 230 V 50 Hz via public mains		☒ 13.5 V DC			

5.8.2. Requirements/Limits

FCC	☐ Part 15 Subpart B, §15.109 class B ☒ Part 15 Subpart C, §15.209 for frequencies defined in §15.205 ☒ Part 15 Subpart C, §15.407(b)(1)(2)(3)(4)(5)(6)(7)(8)			
ANSI	☐ C63.4-2014 ☒ C63.10-2013			
Frequency [MHz]	Limits			
	AV [µV/m]	AV [dBµV/m]	Peak [µV/m]	Peak [dBµV/m] or [dBm/MHz]
above 1 GHz for frequencies as defined in §15.205	500	54.0	5000	74.0 dBµV/m
§15.407(b)(1)(2)(3)(4)	--	--	--	(b)(1): 5.15-5.25GHz: -27dBm eirp (b)(2): 5.25-5.35GHz: -27dBm eirp (b)(3): 5.47-5.725 GHz: -27dBm eirp (b)(4): 5725-5.85GHz: Spectrum mask

5.8.3. Test condition and measurement test set-up

Signal link to test system (if used):		☐ air link	☐ cable connection	☒ none
EUT-grounding		☒ none	☐ with power supply	☐ additional connection
Equipment set up		☒ table top 1.5m height		☐ floor standing
Climatic conditions		Temperature: (22±3°C)		Rel. humidity: (40±20)%
Spectrum-Analyzer settings	Scan frequency range:	☒ 1 – 18 GHz ☐ 18 – 25 GHz ☒ 18 – 40 GHz ☐ other:		
	Scan-Mode	☒ 6 dB EMI-Receiver Mode ☐ 3 dB Spectrum analyser Mode		
	Detector	Peak and Average		
	RBW/VBW	1 MHz / 3 MHz		
	Mode:	Repetitive-Scan, max-hold		
	Scan step	400 kHz		
	Sweep-Time	Coupled – calibrated display if CW signal otherwise adapted to EUT's individual duty-cycle		
General measurement procedures		Please see chapter "Test system set-up for radiated electric field measurements above 1 GHz"		

5.8.4. Radiated Field Strength Emissions – 1 GHz to 40 GHz Results

Radiated Field Strength Emissions – 1 GHz to 7 GHz							
Temperature :+21 °C	**Technology: WLAN 5 GHz 802.11a/n**			**TX-Fixed Channel (Modulated)**			
Diagr No. (Remark 1)	Test Settings Mode B.W. | Data Rate | Channel	Set-up no.	OP-mode no.	Used detector			Verdict
				PK	AV	QP	
4.01a	a Mode | 20 MHz | 6 Mbit | U-NII-1-Ch 36 5180 MHz |	1	1	☒	☒	☐	**Pass**
4.02a	a Mode | 20 MHz | 6 Mbit | U-NII-2A-Ch 64 5320 MHz |	1	1	☒	☒	☐	**Pass**
4.03a	a Mode | 20 MHz | 6 Mbit | U-NII-2C-Ch 100 5500 MHz |	1	1	☒	☒	☐	**Pass**
4.04a	a Mode | 20 MHz | 6 Mbit | U-NII-3-Ch 149 5745 MHz |	1	1	☒	☒	☐	**Pass**
4.05a	n Mode | 20 MHz | MCS3 | U-NII-1-Ch 40 5200 MHz |	1	1	☒	☒	☐	**Pass**
4.06a	n Mode | 20 MHz | MCS3 | U-NII-2A-Ch 52 5260 MHz |	1	1	☒	☒	☐	**Pass**
4.07a	n Mode | 20 MHz | MCS3 | U-NII-2C-Ch 116 5580 MHz |	1	1	☒	☒	☐	**Pass**
4.08a	n Mode | 20 MHz | MCS3 | U-NII-3-Ch 157 5785 MHz |	1	1	☒	☒	☐	**Pass**
4.09a	ac Mode | 20 MHz | MCS4 | U-NII-1-Ch 48 5240 MHz |	1	1	☒	☒	☐	**Pass**
4.10a	ac Mode | 20 MHz | MCS4 | U-NII-2A-Ch 56 5280 MHz |	1	1	☒	☒	☐	**Pass**
4.11a	ac Mode | 20 MHz | MCS4 | U-NII-2C-Ch 140 5700 MHz |	1	1	☒	☒	☐	**Pass**
4.12a	ac Mode | 20 MHz | MCS4 | U-NII-3-Ch 165 5825 MHz |	1	1	☒	☒	☐	**Pass**
4.13a	n Mode | 40 MHz | MCS4 | U-NII-1-Ch 38 5190 MHz |	1	1	☒	☒	☐	**Pass**
4.14a	n Mode | 40 MHz | MCS4 | U-NII-2A-Ch 54 5270 MHz |	1	1	☒	☒	☐	**Pass**
4.15a	n Mode | 40 MHz | MCS4 | U-NII-2C-Ch 102 5510 MHz |	1	1	☒	☒	☐	**Pass**
4.16a	n Mode | 40 MHz | MCS4 | U-NII-3-Ch 151 5755 MHz |	1	1	☒	☒	☐	**Pass**
4.17a	ac Mode | 40 MHz | MCS0 | U-NII-1-Ch 46 5230MHz |	1	1	☒	☒	☐	**Pass**
4.18a	ac Mode | 40 MHz | MCS0 | U-NII-2A-Ch 62 5310 MHz |	1	1	☒	☒	☐	**Pass**
4.19a	ac Mode | 40 MHz | MCS0 | U-NII-2C-Ch 134 5670 MHz |	1	1	☒	☒	☐	**Pass**
4.20a	ac Mode | 40 MHz | MCS0 | U-NII-3-Ch 159 5795 MHz |	1	1	☒	☒	☐	**Pass**
4.21a	ac Mode | 80 MHz | MCS0 | U-NII-1-Ch 42 5210MHz |	1	1	☒	☒	☐	**Pass**
4.22a	ac Mode | 80 MHz | MCS0 | U-NII-2A-Ch 58 5290 MHz |	1	1	☒	☒	☐	**Pass**
4.23a	ac Mode | 80 MHz | MCS0 | U-NII-2C-Ch 106 5530 MHz |	1	1	☒	☒	☐	**Pass**
4.24a	ac Mode | 80 MHz | MCS0 | U-NII-3-Ch 155 5575 MHz |	1	1	☒	☒	☐	**Pass**

5.8.5. Radiated Field Strength Emissions – 7 GHz to 18 GHz Results

Radiated Field Strength Emissions – 7 GHz to 18 GHz							
Temperature :+21 °C	**Technology: WLAN 5 GHz 802.11a/n**			**TX-Fixed Channel (Modulated)**			
Diagram No. (Remark 1)	Test Settings Mode B.W. | Data Rate | Channel	Set-up no.	OP-mode no.	Used detector			Verdict
				PK	AV	QP	
4.01b	a Mode | 20 MHz | 6 Mbit | U-NII-1-Ch 36 5180 MHz |	1	1	☒	☒	☐	**Pass**
4.02b	a Mode | 20 MHz | 6 Mbit | U-NII-2A-Ch 64 5320 MHz |	1	1	☒	☒	☐	**Pass**
4.03b	a Mode | 20 MHz | 6 Mbit | U-NII-2C-Ch 100 5500 MHz |	1	1	☒	☒	☐	**Pass**
4.04b	a Mode | 20 MHz | 6 Mbit | U-NII-3-Ch 149 5745 MHz |	1	1	☒	☒	☐	**Pass**
4.05b	n Mode | 20 MHz | MCS3 | U-NII-1-Ch 40 5200 MHz |	1	1	☒	☒	☐	**Pass**
4.06b	n Mode | 20 MHz | MCS3 | U-NII-2A-Ch 52 5260 MHz |	1	1	☒	☒	☐	**Pass**
4.07b	n Mode | 20 MHz | MCS3 | U-NII-2C-Ch 116 5580 MHz |	1	1	☒	☒	☐	**Pass**
4.08b	n Mode | 20 MHz | MCS3 | U-NII-3-Ch 157 5785 MHz |	1	1	☒	☒	☐	**Pass**
4.09b	ac Mode | 20 MHz | MCS4 | U-NII-1-Ch 48 5240 MHz |	1	1	☒	☒	☐	**Pass**
4.10b	ac Mode | 20 MHz | MCS4 | U-NII-2A-Ch 56 5280 MHz |	1	1	☒	☒	☐	**Pass**
4.11b	ac Mode | 20 MHz | MCS4 | U-NII-2C-Ch 140 5700 MHz |	1	1	☒	☒	☐	**Pass**
4.12b	ac Mode | 20 MHz | MCS4 | U-NII-3-Ch 165 5825 MHz |	1	1	☒	☒	☐	**Pass**
4.13b	n Mode | 40 MHz | MCS4 | U-NII-1-Ch 38 5190 MHz |	1	1	☒	☒	☐	**Pass**
4.14b	n Mode | 40 MHz | MCS4 | U-NII-2A-Ch 54 5270 MHz |	1	1	☒	☒	☐	**Pass**
4.15b	n Mode | 40 MHz | MCS4 | U-NII-2C-Ch 102 5510 MHz |	1	1	☒	☒	☐	**Pass**
4.16b	n Mode | 40 MHz | MCS4 | U-NII-3-Ch 151 5755 MHz |	1	1	☒	☒	☐	**Pass**
4.17b	ac Mode | 40 MHz | MCS0 | U-NII-1-Ch 46 5230MHz |	1	1	☒	☒	☐	**Pass**
4.18b	ac Mode | 40 MHz | MCS0 | U-NII-2A-Ch 62 5310 MHz |	1	1	☒	☒	☐	**Pass**
4.19b	ac Mode | 40 MHz | MCS0 | U-NII-2C-Ch 134 5670 MHz |	1	1	☒	☒	☐	**Pass**
4.20b	ac Mode | 40 MHz | MCS0 | U-NII-3-Ch 159 5795 MHz |	1	1	☒	☒	☐	**Pass**
4.21b	ac Mode | 80 MHz | MCS0 | U-NII-1-Ch 42 5210MHz |	1	1	☒	☒	☐	**Pass**
4.22b	ac Mode | 80 MHz | MCS0 | U-NII-2A-Ch 58 5290 MHz |	1	1	☒	☒	☐	**Pass**
4.23b	ac Mode | 80 MHz | MCS0 | U-NII-2C-Ch 106 5530 MHz |	1	1	☒	☒	☐	**Pass**
4.24b	ac Mode | 80 MHz | MCS0 | U-NII-3-Ch 155 5575 MHz |	1	1	☒	☒	☐	**Pass**

5.8.6. Radiated Field Strength Emissions – 18 GHz to 40 GHz Results

Radiated Field Strength Emissions – 18 GHz to 40 GHz							
Temperature :+21 °C	**Technology: WLAN 5 GHz 802.11a/n**			**TX-Fixed Channel (Modulated)**			
Diagram No. (Remark 1)	Test Settings Mode B.W. | Data Rate | Channel	Set-up no.	OP-mode no.	Used detector			Verdict
				PK	AV	QP	
4.01c	a Mode | 20 MHz | 6 Mbit | U-NII-1-Ch 36 5180 MHz |	1	1	☒	☒	☐	**Pass**
4.02c	a Mode | 20 MHz | 6 Mbit | U-NII-2A-Ch 64 5320 MHz |	1	1	☒	☒	☐	**Pass**
4.03c	a Mode | 20 MHz | 6 Mbit | U-NII-2C-Ch 100 5500 MHz |	1	1	☒	☒	☐	**Pass**
4.04c	a Mode | 20 MHz | 6 Mbit | U-NII-3-Ch 149 5745 MHz |	1	1	☒	☒	☐	**Pass**
4.05c	n Mode | 20 MHz | MCS3 | U-NII-1-Ch 40 5200 MHz |	1	1	☒	☒	☐	**Pass**
4.06c	n Mode | 20 MHz | MCS3 | U-NII-2A-Ch 52 5260 MHz |	1	1	☒	☒	☐	**Pass**
4.07c	n Mode | 20 MHz | MCS3 | U-NII-2C-Ch 116 5580 MHz |	1	1	☒	☒	☐	**Pass**
4.08c	n Mode | 20 MHz | MCS3 | U-NII-3-Ch 157 5785 MHz |	1	1	☒	☒	☐	**Pass**
4.09c	ac Mode | 20 MHz | MCS4 | U-NII-1-Ch 48 5240 MHz |	1	1	☒	☒	☐	**Pass**
4.10c	ac Mode | 20 MHz | MCS4 | U-NII-2A-Ch 56 5280 MHz |	1	1	☒	☒	☐	**Pass**
4.11c	ac Mode | 20 MHz | MCS4 | U-NII-2C-Ch 140 5700 MHz |	1	1	☒	☒	☐	**Pass**
4.12c	ac Mode | 20 MHz | MCS4 | U-NII-3-Ch 165 5825 MHz |	1	1	☒	☒	☐	**Pass**
4.13c	n Mode | 40 MHz | MCS4 | U-NII-1-Ch 38 5190 MHz |	1	1	☒	☒	☐	**Pass**
4.14c	n Mode | 40 MHz | MCS4 | U-NII-2A-Ch 54 5270 MHz |	1	1	☒	☒	☐	**Pass**
4.15c	n Mode | 40 MHz | MCS4 | U-NII-2C-Ch 102 5510 MHz |	1	1	☒	☒	☐	**Pass**
4.16c	n Mode | 40 MHz | MCS4 | U-NII-3-Ch 151 5755 MHz |	1	1	☒	☒	☐	**Pass**
4.17c	ac Mode | 40 MHz | MCS0 | U-NII-1-Ch 46 5230MHz |	1	1	☒	☒	☐	**Pass**
4.18c	ac Mode | 40 MHz | MCS0 | U-NII-2A-Ch 62 5310 MHz |	1	1	☒	☒	☐	**Pass**
4.19c	ac Mode | 40 MHz | MCS0 | U-NII-2C-Ch 134 5670 MHz |	1	1	☒	☒	☐	**Pass**
4.20c	ac Mode | 40 MHz | MCS0 | U-NII-3-Ch 159 5795 MHz |	1	1	☒	☒	☐	**Pass**
4.21c	ac Mode | 80 MHz | MCS0 | U-NII-1-Ch 42 5210MHz |	1	1	☒	☒	☐	**Pass**
4.22c	ac Mode | 80 MHz | MCS0 | U-NII-2A-Ch 58 5290 MHz |	1	1	☒	☒	☐	**Pass**
4.23c	ac Mode | 80 MHz | MCS0 | U-NII-2C-Ch 106 5530 MHz |	1	1	☒	☒	☐	**Pass**
4.24c	ac Mode | 80 MHz | MCS0 | U-NII-3-Ch 155 5575 MHz |	1	1	☒	☒	☐	**Pass**

5.9. RF-Parameter - Radiated Band-Edge compliance measurements

5.9.1. Test location and equipment FAR

test site	☐441 EMI SAR	☐348 EMI cond.	☒443 EMI FAR	☐347 Radio.lab.	☐337 OATS	☐
spectr. analys.	☐584 FSU	☐120 FSEM	☒264 FSEK	☒714 FSW67	☐	☐
antenna meas	☐574 BTA-L	☐289 CBL 6141	☐608 HL 562	☒549 HL025	☐302 BBHA9170	☐477 GPS
antenna meas	☐123 HUF-Z2	☐132 HUF-Z3	☐030 HFH-Z2	☐	☐	☐
antenna subst	☐071 HUF-Z2	☐020 EMCO3115	☐063 LP 3146	☐303 BBHA9170	☐	☐
multimeter	☐341 Fluke 112	☐	☐	☐	☐	☐
signaling	☐392 MT8820A	☐371 CBT32	☐547 CMU	☐594 CMW		
DC power	☐611 E3632A	☒087 EA3013	☐354 NGPE 40	☐349 car battery	☐350 Car battery	☐
Supply voltage	☐ 230 V 50 Hz via public mains		☒ 13.5 V DC			

5.9.2. Requirements/Limits

FCC	☐ Part 15 Subpart B, §15.109 class B ☒ Part 15 Subpart C, §15.209 for frequencies defined in §15.205 ☐ Part 15 Subpart C, §15.407(b)(1)(2)(3)(4)				
ISED	☒ RSS-Gen., Issue 4, Chapter 8.9, Table 5+7 (transmitter licence excempt) ☐ RSS-Gen., Issue 5, Chapter 7.3, Table 3 (receiver) ☐ ICES-003, Issue 6, Chapter 6.2.2, Table 7 (class B) ☐ RSS-247, Issue 2, Chapter 5.5 ☒ RSS-247, Issue 2, Chapter 6.2				
ANSI	☐ C63.4-2014 ☒ C63.10-2013				
Frequency [MHz]	Limits				
	AV [µV/m]	AV [dBµV/m]	Peak [µV/m]	Peak [dBµV/m] or [dBm/MHz]	
above 1 GHz for frequencies as defined in §15.205 or RSS-Gen., Issue 9, §8.9 - Table 5	500	54.0	5000	74.0 dBµV/m	
§15.407(b)(1)(2)(3)(4)	--	--	--	(b)(1): 5.15-5.25GHz: -27dBm eirp (b)(2): 5.25-5.35GHz: -27dBm eirp (b)(3): 5.47-5.725 GHz: -27dBm eirp (-17dBm/MHz eirp) (b)(4): 5725-5.85GHz: Spectrum mask	
RSS-247, Issue 2	--	--	--	§6.2.1.2 §6.2.2.2 §6.2.3.3	-27dBm/MHz (68.2 dBµV/m)
				§6.2.4.2:	Spectrum mask 27 to 15.6dBm 15.6dBm to 10dBm

5.9.3. Test condition and measurement test set-up

Signal link to test system (if used):		☐ air link	☐ cable connection	☒ none
EUT-grounding		☒ none	☐ with power supply	☐ additional connection
Equipment set up		☒ table top 1.5m height		☐ floor standing
Climatic conditions		Temperature: (22±3°C)		Rel. humidity: (40±20)%
Spectrum-Analyzer settings	Scan frequency range: Scan-Mode Detector RBW/VBW Mode: Scan step Sweep-Time	☐ 1 – 18 GHz ☐ 18 – 25 GHz ☐ 18 – 40 GHz ☒ other: see diagrams ☐ 6 dB EMI-Receiver Mode ☒ 3 dB Spectrum analyzer Mode Peak and Average Left band-edge: 100kHz/300kHz Right band-edge: 1 MHz / 3 MHz Repetitive-Scan, max-hold 40kHz or 400 kHz Coupled – calibrated display if CW signal otherwise adapted to EUT's individual duty-cycle		
General measurement procedures		Please see chapter "Test system set-up for radiated electric field measurements above 1 GHz" for general measurements procedures in anechoic chamber.		

5.9.4. Measurement Method

For uncritical results where a measurement resolution bandwidth of 1MHz can clearly show the compliance without influencing the results, a field strength measurement was performed to show compliance.

For critical results a Marker-Delta marker method was used for showing compliance to restricted bands. The method is according ANSI C63.10:2013, Chapter 6.10.6 “Marker-Delta method”

5.9.5. EUT settings

The EUT was instructed to send with maximum power (if adjustable) according to applicants instructions.

5.9.6. Results for FCC and ISED a Mode 20MHz

Tests have been performed conducted and results up-scaled to radiated values.

Results for non-restricted bands - limits according to FCC §15.407 /RSS-247, Issue 2
Results for restricted bands near-by - limits accord. FCC §15.205 / §15.209

Diagramm no.	Channel no.	Restricted band ?	Fundamental Value [dBuV/m]		Value at Band-Edge [dBuV/m]		Limits [dBuV/m]		Duty-Cycle Correction for AV-detector	Margin [dB]		Verdict	Remark:
			Peak-Value	Average-Value	Peak -Value	Average -Value	Peak -Value	Average -Value	[dB]	Peak	Average		
9.01a_laying	36	yes	104,61	96,73	52,89	43,17	74	54	0	21,11	10,83	PASS	a-mode, PWR-LVL=10dBm
9.01a_standing	36	yes	103,67	95,12	50,70	41,37	74	54	0	23,30	12,63	PASS	a-mode, PWR-LVL=10dBm
9.03a	100	yes	106,14	98,47	57,14	44,35	74	54	0	16,86	9,65	PASS	a-mode, PWR-LVL=10dBm
9.05a	36	yes	97,81	88,85	54,00	40,30	74	54	0	20,00	13,70	PASS	n20-mode, PWR-LVL=10dBm
9.07a	100	yes	103,25	90,19	54,07	42,90	74	54	0	19,93	11,10	PASS	n20-mode, PWR-LVL=10dBm
9.09a	36	yes	93,84	83,45	52,00	41,58	74	54	0	22,00	12,42	PASS	ac20-mode, PWR-LVL=6dBm
9.11a	100	yes	96,07	86,40	53,23	42,12	74	54	0	20,77	11,88	PASS	ac20-mode, PWR-LVL=6dBm
9.13a	38	yes	87,86	76,42	53,93	43,39	74	54	0	20,07	10,61	PASS	n40-mode, PWR-LVL=10dBm
9.15a	102	yes	92,70	80,51	58,16	48,23	74	54	0	15,84	5,77	PASS	n40-mode, PWR-LVL=10dBm
9.17a	38	yes	85,84	72,98	53,30	42,90	74	54	0	20,70	11,10	PASS	ac40-mode, PWR-LVL=6dBm
9.21a	42	yes	89,59	81,43	55,80	45,42	74	54	0	18,20	8,58	PASS	ac80-mode, PWR-LVL=6dBm
9.23a	106	yes	91,81	84,08	58,65	48,10	74	54	0	15,35	5,90	PASS	ac80-mode, PWR-LVL=6dBm

Diagramm no.	Channel no.	Restricted band ?	Fundamental Value		Value at Band-Edge		Limits		Duty-Cycle	Margin		Verdict	Remark:
			Peak-Value	Average-Value	Peak -Value	Average -Value	Peak -Value	Average -Value	[dB]	Peak	Average		
9.02b_laying	64	yes	106,30	97,84	54,85	44,88	74	54	0	19,15	9,12	PASS	a-mode, PWR-LVL=10dBm
9.02b_standing	64	yes	104,63	95,90	53,40	44,46	74	54	0	20,60	9,54	PASS	a-mode, PWR-LVL=10dBm
9.03b_laying	140	yes	104,08	96,01	55,72	45,35	74	54	0	18,28	8,65	PASS	a-mode, PWR-LVL=10dBm
9.03b_standing	140	yes	103,49	95,55	57,21	45,50	74	54	0	16,79	8,50	PASS	a-mode, PWR-LVL=10dBm
9.06b	64	yes	100,28	89,99	53,90	42,81	74	54	0	20,10	11,19	PASS	n20-mode, PWR-LVL=10dBm
9.07b	140	yes	98,57	88,59	54,60	44,20	74	54	0	19,40	9,80	PASS	n20-mode, PWR-LVL=10dBm
9.10b	64	yes	94,51	85,83	52,85	42,58	74	54	0	21,15	11,42	PASS	ac20-mode, PWR-LVL=6dBm
9.11b	140	yes	91,83	83,34	53,30	42,39	74	54	0	20,70	11,61	PASS	ac20-mode, PWR-LVL=6dBm
9.14b	62	yes	96,24	86,96	60,70	45,96	74	54	0	13,30	8,04	PASS	n40-mode, PWR-LVL=10dBm
9.18b	62	yes	90,58	81,92	53,50	42,72	74	54	0	20,50	11,28	PASS	ac40-mode, PWR-LVL=6dBm
9.19a	134	yes	89,00	80,00	52,74	42,90	74	54	0	21,26	11,10	PASS	ac40-mode, PWR-LVL=6dBm

Diagramm no.	Channel no.	Restricted band ?	Fundamental Value		UNII-3 Spectrum Mask		Remark:
			Peak-Value	Average-Value	Left -Value	Right -Value	
9.04a	149	no	105,09	96,79	PASS	PASS	a-mode, PWR-LVL=10dBm
9.04b_laying	165	no	107,97	99,58	PASS	PASS	a-mode, PWR-LVL=10dBm
9.04b_standing	165	no	106,67	99,30	PASS	PASS	a-mode, PWR-LVL=10dBm
9.08a	149	no	101,50	88,10	PASS	PASS	n20-mode, PWR-LVL=10dBm
9.08b	165	no	101,73	92,45	PASS	PASS	n20-mode, PWR-LVL=10dBm
9.12a	149	no	92,58	84,58	PASS	PASS	ac20-mode, PWR-LVL=6dBm
9.12b	165	no	97,85	88,99	PASS	PASS	ac20-mode, PWR-LVL=6dBm
9.16a	151	no	93,89	80,56	PASS	PASS	n40-mode, PWR-LVL=10dBm
9.16b	159	no	98,44	88,89	PASS	PASS	n40-mode, PWR-LVL=10dBm
9.20a	151	no	91,68	83,65	PASS	PASS	ac40-mode, PWR-LVL=6dBm
9.20b	159	no	92,70	85,32	PASS	PASS	ac40-mode, PWR-LVL=6dBm
9.24a	155	no	93,01	84,87	PASS	PASS	ac80-mode, PWR-LVL=6dBm

Remark : The EUT complies to the band edge requirement under provision that the power level is adjusted to those listed in the table above.

5.9.7. Results for restricted emissions in 5250-5350MHz band when TX operable in 5150-5250MHz band

Requirement Canada RSS-247, Issue 2, Chapter 6.2.1.2

See annex 1 for results

Diagram No.	Mode	Channel No.	Occupied Bandwidth [MHz]	Channel Power [dBm]	Max. Power within band 5250 to 5350MHz (measured approx. 1% of OBW) [dBm]	Attenuation in regards to CH PWR [dBc]	Limit [dBc]	Verdict
35.01a 35.01b 35.01c	a	48	16,82	6,72	-35,29	42,01	26	pass
35.02a 35.02b 35.03c	n20	48	17,73	7,17	-33,12	40,29	26	pass
35.03a 35.03b 35.03c	ac20	48	17,76	2,82	-36,83	39,65	26	pass
35.04a 35.04b 35.04c	n40	46	36,23	5,69	-34,66	40,35	26	pass
35.05a 35.05b 35.05c	ac40	46	36,21	2,37	-37,59	39,96	26	pass
35.06a 35.06b 35.06c	ac80	42	77,14	6,44	-25,29	31,73	26	pass

Verdict: Pass

5.9.8. Results for restricted emissions in 5150-5250MHz band when TX operable in 5250-5350MHz band

Requirement Canada RSS-247, Issue 2, Chapter 6.2.2.2 b

See annex 1 for results

Diagram No.	Mode	Channel No.	Peak EIRP [dBm]	Peak Value at band edge [dBm]	Max. power density at 5250MHz point on operable channel [dBm/MHz]	Limit [dBm/MHz]	Verdict
9.02a_step2	a	52	95,95	95,87	-0,08	10	pass
9.06a_step2	n20	52	78,90	61,10	-17,80	10	pass
9.10a_step2	ac20	52	74,14	52,96	-21,18	10	pass
9.14a_step2	n40	54	70,16	54,89	-15,26	10	pass
9.18a_step2	ac40	54	66,55	49,79	-16,76	10	pass
9.22a_step2	ac80	58	79,82	55,56	-24,25	10	pass

Verdict: Pass

5.10. Measurement uncertainties

The reported uncertainties are calculated based on the standard uncertainty multiplied with the appropriate coverage factor **k**, such that a confidence level of approximately 95% is achieved.
For uncertainty determination, each component used in the concrete measurement set-up was taken in account and it's contribution to the overall uncertainty according it's statistical distribution calculated.

Following table shows expectable uncertainties for each measurement type performed.

RF-Measurement	Reference	Frequency range	Calculated uncertainty based on a confidence level of 95%						Remarks
Conducted emissions (U_{CISPR})	CISPR 16-2-1	9 kHz - 150 kHz 150 kHz - 30 MHz	4.0 dB 3.6 dB						-
Radiated emissions Enclosure	CISPR 16-2-3	30 MHz - 1 GHz 1 GHz - 18 GHz	4.2 dB 5.1 dB						E-Field
Disturbance power	CISPR 16-2-2	30 MHz - 300 MHz	-						-
Power Output radiated	-	30 MHz - 4 GHz	3.17 dB						Substitution method
Power Output conducted	-	Set-up No.	Cel-C1	Cel-C2	BT1	W1	W2	--	
		9 kHz - 12.75 GHz	N/A	0.60	0.7	0.25	N/A	--	-
		12.75 - 26.5GHz	N/A	0.82	--	N/A	N/A	--	
Conducted emissions on RF-port	-	9 kHz - 2.8 GHz	0.70	N/A	0.70	N/A	0.69	--	N/A - not applicable
		2.8 GHz - 12.75GHz	1.48	N/A	1.51	N/A	1.43	--	
		12.75 GHz - 18GHz	1.81	N/A	1.83	N/A	1.77	--	
		18 GHz - 26.5GHz	1.83	N/A	1.85	N/A	1.79	--	
Occupied bandwidth	-	9 kHz - 4 GHz	0.1272 ppm (Delta Marker)						Frequency error
			1.0 dB						Power
Emission bandwidth	- -	9 kHz - 4 GHz	0.1272 ppm (Delta Marker)						Frequency error
			See above: 0.70 dB						Power
Frequency stability	-	9 kHz - 20 GHz	0.0636 ppm						-
Radiated emissions Enclosure	-	150 kHz - 30 MHz 30 MHz - 1 GHz 1 GHz - 20 GHz	5.0 dB 4.2 dB 3.17 dB						Magnetic field E-field Substitution

Table: measurement uncertainties, valid for conducted/radiated measurements

6. Abbreviations used in this report

The abbreviations	
ANSI	American National Standards Institute
AV . AVG. CAV	Average detector
EIRP	Equivalent isotropically radiated power. determined within a separate measurement
EGPRS	Enhanced General Packet Radio Service
EUT	Equipment Under Test
FCC	Federal Communications Commission. USA
IC	Industry Canada
n.a.	not applicable
Op-Mode	Operating mode of the equipment
PK	Peak
RBW	resolution bandwidth
RF	Radio frequency
RSS	Radio Standards Specification. Documents from Industry Canada
Rx	Receiver
TCH	Traffic channel
Tx	Transmitter
QP	Quasi peak detector
VBW	Video bandwidth
ERP	Effective radiated power

7. Accreditation details of CETECOM's laboratories and test sites

Ref.-No.	Accreditation Certificate	Valid for laboratory area or test site	Accreditation Body
-	D-PL-12047-01-01	All laboratories and test sites of CETECOM GmbH. Essen	DAkkS. Deutsche Akkreditierungsstelle GmbH
337 487 558 348 348	(MRA US-EU 0003)	Radiated Measurements 30 MHz to 1 GHz. 3 m / 10 m (OATS) Radiated Measurements 30 MHz to 1 GHz. 3 m (SAR) Radiated Measurements above 1 GHz. 3 m (FAR) Mains Ports Conducted Interference Measurements Telecommunication Ports Conducted Interference Measurem.	FCC. Federal Communications Commission Laboratory Division. USA
337 487 550 558	3462D-1 3462D-2 3462D-2 3462D-3	Radiated Measurements 30 MHz to 1 GHz. 3 m / 10 m (OATS) Radiated Measurements 30 MHz to 1 GHz. 3 m (SAR) Radiated Measurements 1 GHz to 6 GHz. 3 m (SAR) Radiated Measurements above 1 GHz. 3 m (FAR)	ISED. Industry Canada Certification and Engineering Bureau
487 550 348 348	R-2666 G-301 C-2914 T-1967	Radiated Measurements 30 MHz to 1 GHz. 3 m (SAR) Radiated Measurements 1 GHz to 6 GHz. 3 m (SAR) Mains Ports Conducted Interference Measurements Telecommunication Ports Conducted Interference Measurem.	VCCI. Voluntary Control Council for Interference by Information Technology Equipment. Japan
OATS = Open Area Test Site. SAR = Semi Anechoic Room. FAR = Fully Anechoic Room			

8. Instruments and Ancillary

The “Ref.-No” in the left column of the following tables allows the clear identification of the laboratory equipment.

8.1. Test software and firmware of equipment

Ref.-No.	Equipment	Type	Serial-No.	Version of Firmware or Software during the test
001	EMI Test Receiver	ESS	825132/017	Firm.= 1.21 , OTP=2.0, GRA=2.0
012	Signal Generator (EMS-cond.)	SMY 01	839069/027	Firm.= V 2.02
013	Power Meter (EMS cond.)	NRVD	839111/003	Firm.= V 1.51
017	Digital Radiocommunication Tester	CMD 60 M	844365/014	Firmware = V 3.52 .22.01.99, DECT = D2.87 13.01.99
119	RT Harmonics Analyzer dig. Flickermeter	B10	G60547	Firm.= V 3.1DHG
261	Thermal Power Sensor	NRV-Z55	825083/0008	EPROM-Datum 02.12.04, SE EE 1 B
262	Power Meter	NRV-S	825770/0010	Firm.= 2.6
263	Signal Generator	SMP 04	826190/0007	Firm.=3.21
295	Racal Digital Radio Test Set	6103	1572	UNIT Firmware= 4.04, SW-Main=4.04, SW-BBP=1.04, SW-DSP=1.02, Hardboot=1.02, Softboot=2.02
298	Univ. Radio Communication Tester	CMU 200	832221/091	R&S Test Firmware =3.53 /3.54 (current Testsoftw. f. all band used
323	Digital Radiocommunication Tester	CMD 55	825878/0034	Firm.= 3.52 .22.01.99
335	CTC-EMS-Conducted	System EMS Conducted	-	EMC 32 V 8.52
340	Digital Radiocommunication Tester	CMD 55	849709/037	Firm.= 3.52 .22.01.99
366	Ultra Compact Simulator	UCS 500 M4	V0531100594	Firm. UCS 500=001925/3.06a02, rc=ISMIEC 4.10
371	Bluetooth Tester	CBT32	100153	CBT V5,30+ SW-Option K55, K57
377	EMI Test Receiver	ESCS 30	100160	Firm.= 2.30, OTP= 02.01, GRA= 02.36
378	Broadband RF Field Monitor	RadiSense III	03D00013SNO-08	Firm.= V.03D13
389	Digital Multimeter	Keithley 2000	0583926	Firm. = A13 (Mainboard) A02 (Display)
392	Radio Communication Tester	MT8820A	6K00000788	Firm.= 4.50 #005, IPL=4.01#001,OS=4.02#001, GSM=4.41#013, W-CDMA= 4.54#004, scenario= 4.52#002
436	Univ. Radio Communication Tester	CMU 200	103083	R&S Test Firmware Base=5.14, Mess-Software= GSM:5.14 WCDMA:5.14 (current Testsoftw. F. all band
441	CTC-SAR-EMI Cable Loss	System EMI field (SAR)	-	EMC 32 Version 8.52
442	CTC-SAR-EMS	System EMS field (SAR)	-	EMC 32 Version 8.40
443	CTC-FAR-EMI-RSE	System CTC-FAR-EMI-RSE	-	Spuri 7.2.5 or EMC 32 Ver. 9.15.00
444	CTC-FAR-EMS field	System-EMS-Field (FAR)	-	EMC 32 Version 9.15.00
460	Univ. Radio Communication Tester	CMU 200	108901	R&S Test Firmware Base=5.14, GSM=5.14 WCDMA=5.14 (current Testsoftw.,f. all band to be used,
489	EMI Test Receiver	ESU40	1000-30	Firmware=4.43 SP3, Bios=V5.1-16-3, Spec. =01.00
491	ESD Simulator dito	ESD dito	dito307022	V 2.30
524	Voltage Drop Simulator	VDS 200	0196-16	Software Nr: 000037 Version V4.20a01
526	Burst Generator	EFT 200 A	0496-06	Software Nr. 000034 Version V2.32
527	Micro Pulse Generator	MPG 200 B	0496-05	Software-Nr. 000030 Version V2.43
528	Load Dump Simulator	LD 200B	0496-06	Software-Nr. 000031 Version V2.35a01
546	Univ. Radio Communication Tester	CMU 200	106436	R&S Test Firmware Base=5.14, GSM=5.14 WCDMA=5.14 (current Testsoftw.,f. all band to be used
547	Univ. Radio Communication Tester	CMU 200	835390/014	R&S Test Firmware Base=V5.1403 (current Testsoftw., f. all band used, GSM = 5.14 WCDMA: = 5.14
584	Spectrum Analyzer	FSU 8	100248	2.82_SP3
597	Univ. Radio Communication Tester	CMU 200	100347	R&S Test Firmware Base=5.01, GSM=5.02 WCDMA= not installed, Mainboard= µP1=V.850
607	Signal Generator	SMR 20	832033/011	V1.25
620	EMI Test Receiver	ESU 26	100362	4.43_SP3
642	Wideband Radio Communication Tester	CMW 500	126089	Setup V03.26, Test programm component V03.02.20
670	Univ. Radio Communication Tester	CMU 200	106833	µP1 =V8.50, Firmware = V.20
689	Vector Signal Generator	SMU200	100970	02.20.360.142
692	Bluetooth Tester	CBT 32	100236	CBT V 5.40, FW: V.2.41 (FPGA Digital, V. 3.09 FPGA RF)

8.2. Single instruments and test systems

Ref.-No.	Equipment	Type	Serial-No.	Manufacturer	Interval of calibration	Remark	Cal due
001	EMI Test Receiver	ESS	825132/017	Rohde & Schwarz	12 M	-	16.05.2019
005	AC - LISN (50 Ohm/50µH, test site 1)	ESH2-Z5	861741/005	Rohde & Schwarz	12 M	-	16.05.2019
007	Single-Line V-Network (50 Ohm/5µH)	ESH3-Z6	892563/002	Rohde & Schwarz	12 M	-	16.05.2019
009	Power Meter (EMS-radiated)	NRV	863056/017	Rohde & Schwarz	24 M	-	15.05.2019
016	Line Impedance Simulating Network	Op. 24-D	B6366	Spitzenberger+Spies	36 M	-	30.05.2019
021	Loop Antenna (H-Field)	6502	9206-2770	EMCO	36 M	-	30.05.2019
030	Loop Antenna (H-field)	HFH-Z2	879604/026	Rohde & Schwarz	36 M	-	30.05.2019
033	RF-current probe (100kHz-30MHz)	ESH2-Z1	879581/18	Rohde & Schwarz	24 M	-	15.05.2019
057	relay-switch-unit (EMS system)	RSU	494440/002	Rohde & Schwarz	pre-m	1a	
060	power amplifier (DC-2kHz)	PAS 5000	B6363	Spitzenberger+Spies	-	3	
086	DC - power supply, 0 -10 A	LNG 50-10	-	Heinzinger Electronic	pre-m	2	
087	DC - power supply, 0 -5 A	EA-3013 S	-	Elektro Automatik	pre-m	2	
091	USB-LWL-Converter	OLS-1	007/2006	Ing. Büro Scheiba	-	4	
099	passive voltage probe	ESH2-Z3	299.7810.52	Rohde & Schwarz	36 M	-	30.05.2021
100	passive voltage probe	Probe TK 9416	without	Schwarzbeck	36 M	-	30.05.2021
110	USB-LWL-Converter	OLS-1	-	Ing. Büro Scheiba	-	4	
119	RT Harmonics Analyzer dig. Flickermeter	B10	G60547	BOCONSULT	36 M	-	30.05.2019
133	horn antenna 18 GHz (Meas 1)	3115	9012-3629	EMCO	36 M	1c	10.03.2020
134	horn antenna 18 GHz (Subst 2)	3115	9005-3414	EMCO	36 M	-	10.03.2020
136	adjustable dipole antenna (Dipole 1)	3121C-DB4	9105-0697	EMCO	36 M	-	30.04.2018
248	attenuator	SMA 6dB 2W	-	Radiall	pre-m	2	
249	attenuator	SMA 10dB 10W	-	Radiall	pre-m	2	
252	attenuator	N 6dB 12W	-	Radiall	pre-m	2	
256	attenuator	SMA 3dB 2W	-	Radiall	pre-m	2	
257	hybrid	4031C	04491	Narda	pre-m	2	
260	hybrid coupler	4032C	11342	Narda	pre-m	2	
261	Thermal Power Sensor	NRV-Z55	825083/0008	Rohde & Schwarz	24 M	-	30.05.2020
262	Power Meter	NRV-S	825770/0010	Rohde & Schwarz	24 M	-	30.05.2019
263	Signal Generator	SMP 04	826190/0007	Rohde & Schwarz	36 M	-	30.05.2019
265	peak power sensor	NRV-Z33, Model 04	840414/009	Rohde & Schwarz	24 M	-	30.05.2020
266	Peak Power Sensor	NRV-Z31, Model 04	843383/016	Rohde & Schwarz	24 M	-	30.05.2020
267	notch filter GSM 850	WRCA 800/960-6EEK	9	Wainwright GmbH	pre-m	2	
270	termination	1418 N	BB6935	Weinschel	pre-m	2	
271	termination	1418 N	BE6384	Weinschel	pre-m	2	
272	attenuator (20 dB) 50 W	Model 47	BF6239	Weinschel	pre-m	2	
273	attenuator (10 dB) 100 W	Model 48	BF9229	Weinschel	pre-m	2	
274	attenuator (10 dB) 50 W	Model 47 (10 dB) 50 W	BG0321	Weinschel	pre-m	2	
275	DC-Block	Model 7003 (N)	C5129	Weinschel	pre-m	2	
276	DC-Block	Model 7006 (SMA)	C7061	Weinschel	pre-m	2	
279	power divider	1515 (SMA)	LH855	Weinschel	pre-m	2	
298	Univ. Radio Communication Tester	CMU 200	832221/091	Rohde & Schwarz	pre-m	3	
300	AC LISN (50 Ohm/50µH, 1-phase)	ESH3-Z5	892 239/020	Rohde & Schwarz	12 M	-	17.05.2019
301	attenuator (20 dB) 50W, 18GHz	47-20-33	AW0272	Lucas Weinschel	pre-m	2	
302	horn antenna 40 GHz (Meas 1)	BBHA9170	155	Schwarzbeck	36 M	-	14.03.2020
303	horn antenna 40 GHz (Subst 1)	BBHA9170	156	Schwarzbeck	36 M	-	20.03.2020
331	Climatic Test Chamber -40/+180 Grad	HC 4055	43146	Heraeus Vötsch	24 M	-	30.10.2018
341	Digital Multimeter	Fluke 112	81650455	Fluke	24 M	-	30.05.2020
342	Digital Multimeter	Voltcraft M-4660A	IB 255466	Voltcraft	24 M	-	17.05.2019
347	laboratory site	radio lab.	-	-	-	5	
348	laboratory site	EMI conducted	-	-	-	5	
354	DC - Power Supply 40A	NGPE 40/40	448	Rohde & Schwarz	pre-m	2	
357	power sensor	NRV-Z1	861761/002	Rohde & Schwarz	24 M	-	24.05.2019
371	Bluetooth Tester	CBT32	100153	R&S	36 M	-	30.05.2019
373	Single-Line V-Network (50 Ohm/5µH)	ESH3-Z6	100535	Rohde & Schwarz	12 M	-	17.05.2019
377	EMI Test Receiver	ESCS 30	100160	Rohde & Schwarz	12 M	-	30.05.2019
389	Digital Multimeter	Keithley 2000	0583926	Keithley	pre-m	-	
405	Thermo-/Hygrometer	OPUS 10 THI	126.0604.0003.3.3.3.2 2	LUFFT Mess u. Regeltechnik	24 M	-	30.03.2019
431	Model 7405	Near-Field Probe Set	9305-2457	EMCO	-	4	
436	Univ. Radio Communication Tester	CMU 200	103083	Rohde & Schwarz	12 M	-	06.03.2019
439	UltraLog-Antenna	HL 562	100248	Rohde & Schwarz	36 M	-	10.03.2020
454	Oscilloscope	HM 205-3	9210 P 29661	Hameg	-	4	
456	DC-Power supply 0-5 A	EA 3013 S	207810	Elektro Automatik	pre-m	2	
459	DC -Power supply 0-5 A , 0-32 V	EA-PS 2032-50	910722	Elektro Automatik	pre-m	2	
460	Univ. Radio Communication Tester	CMU 200	108901	Rohde & Schwarz	12 M	-	30.05.2019
463	Universal source	HP3245A	2831A03472	Agilent	-	4	
466	Digital Multimeter	Fluke 112	89210157	Fluke USA	24 M	-	30.05.2020
467	Digital Multimeter	Fluke 112	89680306	Fluke USA	36 M	-	30.05.2019

Ref.-No.	Equipment	Type	Serial-No.	Manufacturer	Interval of calibration	Remark	Cal due
468	Digital Multimeter	Fluke 112	90090455	Fluke USA	36 M	-	30.04.2021
477	ReRadiating GPS-System	AS-47	-	Automotive Cons. Fink	-	3	
480	power meter (Fula)	NRVS	838392/031	Rohde & Schwarz	24 M	-	16.05.2019
482	filter matrix	Filter matrix SAR 1	-	CETECOM (Brl)	-	1d	
487	System CTC NSA-Verification SAR-EMI	System EMI field (SAR) NSA	-	ETS Lindgren / CETECOM	24 M	-	31.03.2019
502	band reject filter	WRCG 1709/1786-1699/1796-	SN 9	Wainwright	pre-m	2	
503	band reject filter	WRCG 824/849-814/859-	SN 5	Wainwright	pre-m	2	
517	relais switch matrix	HF Relais Box Keithley	SE 04	Keithley	pre-m	2	
523	Digital Multimeter	L4411A	MY46000154	Agilent	24 M	-	18.05.2019
529	6 dB Broadband resistive power divider	Model 1515	LH 855	Weinschel	pre-m	2	
530	10 dB Broadband resistive power divider	R 416110000	LOT 9828	-	pre-m	2	
546	Univ. Radio Communication Tester	CMU 200	106436	R&S	12 M	-	30.03.2018
547	Univ. Radio Communication Tester	CMU 200	835390/014	Rohde & Schwarz	12 M	-	05.07.2018
549	Log.Per-Antenna	HL025	1000060	Rohde & Schwarz	36/12 M	-	31.07.2018
550	System CTC S-VSWR Verification SAR-EMI	System EMI Field SAR S-VSWR	-	ETS Lindgren/CETECOM	24 M	-	30.03.2019
558	System CTC FAR S-VSWR	System CTC FAR S-VSWR	-	CTC	24 M	-	08.08.2019
574	Biconilog Hybrid Antenna	BTA-L	980026L	Frankonia	36/12 M	-	31.03.2019
584	Spectrum Analyzer	FSU 8	100248	Rohde & Schwarz	pre-m	-	
594	Wideband Radio Communication Tester	CMW 500	101757	Rohde & Schwarz	12 M	-	30.05.2019
597	Univ. Radio Communication Tester	CMU 200	100347	Rohde & Schwarz	pre-m	-	
600	power meter	NRVD (Reserve)	834501/018	Rohde & Schwarz	24 M	-	17.05.2019
601	medium-sensitivity diode sensor	NRV-Z5 (Reserve)	8435323/003	Rohde & Schwarz	24 M	-	15.05.2019
602	peak power sensor	NRV-Z32 (Reserve)	835080	Rohde & Schwarz	24 M	-	
611	DC power supply	E3632A	KR 75305854	Agilent	pre-m	2	
612	DC power supply	E3632A	MY 40001321	Agilent	pre-m	2	
613	Attenuator	R416120000 20dB 10W	Lot. 9828	Radiall	pre-m	2	
616	Digitalmultimeter	Fluke 177	88900339	Fluke	24 M	-	30.05.2020
617	Power Splitter/Combiner	ZFSC-2-2-S+	S F987001108	Mini Circuits	-	2	
618	Power Splitter/Combiner	50PD-634	600994	JFW Industries USA	-	2	
619	Power Splitter/Combiner	50PD-634	600995	JFW Industries, USA	-	3	
620	EMI Test Receiver	ESU 26	100362	Rohde-Schwarz	12 M	-	30.05.2019
621	Step Attenuator 0-139 dB	RSP	100017	Rohde & Schwarz	pre-m	2	
625	Generic Test Load USB	Generic Test Load USB	-	CETECOM	-	2	
627	data logger	OPUS 1	201.0999.9302.6.4.1.4 3	G. Lufft GmbH	24 M	-	30.03.2019
634	Spectrum Analyzer	FSM (HF-Unit)	826188/010	Rohde & Schwarz	pre-m	2	
637	High Speed HDMI with Ethernet 1m	HDMI cable with Ethernet 1m	-	KogiLink	-	2	
638	HDMI Kabel with Ethernet 1,5 m flach	HDMI cable with Ethernet	-	Reichelt	-	2	
640	HDMI cable 2m rund	HDMI cable 2m rund	-	Reichelt	-	2	
641	HDMI cable with Ethernet	Certified HDMI cable with	-	PureLink	-	2	
642	Wideband Radio Communication Tester	CMW 500	126089	Rohde&Schwarz	24 M	-	24.05.2019
644	Amplifierer	ZX60-2534M+	SN865701299	Mini-Circuits	-	-	
670	Univ. Radio Communication Tester	CMU 200	106833	Rohde & Schwarz	24 M	-	30.05.2020
671	DC-power supply 0-5 A	EA-3013S	-	Elektro Automatik	pre-m	2	
678	Power Meter	NRP	101638	Rohde&Schwarz	pre-m	-	
683	Spectrum Analyzer	FSU 26	200571	Rohde & Schwarz	12 M	-	30.05.2019
686	Field Analyzer	EHP-200A	160WX30702	Narda Safety Test Solutions	24 M	-	29.03.2019
687	Signal Generator	SMF 100A	102073	Rohde&Schwarz	12 M	-	30.05.2019
688	Pre Amp	JS-18004000-40-8P	1750117	Miteq	pre-m	-	
690	Spectrum Analyzer	FSU	100302/026	Rohde&Schwarz	24 M	-	16.05.2019
691	OSP120 Base Unit	OSP120	106833	Rohde & Schwarz	12 M	-	30.05.2019
692	Bluetooth Tester	CBT 32	100236	Rohde & Schwarz	36 M	-	29.05.2020
697	Power Splitter	ZN4PD-642W-S+	165001445	Mini-Circuits	-	2	
703	INNCO Antennen Mast	MA 4010-KT080-XPET-ZSS3	MA4170-KT100-XPET-	INNCO	pre-m	-	
704	INNCON Controller	CO 3000-4port	CO3000/933/3841051 6/L	INNCO Systems GmBh	pre-m	-	
711	Harmonic Mixer 90 GHz - 140GHz	RPG FS-Z140	101004	RPG	24 M	-	22.02.2019
712	Harmonic Mixer 75 GHz - 110GHz	FS-Z110	101468	Rohde & Schwarz	24 M	-	22.02.2019
713	Harmonic Mixer, 50 GHz - 75GHz	FS-Z75	101022	Rohde & Schwarz	24 M	-	22.05.2019
714	Signal Analyzer 67GHz	FSW67	104023	Rohde & Schwarz	24 M	-	28.02.2020
715	Harmonic Mixer, 140 GHz - 220GHz	FS-Z220	101009	RPG Radiometer Physics	24 M	-	03.08.2019
716	Harmonic Mixer 220 GHz to 325 GHZ	FS-Z325	101005	RPG Radiometer Physics	24 M	-	13.02.2019
747	Spectrum Analyzer	FSU 26	200152	Rohde & Schwarz	12 M	-	30.05.2019
748	Pickett-Potter Horn Antenna	FH-PP 4060	010001	Radiometer Physiscs	-	-	
749	Pickett-potter Horn Antenna	FH-PP 60-90	010003	Radiometer Physics	-	-	

Ref.-No.	Equipment	Type	Serial-No.	Manufacturer	Interval of calibration	Remark	Cal due
750	Pickett-Potter Horn Antenna	FH-PP 140-220	010011	Radiometer Physics	-	-	
751	Digital Optical System	optoCAN-FD Transceiver	17-010416	mk-messtechnik GmbH	-	-	
752	Digital Optical System	optoCAN-FD Transceiver	17-010083	mk-messtechnik GmbH	-	-	
753	Digital Optical System	optoCAN-FD Transceiver	17-010084	mk-messtechnik GmbH	-	-	
754	Digital Optical System	optoCAN-FD Transceiver	17-010415	mk-messtechnik GmbH	-	-	
755	Digital Optical System	optoLAN-100-MAX	17-010795	mk-messtechnik GmbH	-	-	
757	WIDEBAND RADIO COMMUNICATION	CMW500	163673	Rohde&Schwarz	12 M	-	20.07.2018
758	Signal Generator	SMU 200A	100754	Rohde & Schwarz	24 M	-	11.10.2019
780	Spectrum Analyzer	FSH3	101726	Rohde & Schwarz	12 M	-	19.07.2018
781	Power Supply	PS 2042-10 B	2815450369	Elektro-Automatik GmbH	-	-	
782	Power Supply	PS 2042-10 B	2815450348	lektro-Automatik GmbH &Co.KG	-	-	
783	Spectrum Analyzer	FSU 26	100414	Rohde & Schwarz	12 M	-	30.05.2019
784	Power Supply	NGSM 32/10	00196	Rohde & Schwarz	12 M	-	
785	RSP	RF Step Attenuator	860712/012	Rohde & Schwarz	12 M	-	
786	SAR Probe	ES3DV3	3340	Speag	36 M	-	14.02.2021
787	OSP	OSP B157WX	101264	Rohde & Schwarz	12 M	-	30.05.2019

8.3. Legend

Note / remarks		**Calibrated during system calibration:**
	1a	System CTC-SAR-EMS (Ref.-No. 442)
	1b	System-CTC-EMS-Conducted (Ref.-No. 335)
	1c	System CTC-FAR-EMI-RSE (Ref.-No . 443)
	1d	System CTC-SAR-EMI (Ref.-No . 441)
	1e	System CTC-OATS (EMI radiated) (Ref.-No. 337)
	1 f	System CTC-CTIA-OTA (Ref.-No . 420)
	1 g	System CTC-FAR-EMS (Ref.-No . 444)
	2	Calibration or equipment check immediately before measurement
	3	Regulatory maintained equipment for functional check or support purpose
	4	Ancillary equipment without calibration e.g. mechanical equipment or monitoring equipment
	5	Test System

Interval of calibration	12 M	12 month
	24 M	24 month
	36 M	36 month
	24/12 M	Calibration every 24 months, between this every 12 months internal validation
	36/12 M	Calibration every 36 months, between this every 12 months internal validation
	Pre-m	Check before starting the measurement
	-	Without calibration

9. Versions of test reports (change history)

Version	Applied changes	Date of release
--	Inital release	2018-12-05
C1	Labtool version and date added	2018-12-12
--	--	--

END OF TEST REPORT