ESPRESSObin Ultra- Quick Start Guide

Revision History

Date	Revision	Board Rev	Description
Oct 21, 2019	R1	V0-0-0	

A. Appearance

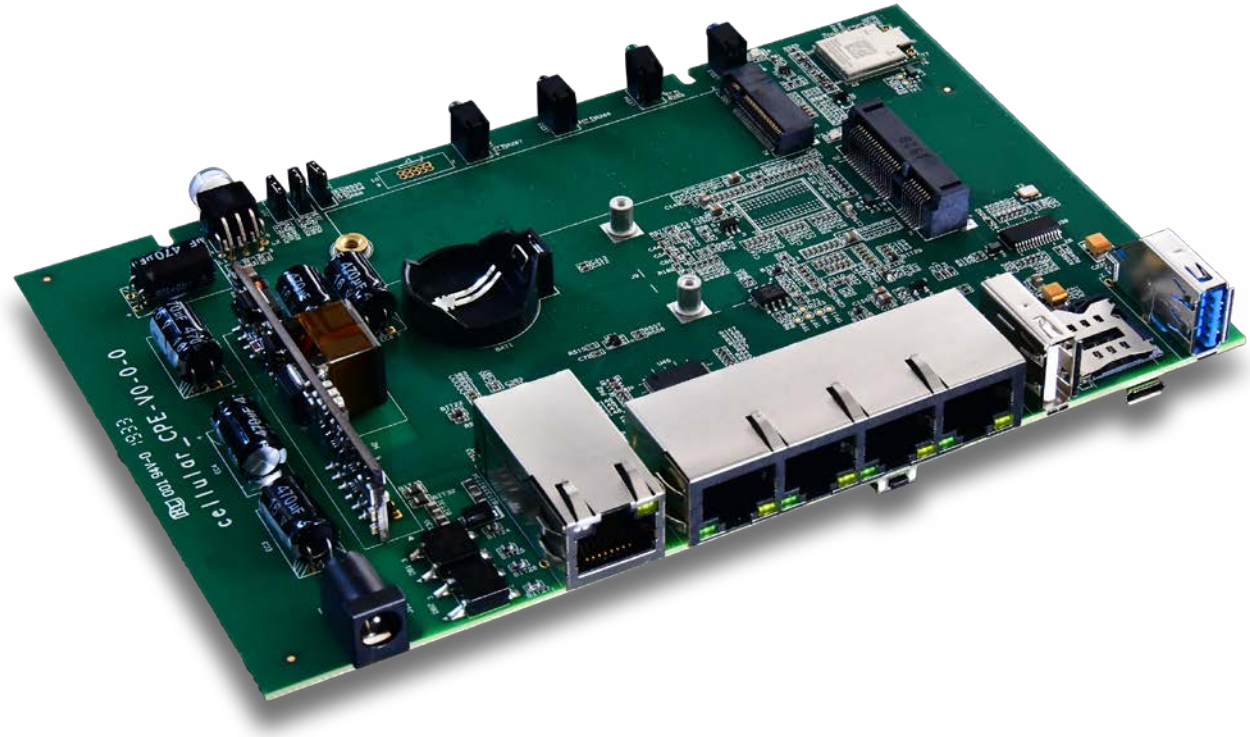

B. Package contents

	Content List		Remark
1	ESPRESSObin Ultra bare PCBA	1 unit	PCBA without enclosure
2	AC to DC 12V Power Adapter (optional)	1 pc	Input 90-240VAC / output 12V,2A DC (optional)
3	USB to Micro-USB Cable (optional)	1 pc	For debug console use
4	Warranty card	1 pc	

C. Key Features

SoC	• Marvell ARMADA 3720 • Dual Core ARMv8 Cortex-A53 • CPU frequency @1200MHz
Memory	• 1 GB / 2GB DDR4 -16bit
Storage	• 4MB SPI NOR flash • 8GB eMMC flash • SATA SSD socket -M.2-2280
Ethernet	• 1x Gb RJ45 WAN with POE input • 4x GB RJ45 LAN
Wireless	• 802.11 a/b/g/n + ac/ 2T2R WiFi with mini-PCIe interface
USB	• 1x USB 3.0 type A • 1x USB 2.0 type A • 1x micro USB UART port for debug console
Expansion	• • 1x M.2-2280 SSD socket •
Debugging	• 1x JTAG Cortex port, 10-pin • 1x micro USB UART connector
Miscellaneous	• DC 12V power Jack • Genuine POE power input through WAN port • 4x Software controlled LEDs • Power on/off button with LED indication • Reset button

D. Locations of All I/O Connectors and Major Parts

1. Top Side

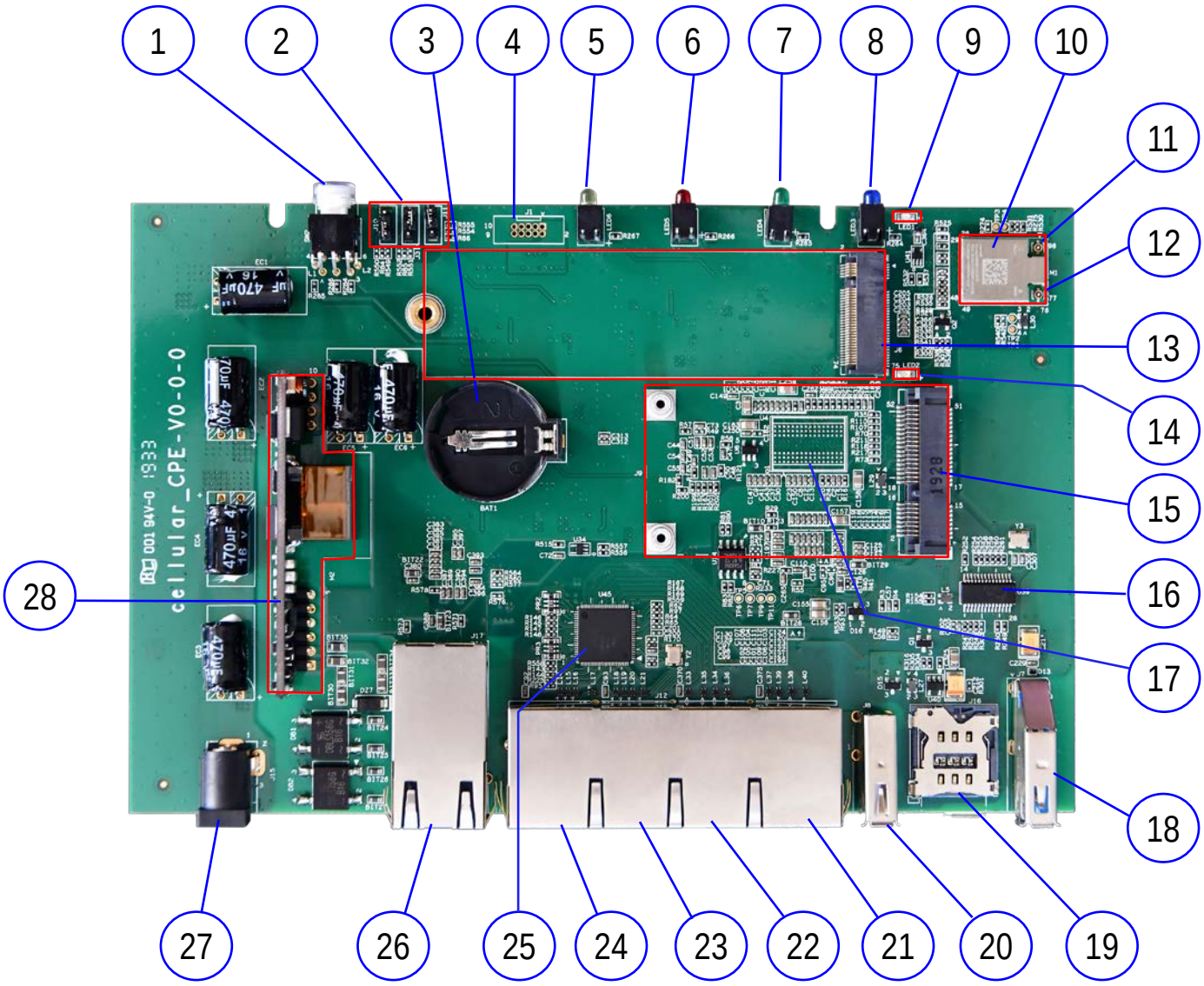

2. Top Side connectors and parts

No.	Part location	Description 1	Description 2
1	SW2	Power Switch	With LED indication
2	J11/ J3/ J10	MPP1_7/MPP1_6/MPP1_5	Boot Mode selection *see section F-1
3	BAT1	CR2032 /3V battery	Power for Real Time Clock
4	J1	JTAG Debugger (not populated)	5x2 pins, *see section E-1
5	LED6	Yellow color	MPP1_14 Software-driven (3.3V)
6	LED5	Red color	MPP1_13 Software-driven (3.3V)
7	LED4	Green color	MPP1_12 Software-driven (3.3V)
8	LED3	Blue color	MPP1_11 Software-driven (3.3V)
9	LED1	Green color	M.2 SSD LED (3.3V) connected to J6
10	M1	WiFi module 8.2.11/a/b/g/n/ac 2T2R WIFI	PCIe M.2 type 1216
11	M1 Antenna	WiFi Ant_B	U.FL Micro coaxial connector 2.0mmx 2.0mm
12	M1 Antenna	WiFi Ant_A	U.FL Micro coaxial connector 2.0mmx 2.0mm
13	J6	SATA SSD connector	M.2-22mmx 80mm
14	LED2	Green color	USIM LED (3.3V) connected to J9
15	U39	USB2.0/ 4-port HUB	
16	U4	SDRAM Rank2	16bit DDR4
18	J7	USB3.0 type A	
18	J8	USB2.0 type A	Downstream from U39 USB HUB
19	J12-D	RJ45	1Gb RJ45-LAN#4
20	J12-C	RJ45	1Gb RJ45-LAN#3
21	J12-B	RJ45	1Gb RJ45-LAN#2
22	J12-A	RJ45	1Gb RJ45-LAN#1
23	U45	Gb ethernet switch	6-port switch to J12-A/B/C/D and J17
24	J17	RJ45 with POE	1Gb RJ45 for WAN / POE power IN
25	J15	DC jack for 12VDC in	Center positive 2.1mm diameter
26	M2	POE module	DC12V/30W output, 802.3at/ 802.3af compliant

3. Bottom Side

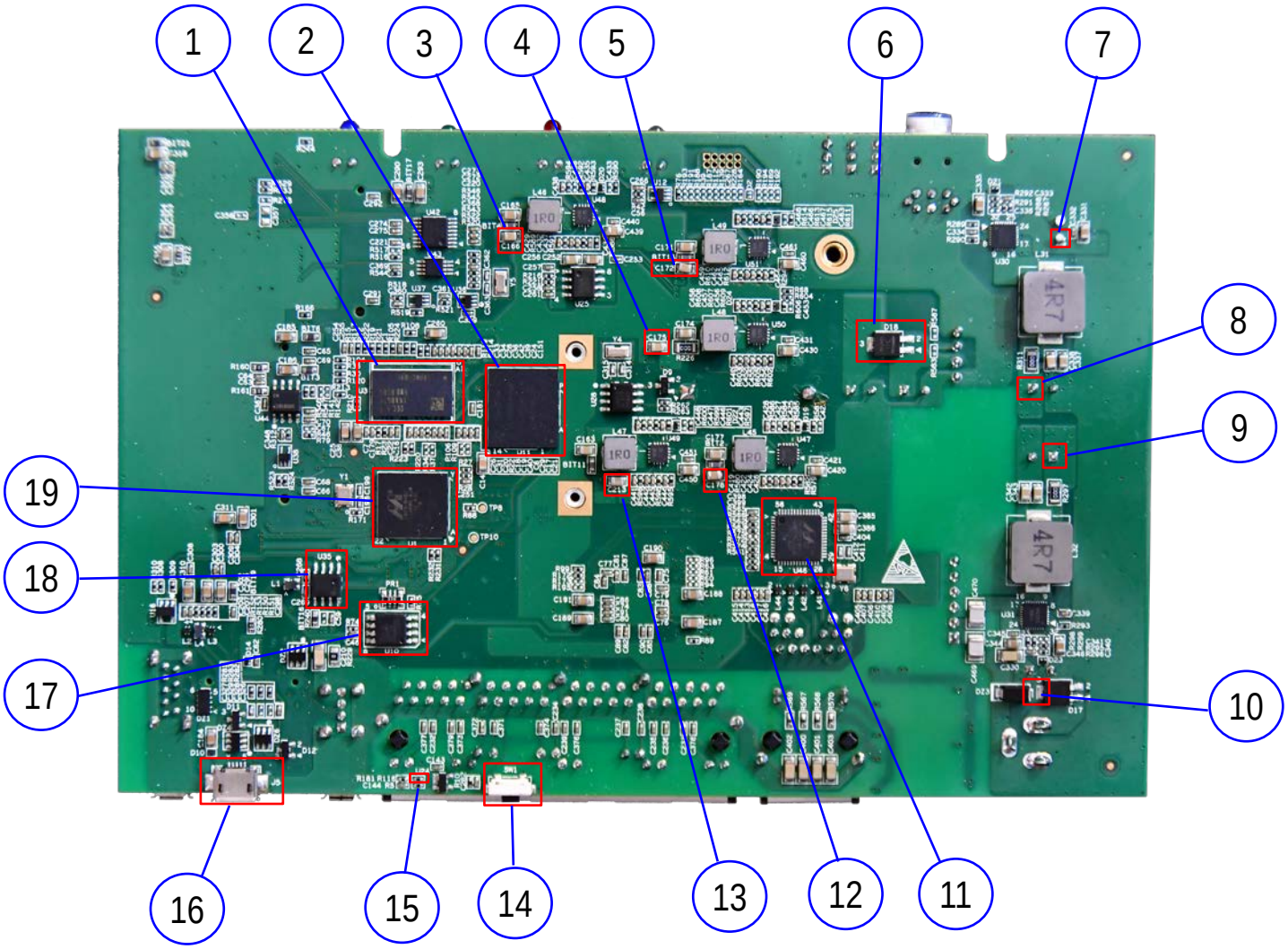

4. Bottom Side connectors and parts

Number	Part location	Name	
1	U3	SDRAM Rank1	16bit DDR4 (1GB)
2	U11	eMMC	8GB-8bit
3	C166	+1.2V (+DDR_VCC) power rail	5th power stage
4	C175	+1.1V (CPU_VCore)power rail	7th power stage
5	C172	+1.8V power rail	3rd power stage
6	D18	+12V POE output diode	Pin1/pin2 in, pin3 out to +12V power rail
7	EC1	+12V power rail	1st power stage (input)
8	EC2	+5V power rail	1st power stage (output)
9	EC4	+3.3V power rail	2nd power stage
10	D17	+12V DC power input diode	Pin1/pin2 in, pin3 out to +12V power rail
11	U46	Gb Ethernet PHY	Connected to J17
12	C178	+1.5V power rail	4th power stage
13	C213	+1.15V power rail	6th power stage
14	SW1	Reset switch	Press down to pull low MRn
15	R116	MRn	Low active master reset signal to CPU's SYSRSTn
16	J5	Micro-USB for console	UART1
17	U10	SPI NOR Flash Boot ROM	4MB
18	U35	UART to USB bridge	
19	U1	Marvell A3720 SoC	

E. Cable connection for testing

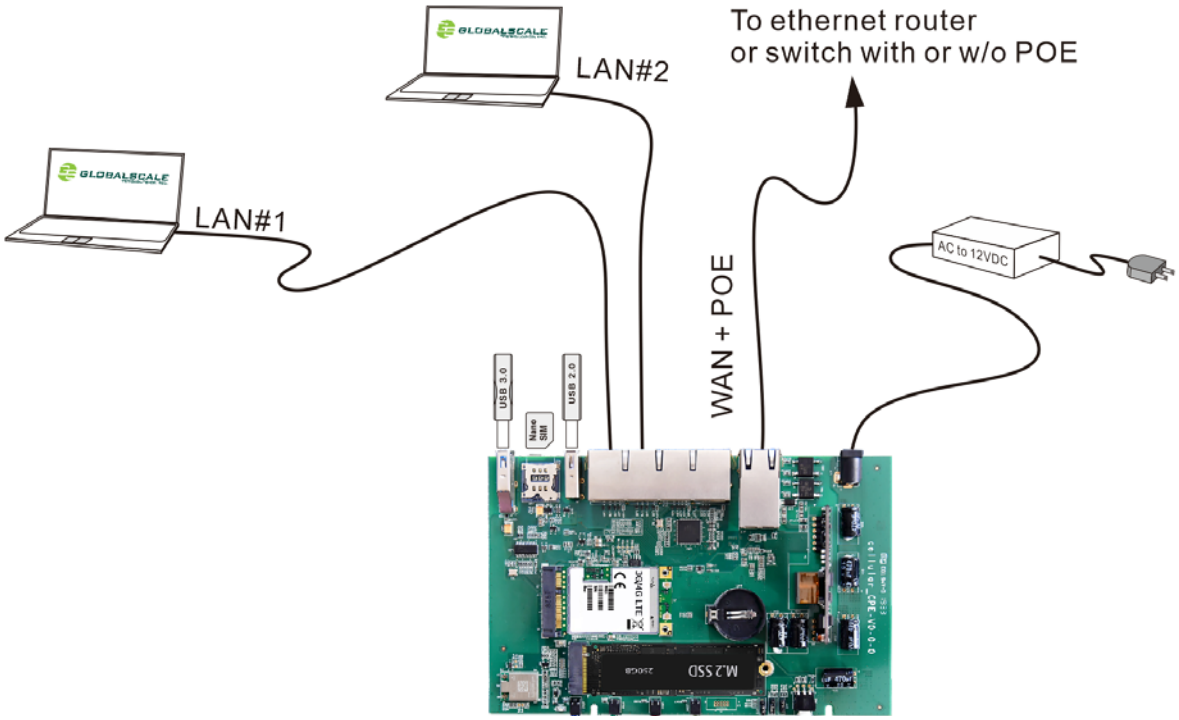

F. Find com port and connect with putty

1. Connect ESPRESSObin Ultra's micro-USB port (J5) to PC's USB port by USB cable
2. Go to [my computer] [device manager] and you will see a new COM port after plugging in the USB cable, here is COM4 for example

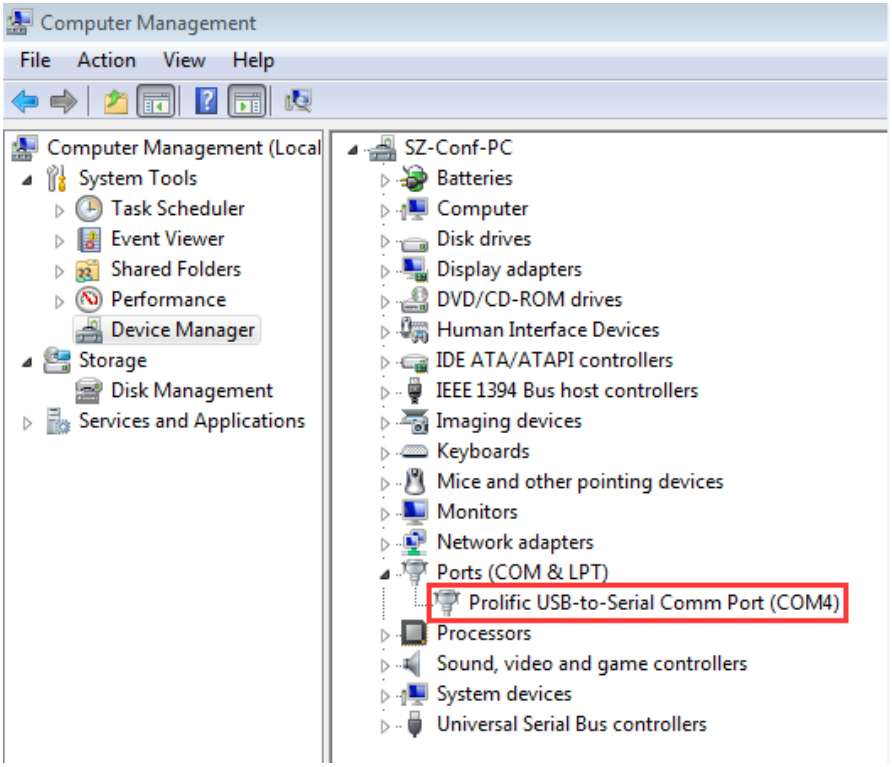

3. Run putty, select serial connection then enter the COM port you've found in the previous step, The baud rate speed is 115200 then press "open"

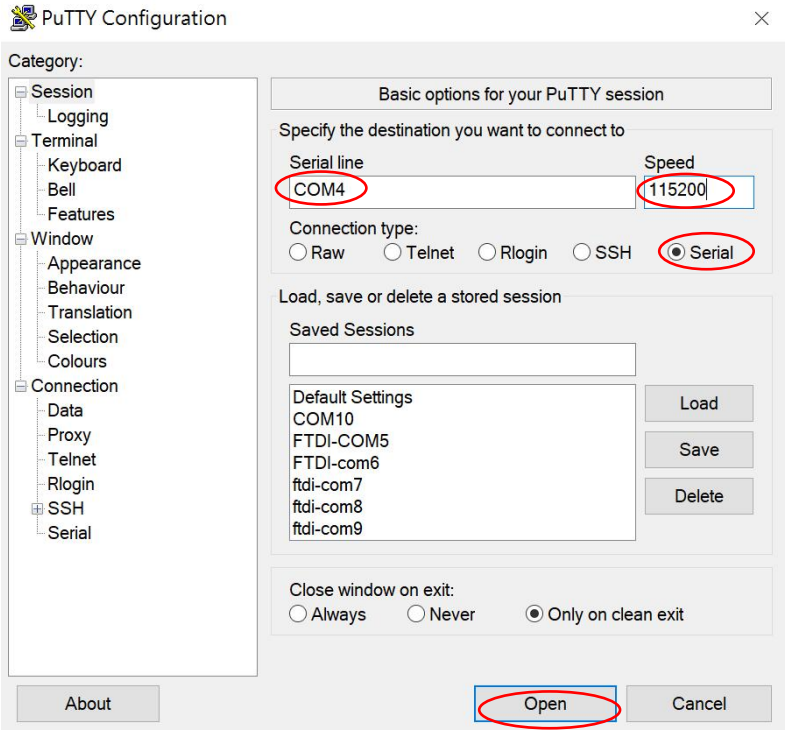

G. Start running ESPRESSObin Ultra

1. Check U-boot version and some system information

Power on the board then press enter to terminate uboot running, you can see messages on screen like the followings

```
Ubuntu 18.04 LTS ccpe999904 ttyMV0

#######################################
the default root password is 'admin'.
#######################################

ccpe999904 login: TIM-1.0
WTMI-devel-18.12.1-67f01b7
WTMI: system early-init
SVC REV: 5, CPU VDD voltage: 1.213V
NOTICE:  Booting Trusted Firmware
NOTICE:  BL1: v1.5(release):711ecd32 (Marvell-armada-18.09.4)
NOTICE:  BL1: Built : 15:20:15, Sep 18 2019
NOTICE:  BL1: Booting BL2
NOTICE:  BL2: v1.5(release):711ecd32 (Marvell-armada-18.09.4)
NOTICE:  BL2: Built : 15:20:18, Sep 18 2019
NOTICE:  BL1: Booting BL31
NOTICE:  BL31: v1.5(release):711ecd32 (Marvell-armada-18.09.4)
NOTICE:  BL31: Built : 15

U-Boot 2017.03-armada-18.09.1-g51aa6c4772 (Sep 18 2019 - 15:19:13 +0800)

Model: gti cellular cpe board
        CPU       1200 [MHz]
        L2        1200 [MHz]
        NB AXI    300 [MHz]
        SB AXI    250 [MHz]
        DDR       750 [MHz]
DRAM:   1 GiB
U-Boot DT blob at : 000000003f716f38
SF: Detected mx25u3235f with page size 256 Bytes, erase size 64 KiB, total 4 MiB
Comphy chip #0:
Comphy-0: USB3_HOST0
Comphy-1: PEX0              2.5 Gbps
Comphy-2: SATA0
SATA link 0 timeout.
AHCI 0001.0300 32 slots 1 ports 6 Gbps 0x1 impl SATA mode
flags: ncq led only pmp fbss pio slum part sxs
PCIE-0: Link up
MMC:    sdhci@d8000: 0
Net:    eth0: neta@30000 [PRIME]
Hit any key to stop autoboot:   0
Marvell>> <INTERRUPT>
```

```
Marvell>>
Marvell>> boot
```

Enter “boot” to continue boot up if interrupted.

2. Login root with password “admin”

```
#######################################
the default root password is 'admin'.
#######################################

ccpe999904 login: root
Password:
Last login: Wed Oct  9 01:12:03 UTC 2019 on ttyMV0
Welcome to Ubuntu 18.04 LTS (GNU/Linux 4.19.62-00013-gf37d8da9d13e aarch64)

 * Documentation:  https://help.ubuntu.com
 * Management:     https://landscape.canonical.com
 * Support:        https://ubuntu.com/advantage


  _______________
 / __/ __|  _ \ __|
| (_| (_|    _/ __|
 \___\___|__| |___|

Welcome to Cellulr CPE development board!

For security reason, we recommended to change the password after first login.

Do you want to change default password? [Y/n]:
```

You may decide here whether to change the password or not?

3. Check the login name and the current path

```
root@ccpe999904:~# whoami
root
root@ccpe999904:~# pwd
/root
root@ccpe999904:~#
```

4. Check the kernel version

Enter command: uname –a

```
root@ccpe999904:~# uname -a
Linux ccpe999904 4.19.62-00013-gf37d8da9d13e #33 SMP PREEMPT Wed Sep 18 07:43:37 CST 2019 aarch64
aarch64 aarch64 GNU/Linux
root@ccpe999904:~#
```

5. Check the CPU information

5.1. check with command “cat /proc/cpuinfo”

There are 2 processors as you shall see

```
root@ccpe999904:/# cd ..
root@ccpe999904:/# pwd
/
root@ccpe999904:/# cat /proc/cpuinfo
processor       : 0
BogoMIPS        : 25.00
Features        : fp asimd evtstrm aes pmull sha1 sha2 crc32 cpuid
CPU implementer : 0x41
CPU architecture: 8
CPU variant     : 0x0
CPU part        : 0xd03
CPU revision    : 4

processor       : 1
BogoMIPS        : 25.00
Features        : fp asimd evtstrm aes pmull sha1 sha2 crc32 cpuid
CPU implementer : 0x41
CPU architecture: 8
CPU variant     : 0x0
CPU part        : 0xd03
CPU revision    : 4

root@ccpe999904:/#
```

5.2. check with lscpu command

```
root@ccpe999904:/# lscpu
Architecture:          aarch64
Byte Order:            Little Endian
CPU(s):                2
On-line CPU(s) list: 0,1
Thread(s) per core:    1
Core(s) per socket:    2
Socket(s):             1
NUMA node(s):          1
Vendor ID:             ARM
Model:                 4
Model name:            Cortex-A53
Stepping:              r0p4
CPU max MHz:           1200.0000
CPU min MHz:           200.0000
BogoMIPS:              25.00
NUMA node0 CPU(s):     0,1
Flags:                 fp asimd evtstrm aes pmull sha1 sha2 crc32 cpuid
root@ccpe999904:/#
```

6. Check the Ethernet connection

6.1. Check with ifconfig command

Connect RJ45 cable from the WAN port to the ethernet router or switch
type in “ifconfig”

```
root@ccpe999904:/# ifconfig
br0: flags=4163<UP,BROADCAST,RUNNING,MULTICAST>  mtu 1500
        inet 192.168.84.1  netmask 255.255.255.0  broadcast 192.168.84.255
        inet6 fe80::f2ad:4eff:fe0b:f533  prefixlen 64  scopeid 0x20<link>
        ether f0:ad:4e:0b:f5:33  txqueuelen 1000  (Ethernet)
        RX packets 0  bytes 0 (0.0 B)
        RX errors 0  dropped 0  overruns 0  frame 0
        TX packets 15  bytes 1146 (1.1 KB)
        TX errors 0  dropped 0 overruns 0  carrier 0  collisions 0

eth0: flags=4419<UP,BROADCAST,RUNNING,PROMISC,MULTICAST>  mtu 1500
        inet6 fe80::251:82ff:fe11:2200  prefixlen 64  scopeid 0x20<link>
        ether 00:51:82:11:22:00  txqueuelen 1024  (Ethernet)
        RX packets 79  bytes 7933 (7.9 KB)
        RX errors 0  dropped 0  overruns 0  frame 0
        TX packets 53  bytes 5246 (5.2 KB)
        TX errors 0  dropped 0 overruns 0  carrier 0  collisions 0
        device interrupt 12

lan0: flags=4099<UP,BROADCAST,MULTICAST>  mtu 1500
        ether f0:ad:4e:99:99:00  txqueuelen 1000  (Ethernet)
        RX packets 0  bytes 0 (0.0 B)
        RX errors 0  dropped 0  overruns 0  frame 0
        TX packets 0  bytes 0 (0.0 B)
        TX errors 0  dropped 0 overruns 0  carrier 0  collisions 0

lan1: flags=4099<UP,BROADCAST,MULTICAST>  mtu 1500
        ether f0:ad:4e:99:99:01  txqueuelen 1000  (Ethernet)
        RX packets 0  bytes 0 (0.0 B)
        RX errors 0  dropped 0  overruns 0  frame 0
        TX packets 0  bytes 0 (0.0 B)
        TX errors 0  dropped 0 overruns 0  carrier 0  collisions 0

lan2: flags=4099<UP,BROADCAST,MULTICAST>  mtu 1500
        ether f0:ad:4e:99:99:02  txqueuelen 1000  (Ethernet)
        RX packets 0  bytes 0 (0.0 B)
        RX errors 0  dropped 0  overruns 0  frame 0
        TX packets 0  bytes 0 (0.0 B)
        TX errors 0  dropped 0 overruns 0  carrier 0  collisions 0
```

Ifconfig command (continued)

```
lan3: flags=4099<UP,BROADCAST,MULTICAST>  mtu 1500
        ether f0:ad:4e:99:99:03  txqueuelen 1000  (Ethernet)
        RX packets 0  bytes 0 (0.0 B)
        RX errors 0  dropped 0  overruns 0  frame 0
        TX packets 0  bytes 0 (0.0 B)
        TX errors 0  dropped 0 overruns 0  carrier 0  collisions 0

lo: flags=73<UP,LOOPBACK,RUNNING>  mtu 65536
        inet 127.0.0.1  netmask 255.0.0.0
        inet6 ::1  prefixlen 128  scopeid 0x10<host>
        loop  txqueuelen 1000  (Local Loopback)
        RX packets 6584  bytes 395690 (395.6 KB)
        RX errors 0  dropped 0  overruns 0  frame 0
        TX packets 6584  bytes 395690 (395.6 KB)
        TX errors 0  dropped 0 overruns 0  carrier 0  collisions 0

uap0: flags=4163<UP,BROADCAST,RUNNING,MULTICAST>  mtu 1500
        inet6 fe80::f2ad:4eff:fe0b:f533  prefixlen 64  scopeid 0x20<link>
        ether f0:ad:4e:0b:f5:33  txqueuelen 1000  (Ethernet)
        RX packets 0  bytes 0 (0.0 B)
        RX errors 0  dropped 0  overruns 0  frame 0
        TX packets 0  bytes 0 (0.0 B)
        TX errors 30  dropped 0 overruns 0  carrier 0  collisions 0

wan: flags=4163<UP,BROADCAST,RUNNING,MULTICAST>  mtu 1500
        inet 192.168.3.19  netmask 255.255.255.0  broadcast 192.168.3.255
        inet6 fe80::f2ad:4eff:fe99:9904  prefixlen 64  scopeid 0x20<link>
        ether f0:ad:4e:99:99:04  txqueuelen 1000  (Ethernet)
        RX packets 79  bytes 6195 (6.1 KB)
        RX errors 0  dropped 0  overruns 0  frame 0
        TX packets 37  bytes 3714 (3.7 KB)
        TX errors 0  dropped 0 overruns 0  carrier 0  collisions 0

root@ccpe999904:/#
```

6.2. Ping to verify the connection

```
root@ccpe999904:~# ping -c 10 www.google.com
PING www.google.com (216.58.200.228) 56(84) bytes of data.
64 bytes from tsa03s01-in-f228.1e100.net (216.58.200.228): icmp_seq=1 ttl=52 time=53.5 ms
64 bytes from tsa03s01-in-f228.1e100.net (216.58.200.228): icmp_seq=2 ttl=52 time=46.2 ms
64 bytes from tsa03s01-in-f228.1e100.net (216.58.200.228): icmp_seq=3 ttl=52 time=139 ms
64 bytes from tsa03s01-in-f228.1e100.net (216.58.200.228): icmp_seq=4 ttl=52 time=158 ms
64 bytes from tsa03s01-in-f228.1e100.net (216.58.200.228): icmp_seq=5 ttl=52 time=58.1 ms
64 bytes from tsa03s01-in-f228.1e100.net (216.58.200.228): icmp_seq=6 ttl=52 time=53.6 ms
64 bytes from tsa03s01-in-f228.1e100.net (216.58.200.228): icmp_seq=7 ttl=52 time=48.0 ms
64 bytes from tsa03s01-in-f228.1e100.net (216.58.200.228): icmp_seq=8 ttl=52 time=49.7 ms
64 bytes from tsa03s01-in-f228.1e100.net (216.58.200.228): icmp_seq=9 ttl=52 time=47.7 ms
64 bytes from tsa03s01-in-f228.1e100.net (216.58.200.228): icmp_seq=10 ttl=52 time=56.5 ms

--- www.google.com ping statistics ---
10 packets transmitted, 10 received, 0% packet loss, time 9006ms
rtt min/avg/max/mdev = 46.237/71.214/158.941/39.425 ms
root@ccpe999904:~#
root@ccpe999904:~#
root@ccpe999904:~# ping -c 10 www.baidu.com
PING www.wshifen.com (103.235.46.39) 56(84) bytes of data.
64 bytes from 103.235.46.39 (103.235.46.39): icmp_seq=1 ttl=52 time=73.5 ms
64 bytes from 103.235.46.39 (103.235.46.39): icmp_seq=2 ttl=52 time=63.2 ms
64 bytes from 103.235.46.39 (103.235.46.39): icmp_seq=3 ttl=52 time=71.8 ms
64 bytes from 103.235.46.39 (103.235.46.39): icmp_seq=4 ttl=52 time=70.3 ms
64 bytes from 103.235.46.39 (103.235.46.39): icmp_seq=5 ttl=52 time=82.1 ms
64 bytes from 103.235.46.39 (103.235.46.39): icmp_seq=6 ttl=52 time=79.0 ms
64 bytes from 103.235.46.39 (103.235.46.39): icmp_seq=7 ttl=52 time=74.2 ms
64 bytes from 103.235.46.39 (103.235.46.39): icmp_seq=8 ttl=52 time=81.5 ms
64 bytes from 103.235.46.39 (103.235.46.39): icmp_seq=9 ttl=52 time=71.9 ms
64 bytes from 103.235.46.39 (103.235.46.39): icmp_seq=10 ttl=52 time=117 ms

--- www.wshifen.com ping statistics ---
10 packets transmitted, 10 received, 0% packet loss, time 17014ms
rtt min/avg/max/mdev = 63.239/78.497/117.013/13.915 ms
root@ccpe999904:~#
root@ccpe999904:~#
```

6.3. Connect to uap0

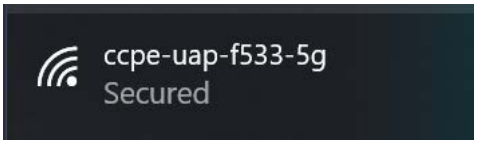

The password is ‘12345678’

below is uap0 information

SSID: ccpe-uap-f533-5g

Protocol: 802.11ac

Security type: WPA2-Personal

Network band: 5 GHz

Network channel: 36

Link-local IPv6 address: fe80::b18f:f5bc:f0d1:639b%9

IPv4 address: 192.168.84.123

IPv4 DNS servers: 192.168.84.1

Driver version: 2024.0.4.105

Physical address (MAC): B0-C0-90-BB-20-09

7. Check USB connection

7.1. Check USB device without USB disk plugged

Enter command: lsusb

Here are 1 USB3.0 port and 2 USB2.0 ports (one with USB3.0) found.

```
root@ccpe999904:~# lsusb
Bus 001 Device 003: ID 1286:204e Marvell Semiconductor, Inc.
Bus 001 Device 002: ID 1a40:0101 Terminus Technology Inc. Hub
Bus 001 Device 001: ID 1d6b:0002 Linux Foundation 2.0 root hub
Bus 003 Device 001: ID 1d6b:0003 Linux Foundation 3.0 root hub
Bus 002 Device 001: ID 1d6b:0002 Linux Foundation 2.0 root hub
root@ccpe999904:~#
```

7.2. Check USB device with 2 USB disks plugged and found

After inserting 1 USB2.0 flash disk and another USB3.0 flash disk

```
root@ccpe999904:~# lsusb
Bus 001 Device 003: ID 1286:204e Marvell Semiconductor, Inc.
Bus 001 Device 004: ID 0930:6545 Toshiba Corp. Kingston DataTraveler 102/2.0 / HEMA Flash Drive 2 GB /
PNY Attache 4GB Stick
Bus 001 Device 002: ID 1a40:0101 Terminus Technology Inc. Hub
Bus 001 Device 001: ID 1d6b:0002 Linux Foundation 2.0 root hub
Bus 003 Device 002: ID 05dc:a838 Lexar Media, Inc.
Bus 003 Device 001: ID 1d6b:0003 Linux Foundation 3.0 root hub
Bus 002 Device 001: ID 1d6b:0002 Linux Foundation 2.0 root hub
root@ccpe999904:~#
```

USB2.0 Flash disk

USB3.0 Flash disk

8. Check storage devices

8.1. cat /proc/partitions command

```
root@ccpe999904:/# cat /proc/partitions
major minor  #blocks  name

   1     0      48000 ram0
  31     0       3968 mtdblock0
  31     1         64 mtdblock1
  31     2         64 mtdblock2
 179     0    7636800 mmcblk0
 179     1    7635776 mmcblk0p1
   8     0    7843840 sda
   8     1    7839808 sda1
   8    16   15642624 sdb
   8    17   15642568 sdb1
root@ccpe999904:/#
```

USB2.0 Flash disk

USB3.0 Flash disk

8.2. fdisk -l command

```
root@ccpe999904:/# fdisk -l
Disk /dev/ram0: 46.9 MiB, 49152000 bytes, 96000 sectors
Units: sectors of 1 * 512 = 512 bytes
Sector size (logical/physical): 512 bytes / 4096 bytes
I/O size (minimum/optimal): 4096 bytes / 4096 bytes


Disk /dev/mtdblock0: 3.9 MiB, 4063232 bytes, 7936 sectors
Units: sectors of 1 * 512 = 512 bytes
Sector size (logical/physical): 512 bytes / 512 bytes
I/O size (minimum/optimal): 512 bytes / 512 bytes


Disk /dev/mtdblock1: 64 KiB, 65536 bytes, 128 sectors
Units: sectors of 1 * 512 = 512 bytes
Sector size (logical/physical): 512 bytes / 512 bytes
I/O size (minimum/optimal): 512 bytes / 512 bytes


Disk /dev/mtdblock2: 64 KiB, 65536 bytes, 128 sectors
Units: sectors of 1 * 512 = 512 bytes
Sector size (logical/physical): 512 bytes / 512 bytes
I/O size (minimum/optimal): 512 bytes / 512 bytes

Disk /dev/mmcblk0: 7.3 GiB, 7820083200 bytes, 15273600 sectors
Units: sectors of 1 * 512 = 512 bytes
Sector size (logical/physical): 512 bytes / 512 bytes
I/O size (minimum/optimal): 512 bytes / 512 bytes
Disklabel type: dos
Disk identifier: 0x89708921

Device          Boot Start      End   Sectors  Size Id Type
/dev/mmcblk0p1 *      2048 15273599 15271552  7.3G 83 Linux
```

```
Disk /dev/sda: 7.5 GiB, 8032092160 bytes, 15687680 sectors
Units: sectors of 1 * 512 = 512 bytes
Sector size (logical/physical): 512 bytes / 512 bytes
I/O size (minimum/optimal): 512 bytes / 512 bytes
Disklabel type: dos
Disk identifier: 0x49cd83fb

Device     Boot Start      End   Sectors  Size Id Type
/dev/sda1          8064 15687679 15679616  7.5G  b W95 FAT32


Disk /dev/sdb: 14.9 GiB, 16018046976 bytes, 31285248 sectors
Units: sectors of 1 * 512 = 512 bytes
Sector size (logical/physical): 512 bytes / 512 bytes
I/O size (minimum/optimal): 512 bytes / 512 bytes
Disklabel type: dos
Disk identifier: 0xc3072e18

Device     Boot Start      End   Sectors  Size Id Type
/dev/sdb1          112 31285247 31285136 14.9G  c W95 FAT32 (LBA)
root@ccpe999904:/# ^C
root@ccpe999904:/# ^C
root@ccpe999904:/# ^C
```

9. Top command

```
top - 07:49:19 up  3:26,  1 user,  load average: 0.12, 0.03, 0.01
Tasks: 101 total,   1 running,  53 sleeping,   0 stopped,   0 zombie
%Cpu(s):  0.2 us,  0.7 sy,  0.0 ni, 98.5 id,  0.0 wa,  0.5 hi,  0.2 si,  0.0 st
KiB Mem :  1016520 total,   802112 free,    61464 used,   152944 buff/cache
KiB Swap:        0 total,        0 free,        0 used.   882556 avail Mem

  PID USER      PR  NI    VIRT    RES    SHR S  %CPU %MEM     TIME+ COMMAND
 3975 root      20   0    7672   3364   2780 R   1.3  0.3   0:00.42 top
 1060 root      20   0       0      0      0 S   0.7  0.0   0:44.86 d0032004.m+
   19 root       0 -20       0      0      0 I   0.3  0.0   0:02.33 kworker/1:+
    1 root      20   0  160700   7808   5796 S   0.0  0.8   0:03.14 systemd
    2 root      20   0       0      0      0 S   0.0  0.0   0:00.04 kthreadd
    3 root       0 -20       0      0      0 I   0.0  0.0   0:00.00 rcu_gp
    4 root       0 -20       0      0      0 I   0.0  0.0   0:00.00 rcu_par_gp
    8 root       0 -20       0      0      0 I   0.0  0.0   0:00.00 mm_percpu_+
    9 root      20   0       0      0      0 S   0.0  0.0   0:00.14 ksoftirqd/0
   10 root      20   0       0      0      0 I   0.0  0.0   0:00.32 rcu_preempt
   11 root      20   0       0      0      0 I   0.0  0.0   0:00.02 rcu_sched
   12 root      20   0       0      0      0 I   0.0  0.0   0:00.00 rcu_bh
   13 root      rt   0       0      0      0 S   0.0  0.0   0:00.01 migration/0
   14 root      20   0       0      0      0 S   0.0  0.0   0:00.00 cpuhp/0
   15 root      20   0       0      0      0 S   0.0  0.0   0:00.00 cpuhp/1
   16 root      rt   0       0      0      0 S   0.0  0.0   0:00.01 migration/1
   17 root      20   0       0      0      0 S   0.0  0.0   0:00.02 ksoftirqd/1
```

FCC RF Exposure Information and Statement

This transmitter must not be in co-location or operating in conjunction with any other antenna or transmitter. This device complies with FCC RF radiation exposure limits set forth for an uncontrolled environment.This device should be installed and operated with a minimum distance of 20 centimetres between the device and your body.

FCC Warning

This device complies with Part 15 of the FCC Rules. Operation is subject to the following two conditions:
(1) This device may not cause harmful interference, and (2) this device must accept any interference received, including interference that may cause undesired operation.

NOTE 1: This equipment has been tested and found to comply with the limits for a Class B digital device, pursuant to part 15 of the FCC Rules. These limits are designed to provide reasonable protection against harmful interference in a residential installation. This equipment generates, uses and can radiate radio frequency energy and, if not installed and used in accordance with the instructions, may cause harmful interference to radio communications. However, there is no guarantee that interference will not occur in a particular installation. If this equipment does cause harmful interference to radio or television reception, which can be determined by turning the equipment off and on .

Any changes or modifications not expressly approved by the party respomsible for compliance could void the user's authority to operate the equipment.