Variant FCC RF Test Report

APPLICANT	:	Lenovo Mobile Communication Technology Ltd.
EQUIPMENT	:	Mobile Cellular Phone
BRAND NAME	:	Lenovo
MODEL NAME	:	Lenovo K53b36, Lenovo K53b37
FCC ID	:	YCNK53B3
STANDARD	:	FCC Part 15 Subpart C §15.247
CLASSIFICATION	:	(DTS) Digital Transmission System

This is a variant report which is only valid together with the original test report. The product was received on Sep. 14, 2016 and testing was completed on Sep. 24, 2016. We, SPORTON INTERNATIONAL (KUNSHAN) INC., would like to declare that the tested sample has been evaluated in accordance with the test procedures and has been in compliance with the applicable technical standards.

The test results in this report apply exclusively to the tested model / sample. Without written approval of SPORTON INTERNATIONAL (KUNSHAN) INC., the test report shall not be reproduced except in full.

James Huang

Prepared by: James Huang / Manager

Approved by: Jones Tsai / Manager

Testing Laboratory 2627

SPORTON INTERNATIONAL (KUNSHAN) INC.

No. 3-2, PingXiang Road, Kunshan, Jiangsu Province, P. R. China

TABLE OF CONTENTS

SUMMARY OF TEST RESULT **4**

1 GENERAL DESCRIPTION **5**

1.1 Applicant 5
1.2 Manufacturer 5
1.3 Product Feature of Equipment Under Test 5
1.4 Product Specification of Equipment Under Test 6
1.5 Specification of Accessory 6
1.6 Modification of EUT 6
1.7 Testing Location 7
1.8 Applicable Standards 7

2 TEST CONFIGURATION OF EQUIPMENT UNDER TEST **8**

2.1 Descriptions of Test Mode 8
2.2 Test Mode 8
2.3 Connection Diagram of Test System 9
2.4 EUT Operation Test Setup 9

3 TEST RESULT **10**

3.1 Peak Output Power Measurement 10
3.2 Radiated Band Edges and Spurious Emission Measurement 11

4 LIST OF MEASURING EQUIPMENT **15**

5 UNCERTAINTY OF EVALUATION **16**

APPENDIX A. RADIATED TEST RESULTS

APPENDIX B. DUTY CYCLE PLOTS

APPENDIX C. SETUP PHOTOGRAPHS

APPENDIX D. PRODUCT EQUALITY DECLARATION

REVISION HISTORY

REPORT NO.	VERSION	DESCRIPTION	ISSUED DATE
FR691407B	Rev. 01	This is a variant report for Lenovo K53b36, Lenovo K53b37. The product equality declaration could be referred to Appendix D. Based on the similarity between two models, only the power and the worst cases of Radiated Spurious Emission from original test report (Sporton Report Number FR662005B) were verified for the differences.	Oct. 31, 2016

SUMMARY OF TEST RESULT

Report Section	FCC Rule	Description	Limit	Result	Remark
3.1	15.247(b)(3)	Peak Output Power	≤ 30dBm	Pass	-
3.2	15.247(d)	Radiated Band Edges and Spurious Emission	15.209(a) & 15.247(d)	Pass	Under limit 10.89 dB at 31.940 MHz

1 General Description

1.1 Applicant

Lenovo Mobile Communication Technology Ltd.
No.999, Qishan North 2nd Road, Information & Optoelectronics Park, Torch Hi-tech Industry Development Zone, Xiamen, P.R.China

1.2 Manufacturer

Motorola Mobility LLC
222 W. Merchandise Mart Plaza, Chicago IL 60654 USA

1.3 Product Feature of Equipment Under Test

Product Feature	
Equipment	Mobile Cellular Phone
Brand Name	Lenovo
Model Name	Lenovo K53b36, Lenovo K53b37
FCC ID	YCNK53B3
EUT supports Radios application	GSM/GPRS/EGPRS/WCDMA/HSPA/DC-HSDPA/ HSPA+(16QAM uplink is not supported)/LTE/ WLAN2.4GHz 802.11b/g/n HT20/ Bluetooth v3.0+EDR/Bluetooth v4.0 LE/ Bluetooth v4.2 LE
IMEI Code	Radiation: Sample 1: 861901030036633/861901030036641
HW Version	82939_1_13
SW Version	K53_S016_160729_ROW
EUT Stage	Identical Prototype

Remark:

1. The above EUT's information was declared by manufacturer. Please refer to the specifications or user's manual for more detailed description.
2. There are two different types of EUT. They are single SIM card mobile (Model Name: Lenovo K53b37) and dual SIM card mobile (Model Name: Lenovo K53b36). The others are the same including circuit design, PCB board, structure and all components.

1.4 Product Specification of Equipment Under Test

Standards-related Product Specification	
Tx/Rx Frequency Range	2402 MHz ~ 2480 MHz
Number of Channels	40
Carrier Frequency of Each Channel	40 Channel(37 hopping + 3 advertising channel)
Maximum Output Power to Antenna	Bluetooth 4.0 LE: 0.42 dBm (0.0011 W) Bluetooth 4.2 LE: 0.16 dBm (0.0010 W)
Antenna Type / Gain	LDS Antenna with gain -4.93 dBi
Type of Modulation	Bluetooth LE : GFSK

1.5 Specification of Accessory

Specification of Accessory				
AC Adapter 1	**Brand Name**	Lenovo (Acbel)	**Model Name**	C-P35
	Power Rating	I/P: 100-240Vac, 300mA, O/P: 5.2Vdc, 2000mA		
AC Adapter 2	**Brand Name**	Lenovo (Huntkey)	**Model Name**	C-P35
	Power Rating	I/P: 100-240Vac, 500mA, O/P: 5.2Vdc, 2000mA		
Battery	**Brand Name**	Lenovo (SCUD)	**Model Name**	BL270
	Power Rating	3.85Vdc, 4000mAh		
Earphone	**Brand Name**	Lenovo (Cosonic)	**Model Name**	LS-118M
	Signal Line Type	1.1 meter, non-shielded cable, without ferrite core		
USB Cable 1	**Brand Name**	Lenovo(Starw)	**Model Name**	XJ-007070
	Signal Line Type	1.0 meter, non-shielded cable, without ferrite core		
USB Cable 2	**Brand Name**	Lenovo(Saibao)	**Model Name**	SWT-A053A
	Signal Line Type	1.0 meter, non-shielded cable, without ferrite core		
LCD Panel	**Brand Name**	O-FILM	**Model Name**	MTF-055-2594-03TMA
Camera_ Front	**Brand Name**	Q-Tech	**Model Name**	FX219BQS
Camera _ Rear	**Brand Name**	Sunny	**Model Name**	A16S05J-200
CTP Module	**Brand Name**	O-FILM	**Model Name**	Black：MCF-055-2594 White：MCF-055-2594 Golden：MCF-055-2594

1.6 Modification of EUT

No modifications are made to the EUT during all test items.

1.7 Testing Location

Test Site	SPORTON INTERNATIONAL (KUNSHAN) INC.	
Test Site Location	No. 3-2, PingXiang Road, Kunshan, Jiangsu Province, P. R. China TEL: +86-0512-5790-0158 FAX: +86-0512-5790-0958	
Test Site No.	**Sporton Site No.**	**FCC Registration No.**
	03CH03-KS	306251

Note: The test site complies with ANSI C63.4 2014 requirement.

1.8 Applicable Standards

According to the specifications of the manufacturer, the EUT must comply with the requirements of the following standards:

- FCC Part 15 Subpart C §15.247
- FCC KDB Publication No. 558074 D01 DTS Meas. Guidance v03r05
- ANSI C63.10-2013

Remark:

1. All test items were verified and recorded according to the standards and without any deviation during the test.
2. This EUT has also been tested and complied with the requirements of FCC Part 15, Subpart B, recorded in a separate test report.

2 Test Configuration of Equipment Under Test

2.1 Descriptions of Test Mode

The RF output power was recorded in the following table:

Channel	Frequency	Bluetooth LE RF Output Power	
		Data Rate / Modulation	
		GFSK	
		v4.0	v4.2
Ch00	2402MHz	-0.42 dBm	-1.01 dBm
Ch39	2441MHz	**0.42 dBm**	-0.08 dBm
Ch78	2480MHz	0.10 dBm	**0.16 dBm**

a. The EUT has been associated with peripherals and configuration operated in a manner tended to maximize its emission characteristics in a typical application. Frequency range investigated: radiation (9 kHz to the 10th harmonic of the highest fundamental frequency or to 40 GHz, whichever is lower). Pre-scanned tests, X, Y, Z in three orthogonal panels to determine the final configuration (X plane as worst plane) from all possible combinations.

2.2 Test Mode

The following summary table is showing all test modes to demonstrate in compliance with the standard.

Summary table of Test Cases	
Test Item	**Data Rate / Modulation**
	Bluetooth – LE / GFSK
Conducted TCs	Mode 1: Bluetooth Tx CH00_2402 MHz_1Mbps Mode 2: Bluetooth Tx CH19_2440 MHz_1Mbps Mode 3: Bluetooth Tx CH39_2480 MHz_1Mbps
Radiated TCs	Mode 1: Bluetooth Tx CH39_2480 MHz_1Mbps
Remark:	For Radiated Test Cases, The tests were performed with Adapter 1, Earphone, and USB Cable 1 for sample 1.

2.3 Connection Diagram of Test System

< Bluetooth v4.0 LE Tx Mode >

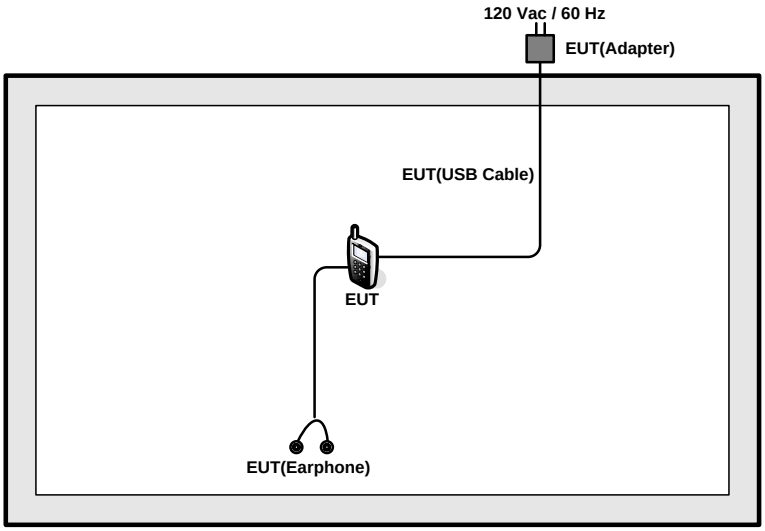

2.4 EUT Operation Test Setup

For Bluetooth LE function, the engineering test program was provided and enabled to make EUT continuous transmit/receive.

3 Test Result

3.1 Peak Output Power Measurement

3.1.1 Limit of Peak Output Power

For systems using digital modulation in the 2400-2483.5MHz, the limit for peak output power is 30dBm. If transmitting antenna of directional gain greater than 6dBi is used, the peak output power from the intentional radiator shall be reduced below the above stated value by the amount in dB that the directional gain of the antenna exceeds 6 dBi. In case of point-to-point operation, the limit has to be reduced by 1dB for every 3dB that the directional gain of the antenna exceeds 6dBi.

3.1.2 Measuring Instruments

The section 4.0 of List of Measuring Equipment of this test report is used for test.

3.1.3 Test Procedures

1. The testing follows the Measurement Procedure of FCC KDB No. 558074 DTS D01 Meas. Guidance v03r05 section 9.1.2 PKPM1 Peak power meter method.
2. The RF output of EUT was connected to the power meter by RF cable and attenuator. The path loss was compensated to the results for each measurement.
3. Set to the maximum power setting and enable the EUT transmit continuously.
4. Measure the conducted output power and record the results in the test report.

3.1.4 Test Setup

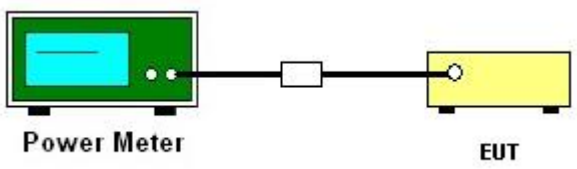

3.2 Radiated Band Edges and Spurious Emission Measurement

3.2.1 Limit of Radiated Band Edges and Spurious Emission

In any 100 kHz bandwidth outside the intentional radiator frequency band, all harmonics/spurious must be at least 20 dB below the highest emission level within the authorized band. If the output power of this device was measured by spectrum analyzer, the attenuation under this paragraph shall be 30 dB instead of 20 dB. In addition, radiated emissions which fall in the restricted bands must also comply with the FCC section 15.209 limits as below.

Frequency (MHz)	Field Strength (microvolts/meter)	Measurement Distance (meters)
0.009 – 0.490	2400/F(kHz)	300
0.490 – 1.705	24000/F(kHz)	30
1.705 – 30.0	30	30
30 – 88	100	3
88 – 216	150	3
216 - 960	200	3
Above 960	500	3

3.2.2 Measuring Instruments

The section 4.0 of List of Measuring Equipment of this test report is used for test.

3.2.3 Test Procedures

1. The testing follows FCC KDB Publication No. 558074 D01 DTS Meas. Guidance v03r05.
2. The EUT was arranged to its worst case and then tune the antenna tower (from 1 m to 4 m) and turntable (from 0 degree to 360 degrees) to find the maximum reading. A pre-amp and a high pass filter are used for the test in order to get better signal level.
3. The EUT was placed on a turntable with 0.8 meter for frequency below 1GHz and 1.5 meter for frequency above 1GHz respectively above ground.
4. The EUT was set 3 meters from the interference receiving antenna, which was mounted on the top of a variable height antenna tower.
5. Corrected Reading: Antenna Factor + Cable Loss + Read Level - Preamp Factor = Level
6. For measurement below 1GHz, If the emission level of the EUT measured by the peak detector is 3 dB lower than the applicable limit, the peak emission level will be reported. Otherwise, the emission measurement will be repeated using the quasi-peak detector and reported.
7. Use the following spectrum analyzer settings:
   (1) Span shall wide enough to fully capture the emission being measured;
   (2) Set RBW=100 kHz for f < 1 GHz; VBW ≥ RBW; Sweep = auto; Detector function = peak; Trace = max hold;
   (3) Set RBW = 1 MHz, VBW= 3MHz for f ≥ 1 GHz for peak measurement.
   For average measurement:
   - VBW = 10 Hz, when duty cycle is no less than 98 percent.
   - VBW ≥ 1/T, when duty cycle is less than 98 percent where T is the minimum transmission duration over which the transmitter is on and is transmitting at its maximum power control level for the tested mode of operation.

3.2.4 Test Setup

For radiated emissions below 30MHz

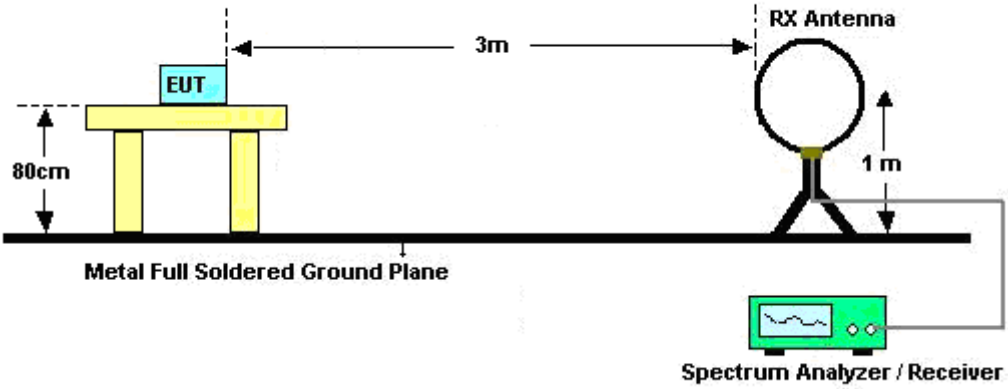

For radiated emissions from 30MHz to 1GHz

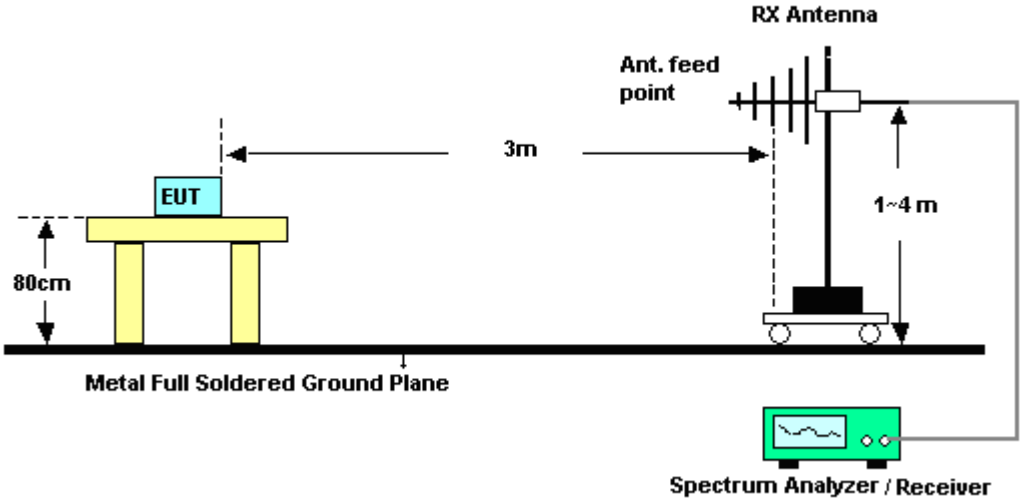

For radiated emissions above 1GHz

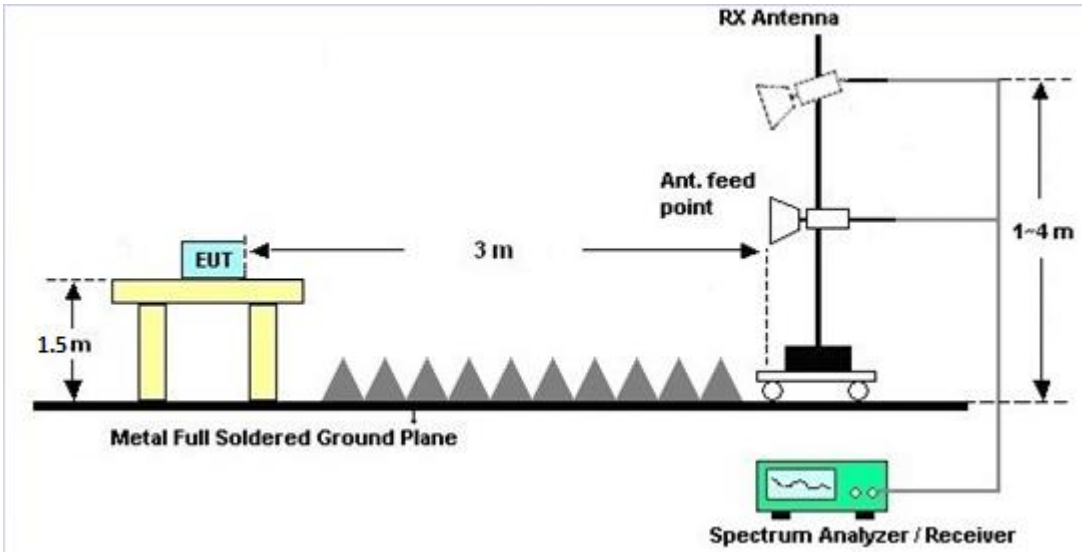

3.2.5 Test Results of Radiated Spurious Emissions (9 kHz ~ 30 MHz)

The low frequency, which started from 9 kHz to 30MHz, was pre-scanned and the result which was 20dB lower than the limit line per 15.31(o) was not reported.

3.2.6 Test Result of Radiated Spurious at Band Edges

Please refer to Appendix A.

3.2.7 Duty Cycle

Please refer to Appendix B.

3.2.8 Test Result of Radiated Spurious Emission (30MHz ~ 10th Harmonic)

Please refer to Appendix A.

4 List of Measuring Equipment

Instrument	Manufacturer	Model No.	Serial No.	Characteristics	Calibration Date	Test Date	Due Date	Remark
EMI Test Receiver	R&S	ESCI	100534	9kHz~3GHz	Oct. 24, 2015	Sep. 24, 2016	Oct. 23, 2016	Radiation (03CH03-KS)
EXA Spectrum Analyzer	Keysight	N9010A	MY55150244	10Hz~44GHz	Apr. 22, 2016	Sep. 24, 2016	Apr. 21, 2017	Radiation (03CH03-KS)
Loop Antenna	R&S	HFH2-Z2	100321	9kHz~30MHz	Nov. 07, 2015	Sep. 24, 2016	Nov. 06, 2016	Radiation (03CH03-KS)
Bilog Antenna	TeseQ	CBL6112D	35406	25MHz-2GHz	Apr. 16, 2016	Sep. 24, 2016	Apr. 15, 2017	Radiation (03CH03-KS)
Horn Antenna	Schwarzbeck	BBHA9120D	9120D-1356	1GHz~18GHz	Apr. 16, 2016	Sep. 24, 2016	Apr. 15, 2017	Radiation (03CH03-KS)
SHF-EHF Horn	com-power	AH-840	101070	18GHz~40GHz	Oct. 10, 2015	Sep. 24, 2016	Oct. 09, 2016	Radiation (03CH03-KS)
Amplifier	SONOMA	310N	187289	9kHz~1GHz	Aug. 09, 2016	Sep. 24, 2016	Aug. 08, 2017	Radiation (03CH03-KS)
Amplifier	MITEQ	TTA1840-35-HG	1887435	18GHz~40GHz	Jan. 20, 2016	Sep. 24, 2016	Jan. 19, 2017	Radiation (03CH03-KS)
Amplifier	Agilent	8449B	3008A02370	1GHz~26.5GHz	Oct. 24, 2015	Sep. 24, 2016	Oct. 23, 2016	Radiation (03CH03-KS)
AC Power Source	Chroma	61601	F104090004	N/A	NCR	Sep. 24, 2016	NCR	Radiation (03CH03-KS)
Turn Table	ChamPro	EM 1000-T	060762-T	0~360 degree	NCR	Sep. 24, 2016	NCR	Radiation (03CH03-KS)
Antenna Mast	ChamPro	EM 1000-A	060762-A	1 m~4 m	NCR	Sep. 24, 2016	NCR	Radiation (03CH03-KS)

NCR: No Calibration Required

5 Uncertainty of Evaluation

Uncertainty of Radiated Emission Measurement (30 MHz ~ 1000 MHz)

Measuring Uncertainty for a Level of Confidence of 95% (U = 2Uc(y))	4.5dB

Uncertainty of Radiated Emission Measurement (1GHz ~ 18GHz)

Measuring Uncertainty for a Level of Confidence of 95% (U = 2Uc(y))	4.5dB

Uncertainty of Radiated Emission Measurement (18GHz~40GHz)

Measuring Uncertainty for a Level of Confidence of 95% (U = 2Uc(y))	4.6dB

Appendix A. Radiated Spurious Emission

2.4GHz 2400~2483.5MHz

BLE (Band Edge @ 3m)

BLE	Note	Frequency	Level	Over Limit	Limit Line	Read Level	Antenna Factor	Cable Loss	Preamp Factor	Ant Pos	Table Pos	Peak Avg.	Pol.
		(MHz)	(dBμV/m)	(dB)	(dBμV/m)	(dBμV)	(dB/m)	(dB)	(dB)	(cm)	(deg)	(P/A)	(H/V)
BLE CH 39 2480MHz		2486.2	51.4	-22.6	74	55.19	27.64	5.51	36.94	110	90	P	H
		2483.5	42.79	-11.21	54	46.58	27.64	5.51	36.94	110	90	A	H
	*	2480	95.73	-	-	99.52	27.64	5.51	36.94	110	90	P	H
	*	2480	94.5	-	-	98.29	27.64	5.51	36.94	110	90	A	H
		2484.46	51.3	-22.7	74	55.09	27.64	5.51	36.94	381	311	P	V
		2483.5	41.73	-12.27	54	45.52	27.64	5.51	36.94	381	311	A	V
	*	2480	90.75	-	-	94.54	27.64	5.51	36.94	381	311	P	V
	*	2480	90.23	-	-	94.02	27.64	5.51	36.94	381	311	A	V
Remark	1. No other spurious found. 2. All results are PASS against Peak and Average limit line.												

2.4GHz 2400~2483.5MHz

BLE (Harmonic @ 3m)

BLE	Note	Frequency (MHz)	Level (dBμV/m)	Over Limit (dB)	Limit Line (dBμV/m)	Read Level (dBμV)	Antenna Factor (dB/m)	Cable Loss (dB)	Preamp Factor (dB)	Ant Pos (cm)	Table Pos (deg)	Peak Avg. (P/A)	Pol. (H/V)
BLE CH 39 2480MHz		4962	42.52	-31.48	74	39.61	31.72	7.82	36.63	100	360	P	H
		7440	45.51	-28.49	74	37.97	34.44	9.87	36.77	100	360	P	H
		4962	42.38	-31.62	74	39.47	31.72	7.82	36.63	100	360	P	V
		7440	45.89	-28.11	74	38.35	34.44	9.87	36.77	100	360	P	V
Remark	1. No other spurious found. 2. All results are PASS against Peak and Average limit line.												

Emission below 1GHz

2.4GHz BLE (LF)

BLE	Note	Frequency	Level	Over Limit	Limit Line	Read Level	Antenna Factor	Cable Loss	Preamp Factor	Ant Pos	Table Pos	Peak Avg.	Pol.
		(MHz)	(dBμV/m)	(dB)	(dBμV/m)	(dBμV)	(dB/m)	(dB)	(dB)	(cm)	(deg)	(P/A)	(H/V)
2.4GHz BLE LF		31.94	19.63	-20.37	40	33.18	18.32	0.68	32.55	157	68	P	H
		102.75	16.88	-26.62	43.5	34.81	13.14	1.23	32.3	-	-	P	H
		146.4	18.7	-24.8	43.5	35.93	13.75	1.46	32.44	-	-	P	H
		258.92	17.3	-28.7	46	34.37	13.5	1.8	32.37	-	-	P	H
		323.91	18.15	-27.85	46	32.85	15.33	2.21	32.24	-	-	P	H
		921.43	25.28	-20.72	46	29.74	23.15	3.9	31.51	-	-	P	H
		31.94	29.11	-10.89	40	42.66	18.32	0.68	32.55	100	271	P	V
		44.55	25.05	-14.95	40	44.02	12.8	0.83	32.6	-	-	P	V
		60.07	23.23	-16.77	40	48.02	6.8	0.92	32.51	-	-	P	V
		147.37	17.54	-25.96	43.5	34.75	13.76	1.47	32.44	-	-	P	V
		323.91	21.3	-24.7	46	36	15.33	2.21	32.24	-	-	P	V
		878.75	24.56	-21.44	46	29.83	22.59	3.79	31.65	-	-	P	V
Remark	1. No other spurious found. 2. All results are PASS against limit line.												

Note symbol

*	**Fundamental Frequency** which can be ignored. However, the level of any unwanted emissions shall not exceed the level of the fundamental frequency.
!	Test result is **over limit** line.
P/A	**P**eak or **A**verage
H/V	**H**orizontal or **V**ertical

A calculation example for radiated spurious emission is shown as below:

WIFI	Note	Frequency	Level	Over	Limit	Read	Antenna	Cable	Preamp	Ant	Table	Peak	Pol.
Ant.				Limit	Line	Level	Factor	Loss	Factor	Pos	Pos	Avg.	
1+2		(MHz)	(dBμV/m)	(dB)	(dBμV/m)	(dBμV)	(dB/m)	(dB)	(dB)	(cm)	(deg)	(P/A)	(H/V)
802.11b CH 01 2412MHz		2390	55.45	-18.55	74	54.51	32.22	4.58	35.86	103	308	P	H
		2390	43.54	-10.46	54	42.6	32.22	4.58	35.86	103	308	A	H

1. Level(dBμV/m) =

Antenna Factor(dB/m) + Cable Loss(dB) + Read Level(dBμV) - Preamp Factor(dB)

2. Over Limit(dB) = Level(dBμV/m) – Limit Line(dBμV/m)

For Peak Limit @ 2390MHz:

1. Level(dBμV/m)

= Antenna Factor(dB/m) + Cable Loss(dB) + Read Level(dBμV) - Preamp Factor(dB)

= 32.22(dB/m) + 4.58(dB) + 54.51(dBμV) – 35.86 (dB)

= 55.45 (dBμV/m)

2. Over Limit(dB)

= Level(dBμV/m) – Limit Line(dBμV/m)

= 55.45(dBμV/m) – 74(dBμV/m)

= -18.55(dB)

For Average Limit @ 2390MHz:

1. Level(dBμV/m)

= Antenna Factor(dB/m) + Cable Loss(dB) + Read Level(dBμV) - Preamp Factor(dB)

= 32.22(dB/m) + 4.58(dB) + 42.6(dBμV) – 35.86 (dB)

= 43.54 (dBμV/m)

2. Over Limit(dB)

= Level(dBμV/m) – Limit Line(dBμV/m)

= 43.54(dBμV/m) – 54(dBμV/m)

= -10.46(dB)

Both peak and average measured complies with the limit line, so test result is "PASS".

Appendix B. Duty Cycle Plots

Band	Duty Cycle(%)	T(ms)	1/T(kHz)	VBW Setting
Bluetooth 4.0 LE	62.35	0.39	2.56	3kHz

Bluetooth 4.0 LE

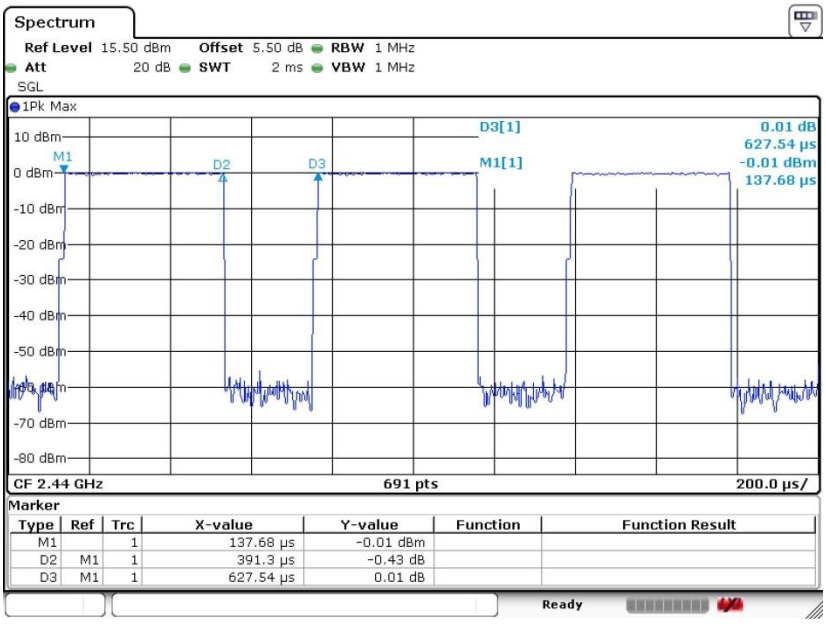

Appendix D. Product Equality Declaration

Lenovo Mobile Communication Technology Ltd.
No.999, Qishan North 2nd Road, Information & Optoelectronics Park, Torch Hi-tech Industry Development Zone, Xiamen, P.R.China
Tel: 86-10-58866181; Fax: 86-10-56720293

Date: October 26, 2016

Product Equality Declaration

We, Lenovo Mobile Communication Technology Ltd., declare on our sole responsibility for the product of **Lenovo K53b36（Dual Sim）& Lenovo K53b37(Single Sim)** as below:

The differences between Lenovo K53b36（Dual Sim）& Lenovo K53b37(Single Sim) and previous as below:

Object		1st Source spec(G5.5)	2nd Source spec(G6.0)
LCD	The BLU code is not consistent	Item number code for TL055VDXP64-00	Item number code for TL055VDMP02-00
	BLU protective film color	wathet	carmine
	FPC shape difference	Bonding pad in FPC LCM appearance shape distance is 1.72, welding positioning hole is circular	Bonding pad in FPC LCM appearance shape distance is 2.52, the welding location hole for semicircle
	FPC jet printing on Mark is not consistent	sprinkle TL055VDXP64-00-FPC1	sprinkle TL055VDMP02-00-FPC1
	Glass border is not the same	1.0border	0.8border
	IC difference	Hx8399c	NT35596

And also **the variant test （2nd Source）reduces WCDMA Band Ⅱ power level comparing with the original test（2nd Source）.**

Except listings above, the others are all the same.

Should you have any questions or comments regarding this matter, please have my best attention.

Sincerely yours,

Weiting Sun

Contact Person: Sun weiting
COMPANY: Lenovo Mobile Communication Technology Ltd.
Tel: 86-10-58866181
Fax: 86-10-57874529
E-Mail: sunwt1@lenovo.com