bryton®

Rider 420

快速使用指南

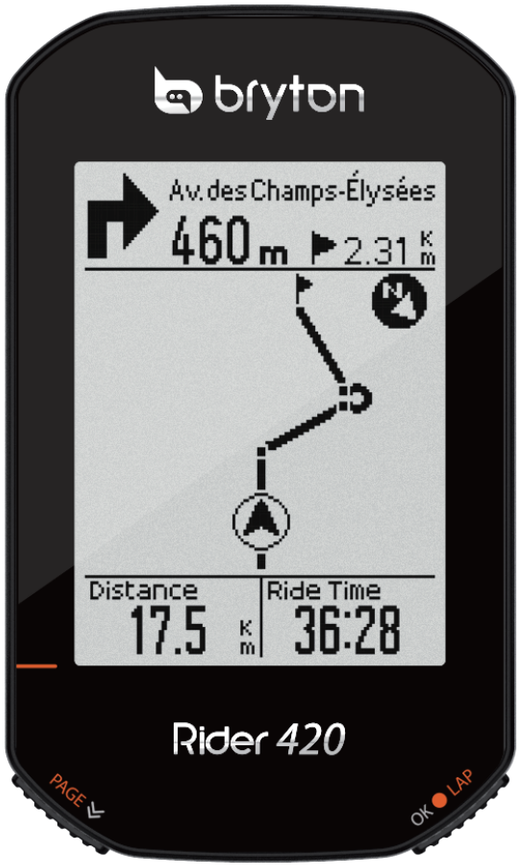

Download
Bryton Mobile App

www.brytonsport.com

Bryton

A01

Charge your Rider 420

Connect Rider420 to a PC to charge the battery for at least 4 hours.
Unplug the device when it is fully charged.

- You may see a white screen when the batteryis really low. Keep the decice plugged for several minutes, it will automatically turn-on after battery is properly charged.
- The temperature suitable for charging battery is 0°C ~ 40°C. Beyond this temperature range, chargeing will be terminated and the device will draw power from battery.

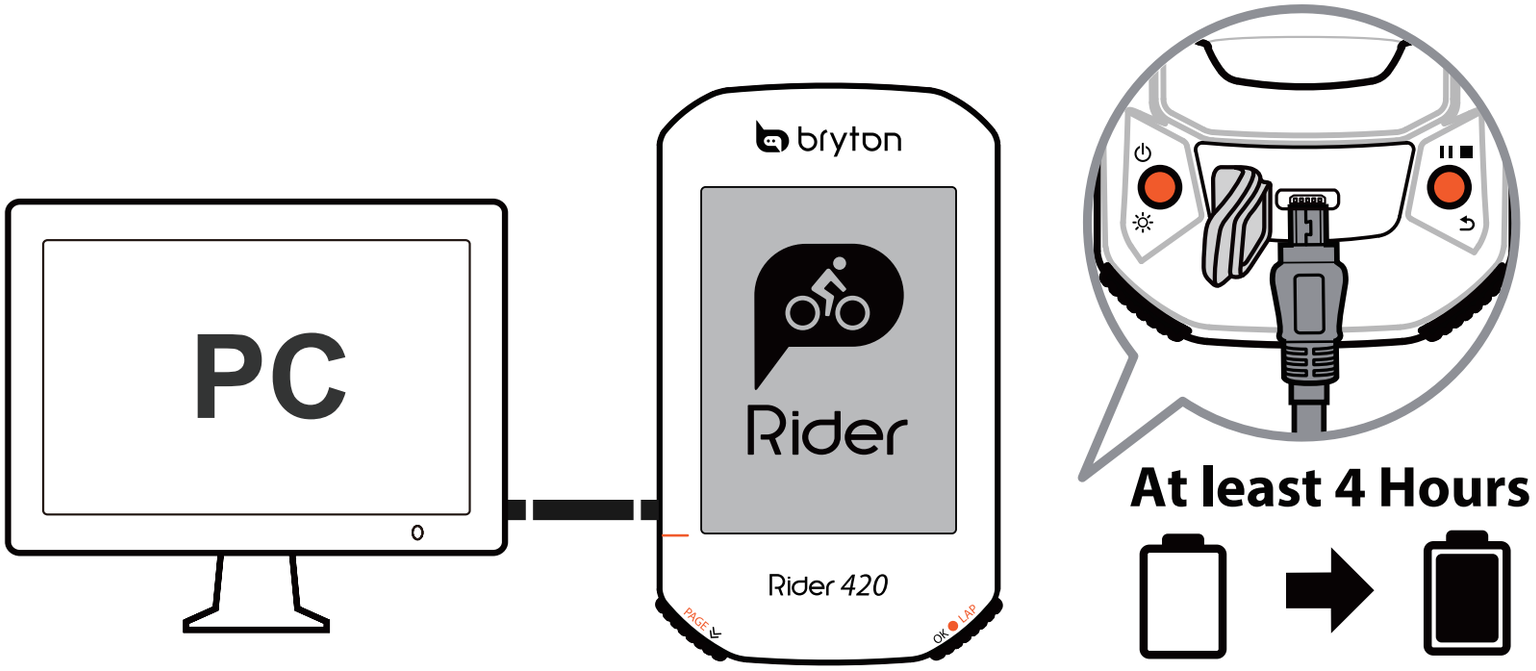

Key Functions

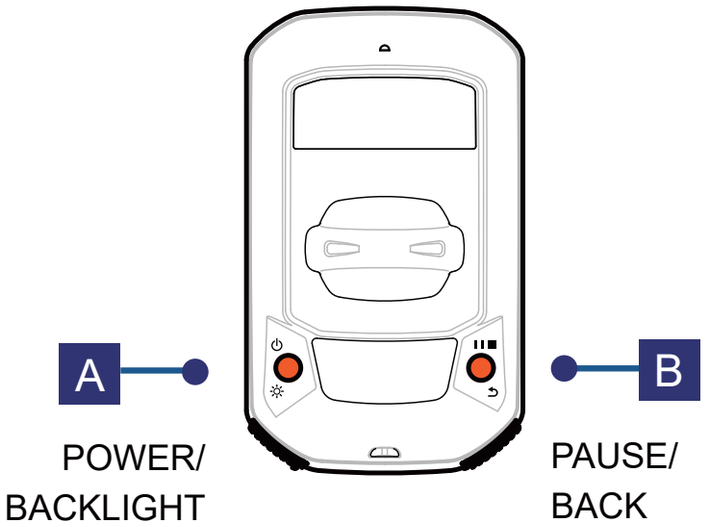

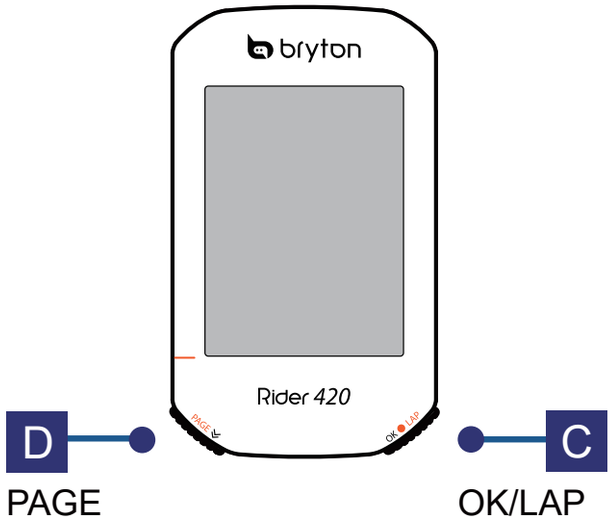

A. Power/Backlight (⏻☼)
Press to turn the device on.
Press to turn on/off the backlight while the device is on.
Long Press to turn the device off.

B. BACK (⮌II■)
In Cycling mode, press to enter Menu page.
In Menu, press to return to the previous page or cancel an operation.
When recording, press to pause recording and enter the Menu.

C. OK/LAP (OK●LAP)
In Menu, press to enter submenu or confirm a selection.
In Cycling mode, press to start recording.
When recording, press to mark the lap.

D. Page/Down (PAGE⩔)
In Cycling mode, press to switch meter screen pages.
In Menu, press to scroll through the menu options.
In Cycling mode, long press to enter into Shortcut Menu.

Reboot Rider
Press (⏻ / ⮌II■) at the same time to reboot the device.

Getting Started

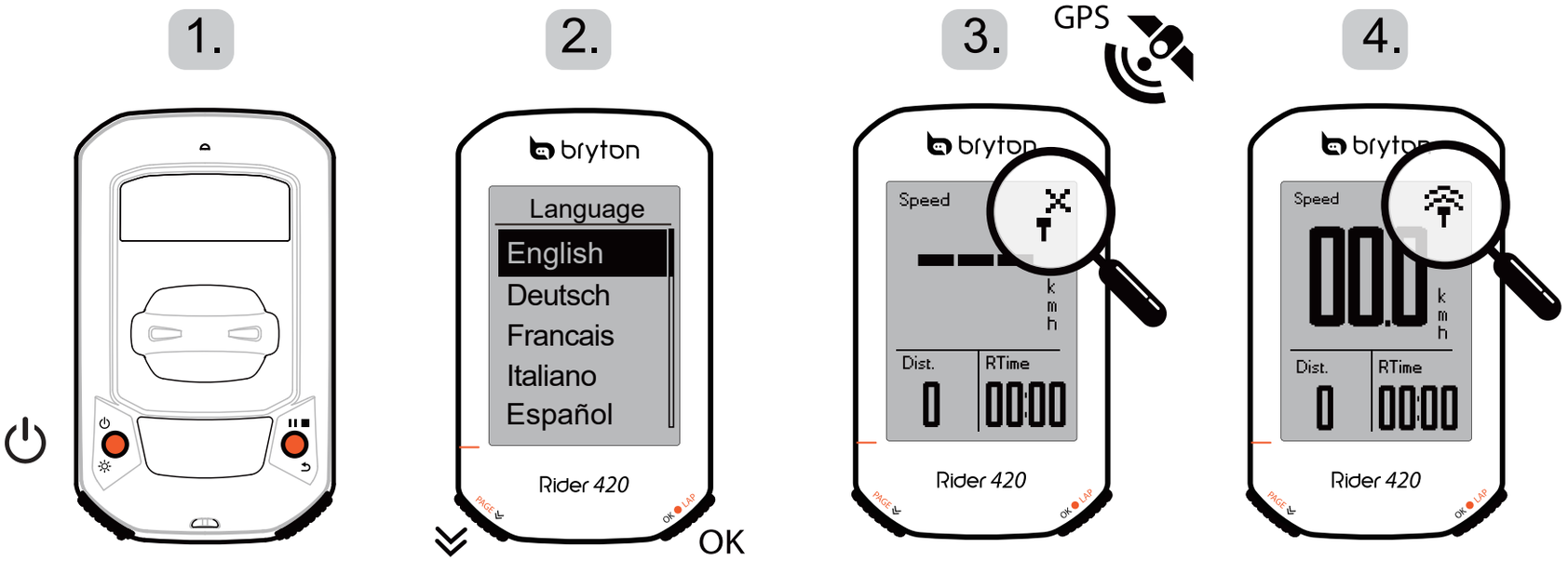

Please charge your device for at least 4 hours before the first use.
To begin

1. Press ⏻ to turn on the device.
2. Press PAGE ⌄ to select the display language and press OK●LAP to confirm the selection.
3. Press PAGE ⌄ to select the unit and press OK●LAP to confirm the selection.
4. Device will automatically search for satellite signals.
5. After GPS signal is fixed *,(→) just ride on and enjoy your workout in free cycling mode.
   To record, press OK●LAP to start recording.

*To get GPS acquisition, please take the device to an open sky outdoor environment.

Follow Track

With the Follow Track feature, you can plan trips via Bryton Active App, use pervious rides from History or download gpx tracks online.

Plan Trip via Bryton Active App

1. Download Bryton Active App.
2. Sign up / log in on Bryton Active App.
3. Select “Course” > “Plan Trip” to set Start point and Destination by tapping on the map or input address in left Search Bar.
4. Download the planned trip to "My Route" by tapping the Arrow icon .
5. Go to "My Route" and download a route to device by tapping the route and then the device icon .
6. In the Main Menu, select Follow Track > View and select the planned track and press OK●LAP to start following the track.

From Device History

1. In the Main Menu, select View History > View to select the desired tracks.
2. Enter into More and select Create Track.
3. Enter a name of the track and press OK●LAP to save it.
4. Press ↩II■ to be back to the Main Menu.
5. Select Follow Track > View and select the saved track and press OK●LAP to start following the track.

From 3rd Party Websites

1. Download gpx files to your computer.
2. Use USB cable to connect the device to the computer.
3. Copy the gpx files from your computer and paste to the Extra Files folder of the device.
4. Remove USB cable.
5. In the Main Menu, select Follow Track > View and press OK●LAP to start following the track.

Note: You can also import routes from 3rd party platforms/websites via Bryton Active App.

Upload/Share Your Tracks via USB

1. Connect the device to your computer via USB cable.
2. Select fit files from Bryton folder in the device.
3. Upload files to brytonactive.com and popular training sites including STRAVA, TrainingPeaks, Endomondo, Map My Ride, Fit track and many more.

Icon Description

1 2	Bike 1/2		Heart Rate Sensor Active	watt	Power Meter Active
/ - - -	No Signal (not fixed)		Cadence Sensor Active		Log Record in Progress
/	Weak Signal (fixed)/ Strong Signal (fixed)		Speed Sensor Active		Recording is paused
/	Power Status		Dual Sensor Active	/	Current speed is faster/slower than average speed

Note:

- For Firmware Update, please go to www.brytonsport.com> (Menu) > Support > Download.
- For Video Instructions, please go to www.brytonsport.com> (Menu) > Support > Tutorial.
- For User Manual, please go to www.brytonsport.com> (Menu) > Support > Download > Manual > User Manuals.

Specifications

Item	Description
Display	2.3″ FSTN positive transflective dot-matrix LCD
Pysical Size	83.9 X 49.9 X 16.9 mm
Weight	61g
Operating Temperature	-10°C ~ 60°C
Battery Charging Temperature	0°C ~ 40°C
Battery	Li polymer rechargeable battery
Battery Life	35 hours with open sky
ANT+™	www.thisisant.com/directory for compatible products.
GNSS	Integrated high-sensitivity GNSS receiver with embedded antenna
BLE Smart	Bluetooth smart wireless technology with embedded antenna 2.4GHz band 0dBm
Water Resistant	Water resistant to a depth of 1 meter for up to 30 minutes.
Barometer	Equipped with barometer

Appendix

Mount Rider 420 to the Bike

1

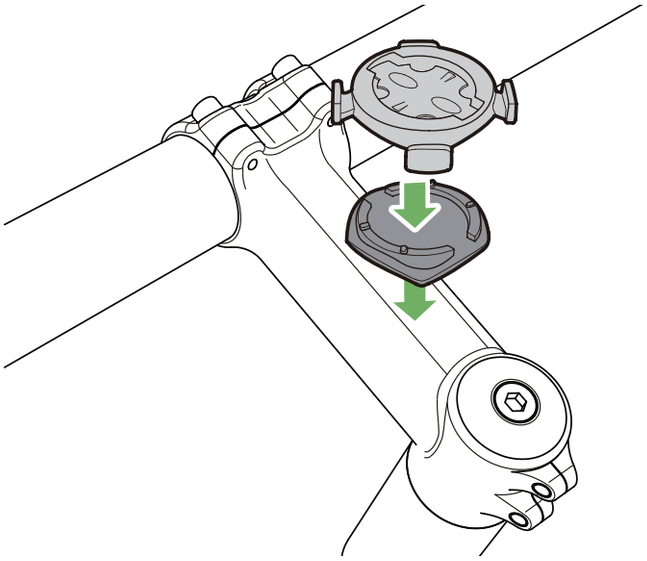

2

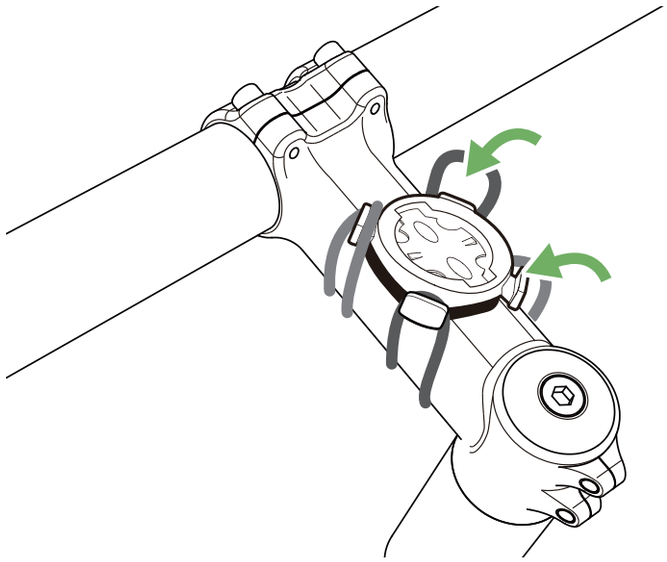

3

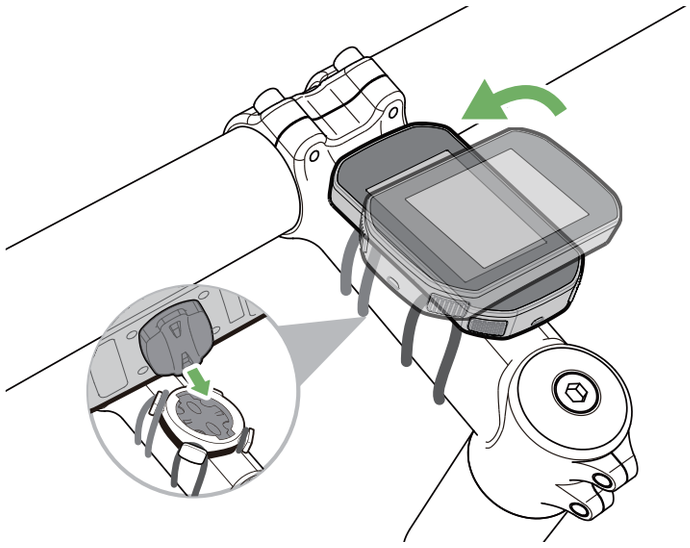

4

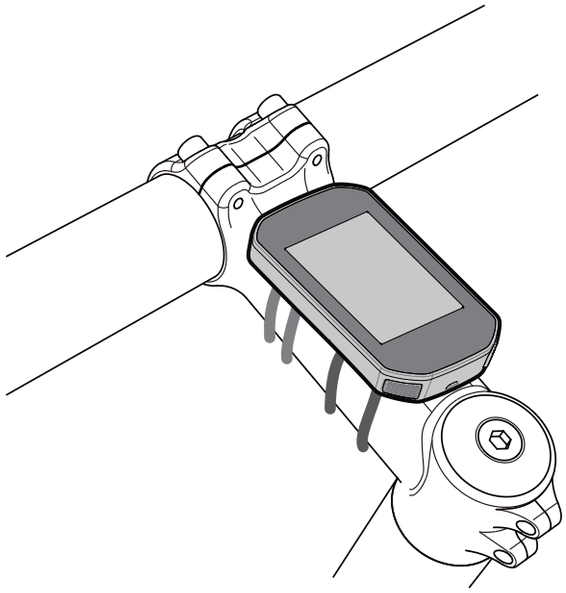

RF Exposure Information (MPE)

This device meets the EU requirements and the International Commission on Non-Ionizing Radiation Protection (ICNIRP) on the limitation of exposure of the general public to electromagnetic fields by way of health protection. To comply with the RF exposure requirements, this equipment must be operated in a minimum of 20 cm separation distance to the user.

Hereby, Bryton Inc. declares that the radio equipment type Bryton product is in compliance with Directive 2014/53/EU. The full text of the EU declaration of conformity is available at the following internet address: http://www.brytonsport.com/download/Docs/CeDocs_Rider420.pdf

Designed by Bryton Inc.
Copyright © 2018 Bryton Inc. All rights reserved.
7F, No.75, Zhouzi St., Neihu Dist., Taipei City 114, Taiwan (R.O.C.)

The content of this manual is subject to change without prior notice.

Federal Communication Commission Interference Statement

This equipment has been tested and found to comply with the limits for a Class B digital device, pursuant to Part 15 of the FCC Rules. These limits are designed to provide reasonable protection against harmful interference in a residential installation.

This equipment generates, uses and can radiate radio frequency energy and, if not installed and used in accordance with the instructions, may cause harmful interference to radio communications. However, there is no guarantee that interference will not occur in a particular installation. If this equipment does cause harmful interference to radio or television reception, which can be determined by turning the equipment off and on, the user is encouraged to try to correct the interference by one of the following measures:

. Reorient or relocate the receiving antenna.
. Increase the separation between the equipment and receiver.
. Connect the equipment into an outlet on a circuit different from that to which the receiver is connected.
. Consult the dealer or an experienced radio/TV technician for help.

FCC Caution: To assure continued compliance, any changes or modifications not expressly approved by the party responsible for compliance could void the user's authority to operate this equipment. (Example - use only shielded interface cables when connecting to computer or peripheral devices).

FCC Radiation Exposure Statement

This equipment complies with FCC RF radiation exposure limits set forth for an uncontrolled environment. This equipment should be installed and operated with a minimum distance of 20 centimeters between the radiator and your body.

This transmitter must not be co-located or operating in conjunction with any other antenna or transmitter.

The antennas used for this transmitter must be installed to provide a separation distance of at least 20 cm from all persons and must not be co-located or operating in conjunction with any other antenna or transmitter.

This device complies with Part 15 of the FCC Rules. Operation is subject to the following two conditions:

(1) This device may not cause harmful interference, and (2) This device must accept any interference received, including interference that may cause undesired operation.

Industry Canada Statement

This device complies with Industry Canada RSS-247 standard. Operation is subject to the following two conditions: (1) this device may not cause interference, and (2) this device must accept any interference, including interference that may cause undesired operation of the device.

Le présent appareil est conforme aux CNR d'Industrie Canada applicables aux appareils radio exempts de licence. L'exploitation est autorisée aux deux conditions suivantes : (1) l'appareil ne doit pas produire de brouillage, et (2) l'utilisateur de l'appareil doit accepter tout brouillage radioélectrique subi, même si le brouillage est susceptible d'en compromettre le fonctionnement.

IC Radiation Exposure Statement:

This equipment complies with IC RSS-102 radiation exposure limit set forth for an uncontrolled environment. This equipment should be installed and operated with minimum distance 0.5 cm between the radiator and your body.

Cet équipement est conforme aux CNR-102 d'Industrie Canada. Cet équipement doit êtreinstallé et utilisé avec une distance minimale de 0.5 centimètres entre le radiateur et votrecorps. Cet émetteur ne doit pas être co-localisées ou opérant en conjonction avec autreantenne ou émetteur. Les antennes utilisées pour cet émetteur doivent être installés etfournir une distance de séparation d'au moins 0.5 centimètre de toute personne et doit pas être co-située ni fonctionner en conjonction avec une autre antenne ou émetteur.