SAFETY PRECAUTIONS

⚠ SAFETY PRECAUTIONS

THIS MODEL IS ONLY SUITABLE FOR PEOPLE 14 YEARS OLD AND UP.
THIS RADIO CONTROL MODEL IS NOT A TOY.

Beginner should seek advice from experienced person in order to assemble the model or parts correctly and to make best performance.

* Assemble this model or parts only in place out of children's reach, and take safe precautions before operating this model. User is fully responsible for the model assembly and safe operations.

Introduction

This is a sophisticated hobby product and not a toy. It must be operated with caution and common sense. User also requires some basic mechanical abilities. Fail to operate this product in a safe and responsible manner could result in injury or do damage to the product or other properties. This product is not intended for use by children without direct adult supervision. The product manual contains instructions for safe operation and maintenance. It is essential to read and follow all the instructions and warnings in the manual prior to assembly, setup or use, in order to operate correctly and avoid damage or injury.

Safety, Precautions, and Warnings

As the user of this product, you are solely responsible for operating it in a manner that does not endanger yourself and others or result in damage to the product or the property of others.

This model is controlled by a radio signal that is subject to interference from many sources outside your control. This interference can cause momentary loss of control so it is necessary to always keep a safe distance in all directions around your model, as this will help to avoid collisions or injury.

- Always operate your model in an open area away from cars, traffic, or people.
- Avoid operating your model on the street where injury or damage can occur.
- Never operate the model out into the street or populated areas for any reason.
- Never operate your model with low transmitter batteries.
- Carefully follow the directions and warnings for this product and any optional support equipments (chargers, rechargeable battery packs, etc.) that you use.
- Keep all chemicals, small parts and anything electrical out of the reach of children.
- Moisture causes damage to electronics. Avoid water exposure to all equipments not specifically designed and protected for this purpose.

CE Compliance Information For The European Union

The associated regulatory agencies of the following countries recognize the noted certifications for this product as authorized for sale and use.

UK	DE	DK	BG	SE	CZ	ES	NL	SK	HU	RO	FR	PT
FI	EE	LV	LT	PL	AT	CY	SI	GR	MT	IT	IE	LU

Declaration of Conformity
Products: Carisma CTX-8000 2.4GHz Transmitter, MRX2800 Receiver
Equipment Class: 2
The objects of declaration described above are in conformity with the requirements of the specifications listed below.

Item Name : Carisma CTX-8000 2.4GHz Transmitter and MRX2800 Receiver
EN 301 489-1 V1.9.2
EN 301 489-17 V2.2.1
ETSI EN 300 328 V1.8.1

Directive 1999/5/EC (R&TTE)
Article 3.1a Health
Article 3.1b EMC
Article 3.2 Radio Spectrum

FCC ID YDTCTX-8000JP

Statement - This device complies with Part 15 of the FCC Rules.
Operation is subject to the following two conditions:
(1) this device may not cause harmful interference, and
(2) this device must accept any interference received, including interference that may cause undesired operation.

Changes or modifications not expressly approved by the party responsible for compliance could void the user's authority to operate the equipment.

RF Exposure Warning:
This equipment complies with FCC radiation exposure limits set forth for an uncontrolled environment.
And should be operated with minimum distance of 20 cm between the antenna & your body.

Manufactured By : Mun Ah Plastic Electronic Toys Company.,Ltd

Instructions for Disposal of WEEE by Users in the European Union

This product must never be thrown away with other waste. Thus the users are liable for disposing the wasted model by submitting them to designated collection stations specific for recycling electronic and electric items. Disposing of the wasted model in this way is helpful to conserve natural resources and enable to keep human health and protect the environment. For more information about wasted model disposal and recycling, please contact your local city office, your disposal service or where you purchased the product.

E328

FOR TRANSMITTER

x 4

Heavy Duty
1.5V "AA" Size Batteries
(INCLUDED)

⚠ ATTENTION

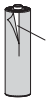

Damages or Leaking. Do not use damaged batteries.

Carisma CTX-8000 2.4GHz FHSS Technology System

The following is an overview of the various functions and adjustments found on CTX-8000 radio system for Carisma models. It is important to read and understand about all of these functions and adjustments before driving.

Power ON / OFF the Transmitter

The Transmitter CTX-8000

Steering Wheel : Control direction (Left / Right) of the RC model.
Throttle Trigger : Control speed (Forward/Brake/Backward) of the driving model.
Antenna : Transmit signal to the model.
Power ON / OFF : Power ON / OFF the transmitter
SYNC & Battery Indicator : Green LED light indicates synchronization status and/or adequate battery power supply. Red LED light indicates low battery
Dual Rate Dial : Adjust the same maximum steering angle on both sides when model turns Left / Right
ST. Trim Dial : Adjust the neutral position of steering servo when model wheels are straight ahead.
TH. Trim Dial : Make sure the model stays still when releasing the throttle trigger.
Battery Compartment Tray : Cover and hold the batteries powering the transmitter.

* In general, user will experience under steer when making a wide turn at high speed or over steer when making sharp turn at high speed (easy to spin out). User should practice the throttle and steering approach for different cornering at different speed or road surface.

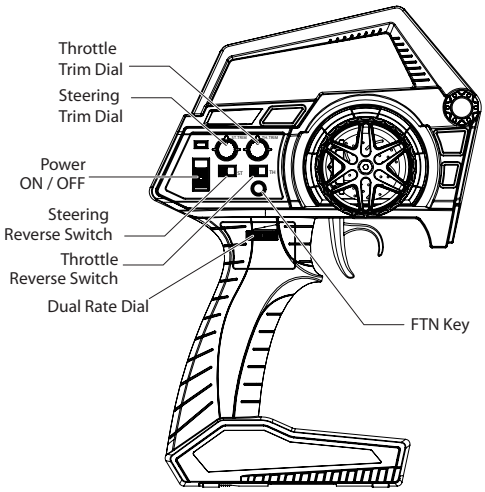

CTX-8000

Battery Installation

Supplied with 4 x 1.5V AA Batteries, CTX-8000 can be operated a few hours. Installation: Remove the battery compartment cover as shown below.

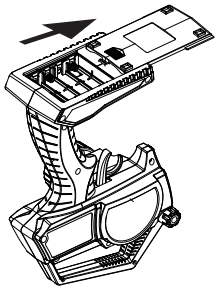

Install the batteries observing the polarity marked on battery compartment.

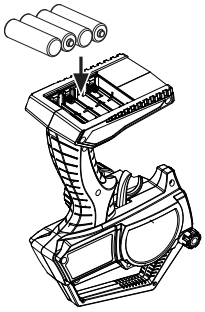

Then reinstall the battery compartment cover as the Picture shown below.

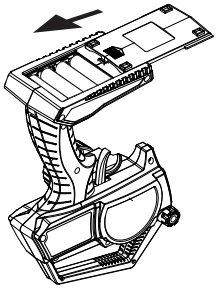

Warning : Never disassemble batteries or put the batteries in fire, chemical agents, otherwise they may cause personal injuries or property damages.
Battery Disposal : Observe corresponding regulations about wasted battery treatment regulations.

1. After running out of power, dispose of wasted batteries in designated areas far away from water supply, household areas and planted areas.
2. Submit the wasted batteries to specific recycling stations.

Battery LED Indicator

The LED indicator located on the front left side of the transmitter indicates the power supply of batteries. The green LED will go solid on indicating that the batteries have sufficient power. When batteries voltage drops below 3.8 volts, the Red LED will be flashing slowly, indicating the batteries power is low and should be replaced.

Solid Green :
Sufficient Power supply

Red LED Flashing:
Time to replace batteries

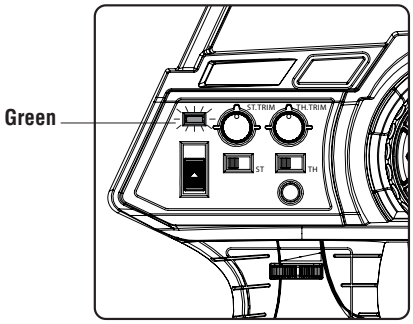

Pre-Run Check

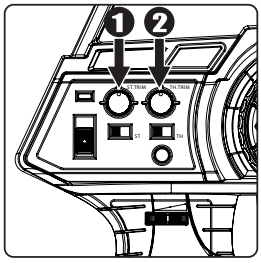

1. Steering : Adjust the steering trim to keep the front wheels in straight line when steering wheel remains in NEUTRAL position.

2. Throttle : Adjust the throttle trim to ensure the rear wheels stop rotating when throttle trigger remains in NEUTRAL position.

* Always turn on the transmitter first (except doing synchronizing) by sliding the switch on the left side from bottom to top. The green lights above the switch should light up. If not, you need to check for low or incorrectly installed batteries.

For Transmitter

x 4

Heavy Duty
1.5V "AA" Size Batteries

ATTENTION

Damages or Leaking
Do not use any damaged batteries.

Instructions for Disposal of WEEE by Users in the European Union

This product must never be thrown away with other waste. Thus the users are liable for disposing the wasted model by submitting them to designated collection stations specific for recycling electronic and electric items. Disposing of the wasted model in this way is helpful to conserve natural resources and enable to keep human health and protect the environment. For more information about wasted model disposal and recycling, please contact your local city office, your disposal service or where you purchased the product.

Top Control Panel

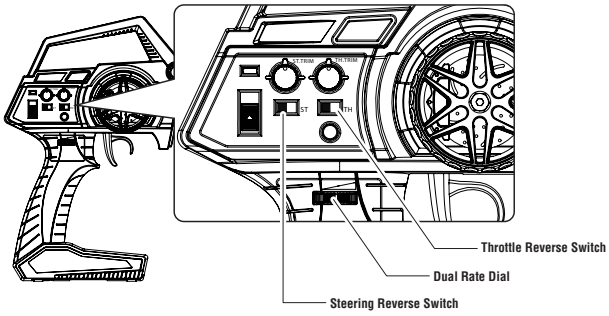

Dual Rate Dial

Dual Rate Dial enables to adjust the same maximum steering angle of servo on both sides (Left and Right) when model makes steering. The Dual Rate Dial affects the sensitivity of servo. Reducing dual rate value can lower the sensitivity of servo and reduce the same maximum steering angle on both sides. Remember to adjust the dual rate value within the adjustment range.

Reversing

Reversing is used to change the response direction of steering wheel and throttle trigger. CTX-8000 Transmitter features 2 reversing functions: Steering Reverse and Throttle Reverse.
Steering Reverse: Reverse the response direction when operating steering wheel. Turning left steering wheel, the model turns right while turning right the model turns left.
Throttle Reverse: Reverse the response direction when operating throttle trigger. Pushing forward throttle trigger the model moves backward while pulling back, the model moves forward. If necessary you can just use a small screwdriver to adjust the corresponding switches.

Trimming

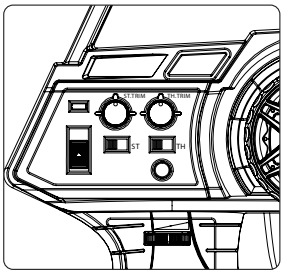

CTX-8000 features two trimming functions:
Steering Trim and Throttle Trim.
Steering Trim Dial :
Adjust the neutral position of steering servo when the wheels are straight ahead. Normally steering trim is adjusted until the model can keep straight tracks.
Throttle Trim Dial :
Adjust the throttle trim to ensure the rear wheels stop rotating when throttle trigger remains in NEUTRAL position.

RECEIVER CONNECTION AND INSTALLATION

Carisma 2.4GHz Receiver MRX2800

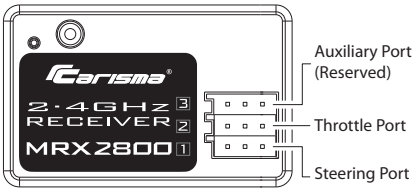

Auxiliary Port (Reserved)
Steering Port : Where to plug in the servos.
Throttle Port : Where to plug in the Electronic Speed Controler (ESC).
Setup button : Synchronize transmitter and receiver. Select frame rate.

Tips :
- Wrap the receiver with something soft, such as foam rubber, to avoid vibration. If there is a chance of getting wet, put the receiver in a waterproof bag or balloon.

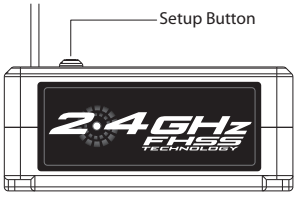

Warning :
- Never bend the metal pins on the PCB of receiver.
- Never cut the antenna cable.
- Install the antenna vertically as shown in the figure.
- Keep the antenna as far away from the motor, ESC and other noise sources as you possibly can.

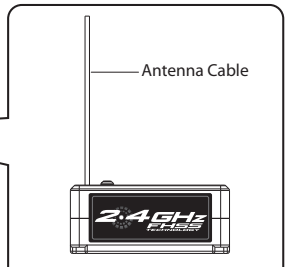

Install the antenna vertically to the ground.

Remarks :
The mounting positions of receiver and antenna cable greatly affect the operating range.

Synchronization & Frame Rate Adjust

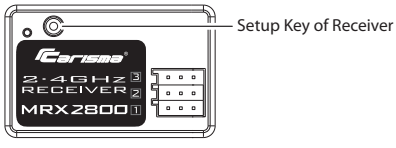
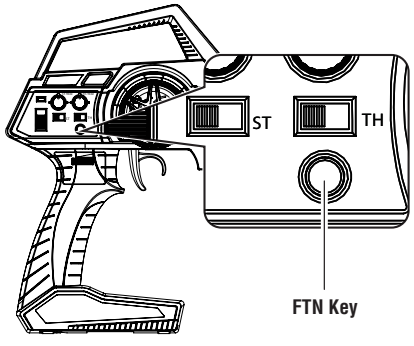
1. Prior to any operation make sure the transmitter and receiver are both turned off.
2. Press and hold the setup button on the receiver while power on the receiver.
3. Release the setup button till green LED flashes.
4. Press the setup button to select the frame rate with green LED flashing.
   Faster Flashing = High frame rate (7ms) for digital servo
   Slower Flashing = Low frame rate (15ms)for analogue servo
5. Power on the transmitter. With the transmitter steering wheel and throttle trigger in neutral position (full stop and straight steering), press the FTN Key of the transmitter.
6. When synchronization is done, the green LED on both receiver and transmitter will turn solid on.