Chromebox Mini

Commercial Computing Device

Model : ME4100

User Guide

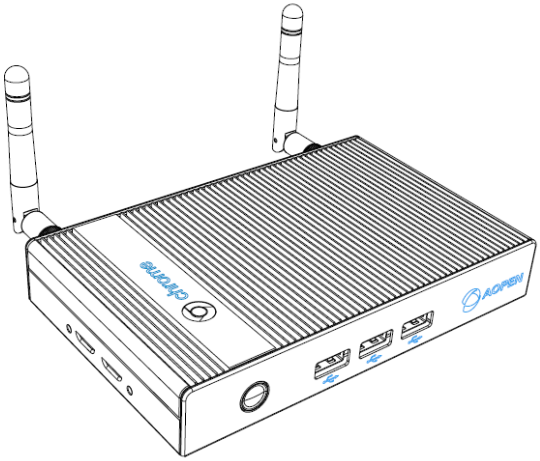

chromebox

Table of Contents

Disposal Instructions 4
Copyright 8
Disclaimer 8
1. Safety Instructions 9
ENERGY STAR Certification..... 10
Risk of Overheating 11
2. Packing List 12
2-1. Standard Accessories 12
2-2. Optional Accessories 13
3. Product Introduction 14
3-1. Getting started 14
3-2. External View 16
3-3. Dimensions 18
3-4. Knowing Your Chromebox Mini….....19
3-5. Connection Diagram 25
4. Declaration 22
5. Contact Information 27
6. Chrome Care 28

Disposal Instruction (US)

For conservation purposes, please do not throw this electronic device into the municipal trash bin when discarding.

To minimize pollution of our environment, please recycle this product. For more information about the collection and recycling of Waste Electrical and Electronic Equipment (WEEE), you are invited to visit our homepage at www.aopen.com under "Green Products"

廃棄上の指示

より良い地球保護のために、電子機器を廃棄処分にする時は、ゴミ箱に捨てないで下さい。汚染を最小限に抑え、地球環境の最大限の保護のために、製品をリサイクルして下さい。 廃電気電子機器 (WEEE) の回収とリサイクルについての情報は、弊社ホームページ www.aopen.com の "Green Products" （環境に優しい製品）をご覧下さい。

廢棄及回收處理

為了保護環境，請勿將本產品當作一般廢棄物處理。為減少環境污染，維護地球資源，本產品報廢時，請回收本產品。

有關收集和回收廢棄電子電氣設備（WEEE）的更多信息，請參考我們的網頁 www.aopen.com "綠色產品" 的資訊。

Instruktion til bortskaffelse (Danish)

Af hensyn til vores miljø bedes De ikke bortskaffe denne elektroniske enhed i en almindelig affaldsspand. For at mindske forurening og sikre beskyttelse af miljøet bedes De genbruge produktet. For yderligere information vedrørende indsamling og genbrug af elektronik-affald (Waste Electrical and Electronic Equipment (WEEE)) er De velkommen til at besøge vores website www.aopen.com og læse nærmere under "Green Products".

Verwijderingsinstructie (Dutch)

Om mogelijke schade aan het milieu of de menselijke gezondheid door ongecontroleerde afvalverwijdering te voorkomen, moet u dit elektronisch product scheiden van andere soorten afval en op een verantwoorde manier recyclen. Verwijder dit product dan ook alstublieft niet samen met ander huishoudelijk afval. Voor meer informatie over de verzameling en recycling van elektrisch afval en elektronische apparatuur (WEEE), nodigen we u uit om onze homepage te bezoeken www.aopen.com onder "Green Products".

Instruction de Disposition (French)

Pour une meilleure protection de la terre, ne jetez pas ce dispositif électronique dans la poubelle municipale lors de la disposition. Pour éliminer la pollution et assurer la plus grande protection de l'environnement global, réutilisez s' il vous plaît le produit. Pour plus d'informations sur la gestion des déchets d' Equipements Electriques et Electroniques (DEEE ou WEEE), vous êtes invité à visiter notre site à www.aopen.com sous " Green Products".

Entsorgungsanleitung (German)

Zum besseren Schutze unseres Planeten, schmeissen Sie elektrische Geräte bitte nicht in öffentliche Mülleimer. Zur Verringerung der Verschmutzung und zur Sicherstellung grösstmöglichen Schutzes der Umwelt recyceln Sie bitte das Produkt. Für mehr Informationen zum Sammeln und Recyceln von elektrischen und elektronischen Müll (WEEE) besuchen Sie bitte unsere Homepage unter www.aopen.com unter dem Punkt "Green Products".

Istruzioni per lo smaltimento (Italian)

Per una migliore salvaguardia del nostro pianeta, si prega di non gettare questo dispositivo elettronico nei normali rifiuti al momento dell'eliminazione. Per ridurre al minimo l'inquinamento ed assicurare la massima protezione dell'ambiente, si prega di riciclare il prodotto. Per maggiori informazioni riguardanti la raccolta ed il riciclaggio delle apparecchiature elettriche ed elettroniche residue (WEEE), siete invitati a visitare la nostra homepage www.aopen.com alla voce "Green Products".

Instruksjoner for Resirkulering og Oppsamling (Norweigian)

For Í beskytte vÍr planet, kast ikke dette elektroniske utstyret sammen med vanlig avfall. For Í beskytte vÍr natur og miljř, vennligst resirkuler dette produktet. For mer informasjon om oppsamling og resirkulering i henhold til Waste Electrical and Electronic Equipment (WEEE), se vÍr hjemmeside pÍ www.aopen.com under "Green Products".

REEE - Programa de Tratamento de Resíduos de Equipamentos Eléctricos e Electrónicos (Portugese)

Para melhor protecção ambiental do nosso planeta terra, não coloque o dispositivo electrónico no receptáculo de lixo municipal. Para minimizar a poluição e garantir protecção máxima do ambiente global, recicle o produto. Para mais informações sobre acerca da recolha e reciclagem de Equipamento Eléctrico e Electrónico (WEEE), convidamos-lhe a visitar nossa página na Internet em www.aopen.com sobre "Green Products".

Instrucciones para depositar los productos electrónicos (Spanish)

Para proteger mejor el medio ambiente, por favor, no deposite los productos electrónicos en los contenedores de basura tradicionales. Para reducir la contaminación y proteger el medio ambiente se recomienda que los recicle. Para más información acerca de dónde depositar y cómo reciclar Equipos Electrónicos y Desperdicios Electrónicos (WEEE), por favor, visite la página web www.aopen.com entre en la sección Productos Ecológicos ("Green Products").

Kassering (Swedish)

För att bättre värna om vår jord bör denna elektroniska utrustning ej kasseras tillsammans med vanligt avfall. För att minimera mängden föroreningar och så långt som möjligt skydda den globala miljön bör produkten återvinnas. För vidare information om insamling och återvinning av uttjänta elektriska och elektroniska produkter (Waste Electrical and Electronic Equipment, WEEE), besök avsnittet "Green Products" på vår hemsida, www.aopen.com.

Copyright

Copyright of this publication belongs to AOPEN Inc. AOPEN reserves the right to change the content of this publication without obligation to notify any party of such changes or revisions. No part of this publication may be reproduced, transcribed, transmitted, translated into any language, and stored in a retrieval system in any form or by any means electronically, mechanically, optically without the prior written permission of AOPEN Inc.

Disclaimer

AOPEN makes no warranties or representations, either expressed or implied, with respect to the content herein and specifically disclaims any warranties, merchantability of fitness for any particular purpose.

AOPEN and AOPEN logos used herein are registered trademarks of AOPEN Inc.
All other brand names and trademarks are owned by their respective owners.

Copyright © 2016 by AOPEN Inc.

All rights reserved.

Chrome, Chromebox and Chromebase are

Registered trademarks of Google Inc.

1. Safety Instructions

1. Please read these safety instructions carefully.
2. Please keep this User's Manual for reference.
3. Please disconnect this equipment from its power source before cleaning. Do not use liquid or sprayed detergent for cleaning. Use a lightly moistened sheet or cloth for cleaning.
4. Make sure the equipment is connected to the power source with the correct voltage, frequency and amperage.
5. All cautions and warnings on the equipment should be noted and followed.
6. Never pour any liquid into any opening of this equipment; this could cause fire or electrical shock.
7. Never disassemble the equipment. For safety reasons, the equipment should only be handled by qualified service personnel.
8. If one of the following situations arises, get the equipment checked by qualified service personnel:

a. Liquid has penetrated the equipment.
b. The equipment has been exposed to moisture.
c. The equipment has not worked well or you cannot get it to work according to user's manual.
d. The equipment has been dropped and damaged.
e. The equipment has obvious signs of breakage.

9. Caution on use of battery: Use the battery recommended by the manufacturer or the same type of battery installed by the manufacturer. If the incorrect battery is used, it may cause an explosion or can present a fire hazard. Recycle or discard used batteries according the manufacturer's instruction or your local authority.

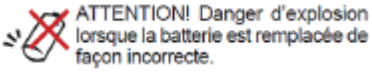

10. Ambient operating temperature for this equipment is: 0~ 40 degrees Celsius. (32~104 degrees Fahrenheit)
11. Wall Mounting Holder needs to be an UL 1678 approved product.

ENERGY STAR Certification

ENERGY STAR is a U.S. Environmental Protection Agency voluntary program that helps businesses and individuals save money and protect our climate through superior energy efficiency. AOPEN products that have the ENERGY STAR logo complies with the ENERGY STAR standard.

The monitor and computer are automatically set to sleep after 8 and 30 minutes of user inactivity. To restart your device after sleep mode, click the mouse, press any key on the keyboard or touch screen.

Additional information on the potential energy and financial savings of the power management feature can be found on the EPA ENERGY STAR Power Management website at http://www.energystar.gov/powermanagement.

Additional information on the ENERGY STAR program and its environmental benefits are available on the EPA ENERGY STAR Web site at http://www.energystar.gov.

Risk of Overheating!

a. Do not install Chromebox mini in an enclosed space.

b. Be sure the heat sink that is on the top and both side of the Chromebox mini has at least 5cm of clear space for heat dissipation.

c. Do not place any objects on the top side of the Chromebox mini.

d. Do not use Chromebox mini when the ambient temperature is higher than 40℃.

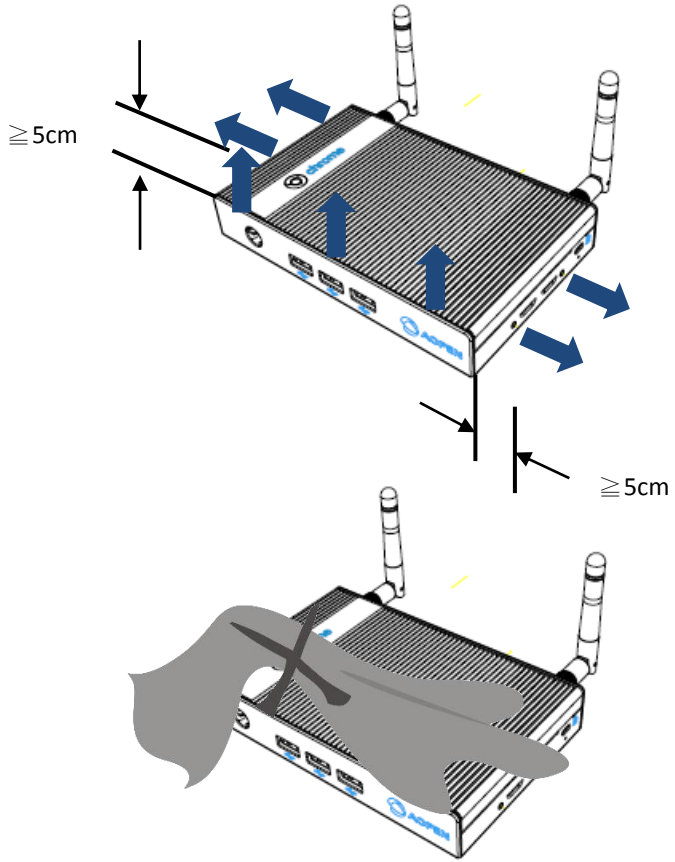

2. Packing List

2-1. Standard Accessories

a. Chromebox mini ME4100 x 1
b. Power adapter (40W / 19V) x 1
c. Power cord x 1
d. Dual Band Antenna x 2
e. DC-in jack holder x 1
f. User Manual x 1
g. Warranty Card x 1

a.

b.

c.

d.

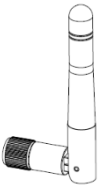

e.

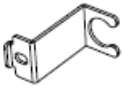

f. g.

Note:
Please note that the images are for visual representation purposes only and may differ from the actual product

2-2. Optional Accessories

a. PoE Splitter (IEEE **802.3at Type 2 "PoE+")**

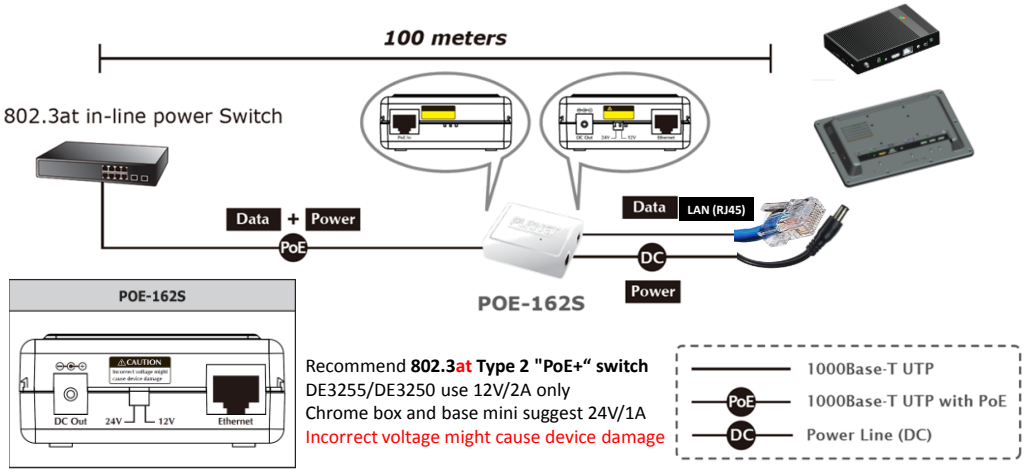

b. Desktop Footstand Kit

c. Wall Mounting KIT

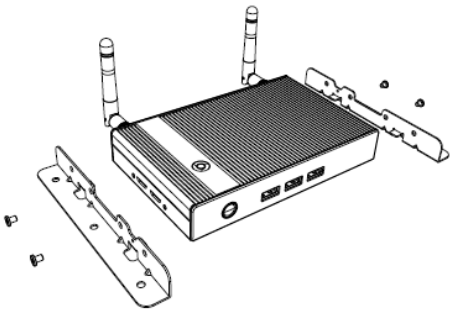

3. Product Introduction

3-1 Getting started

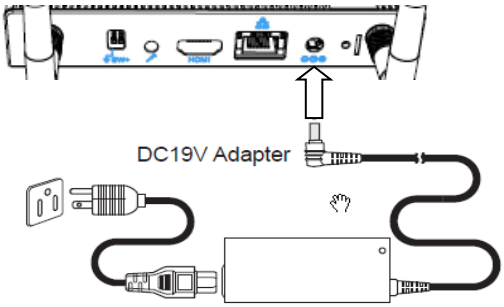

- Connect the AC power cord to your AC power adapter
- Plug the AC power cord into a 100 V~240 V power source.
- Connect the DC plug into your Chromebox Mini (DC) input port.

Caution:

When you install devices or cables, please ensure that DC plug is removed prior to plugging in powered devices.

IMPORTANT!

• Only use the recommended adapter and cable that came with your Chromebox Mini.

• We strongly recommend that you use a grounded wall socket while using your Chromebox Mini.

• The socket outlet must be easily accessible and near your Chromebox Mini.

• To disconnect your Chromebox Mini from its main power supply, unplug your device from the power socket.

NOTE:

Power adapter information:

- Input voltage: 100-240 Vac
- Input frequency: 50-60 Hz
- Rating output current: 2.1A (40 W)
- Rating output voltage: 19 V

WARNING!
The power adapter may become hot when in use. Do not cover the adapter and keep it away from your body.

3-2. External View

Front View

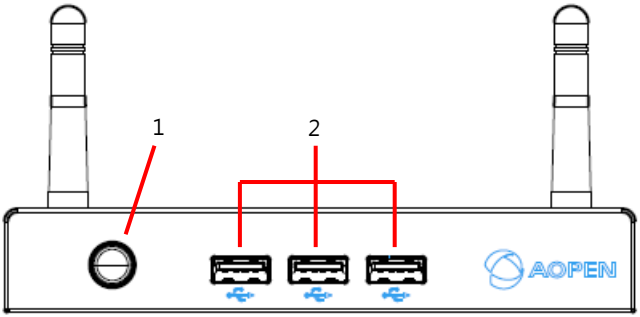

1. Power Button w/ LED indicator
2. USB 2.0 w/ BC1.2, each port supports 5V/1.5A

Side View

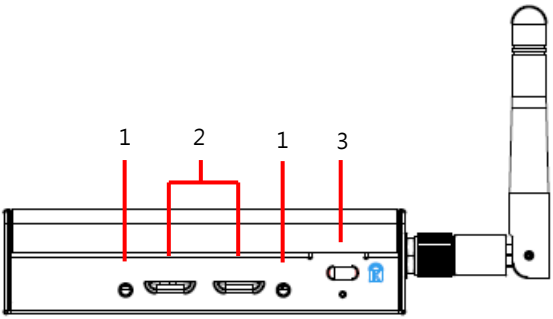

1. Wall Mounting Kit Screw Hole
2. Thermal Venting Hole
3. Kensington Lock

Rear View

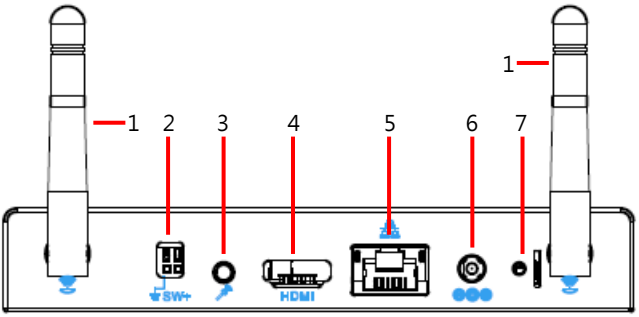

1. Dual Band Wifi + BT Antenna
2. External Power Switch
3. Audio Combo Jack
4. HDMI
5. RJ45 Ethernet
6. DC-In
7. DC-In Jack Holder Screw Hole

3-3. Dimensions

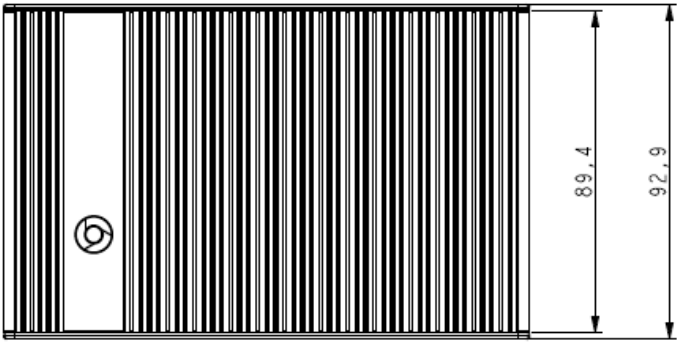

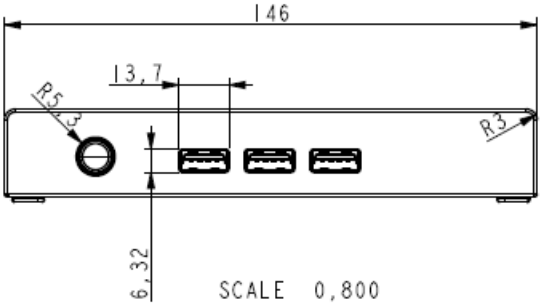

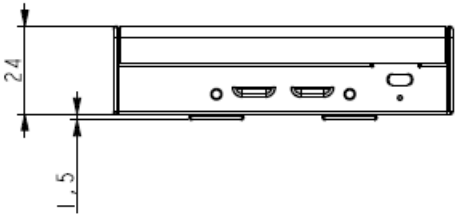

3-4. Knowing Your Chromebox Mini

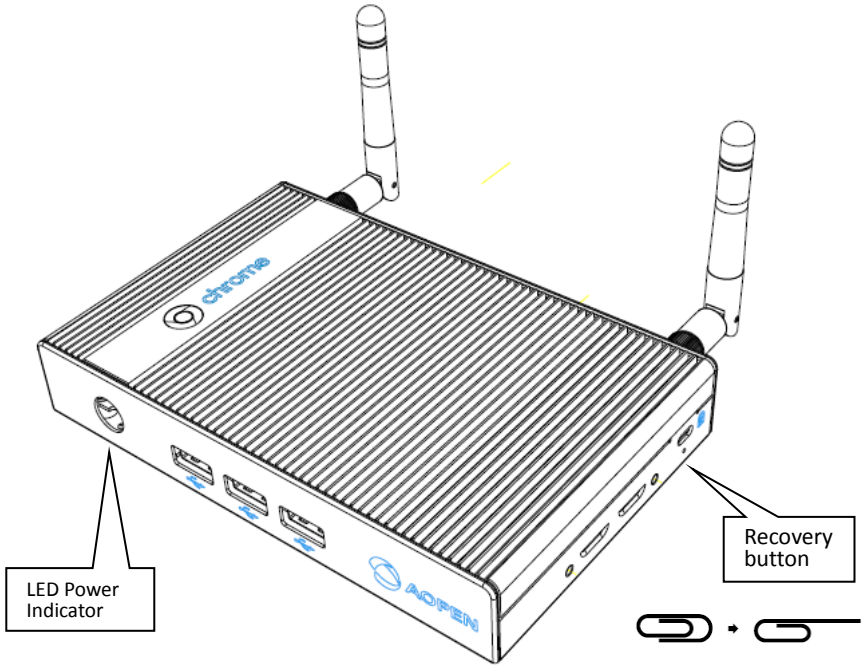

Power Button

The power button allows you to turn the Chromebox Mini on or off. You can use the power button to put your Chromebox Mini to sleep mode or hold the clip in the power button for four (4) seconds to force shutdown the device. To power on, hold the clip in the power button for 0.6 to 1 second.

IMPORTANT!

Forcing the system to restart may result in data loss. We strongly recommend that you back up your data regularly.

Recovery button

If you need to invoke the Chromebox Mini into Recovery mode, you can insert a paper clip and press the RECOVERY BUTTON and press the Power button. Release the RECOVERY BUTTON after a second.

IMPORTANT!

Performing a recovery on your Chromebox Mini reinstalls the operating system and restores the original factory settings, removing all associated Google Accounts (including the owner) and clearing all local data from the hard drive. Locally saved files and saved networks are deleted for all accounts. The Google Accounts themselves, and any data synced to the web through your Google Drive, are not affected by a system recovery.

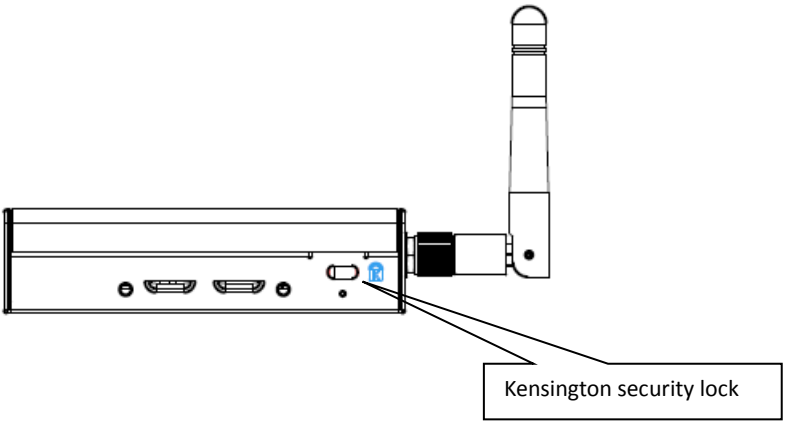

Kensington security Lock

The Kensington security slot allows you to secure your Chromebox Mini by using Kensington® security products.

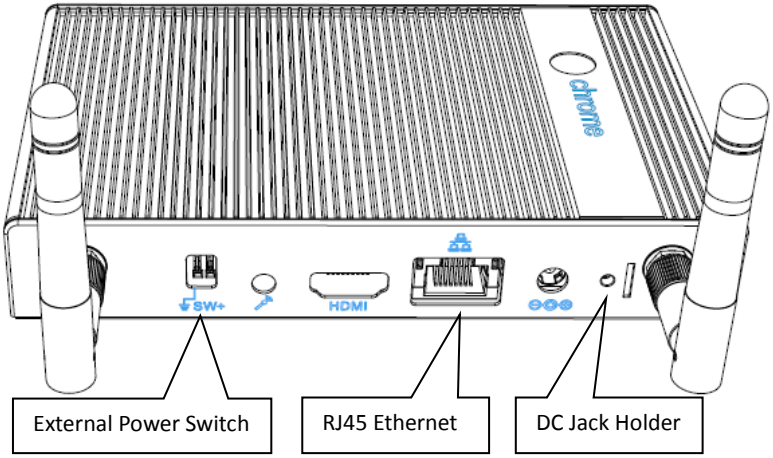

Ethernet Wake on LAN (WOL)

The WOL function on Chrombox Mini thru Ethernet RJ45 connector is enabled by default for Sleep Mode, when the system is operating on AC mains power. (S5 power off not supported)

If you need to disable the WOL function on the Chromebox Mini, Please follow below procudures :

1. Log in to chrome OS and press **Ctrl** + **Alt** + **T** to enter the Chrome OS command mode.
2. Key-in below command to disable WOL. To use this function, turn Verification Off (Developer Mode).

crosh > **shell**
chronos@localhost / $ **sudo su**
Localhost / # **set_wake_on_lan false**

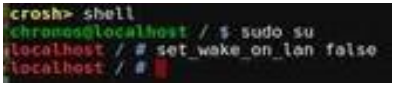

Note : The default WOL function will be restored after reboot.

External Power Switch

External power switch at rear of Chromebox Mini allows you to extend the power switch by your demand, and you can decide your own switch specification and cable length just follow the wire gauge and strip length.

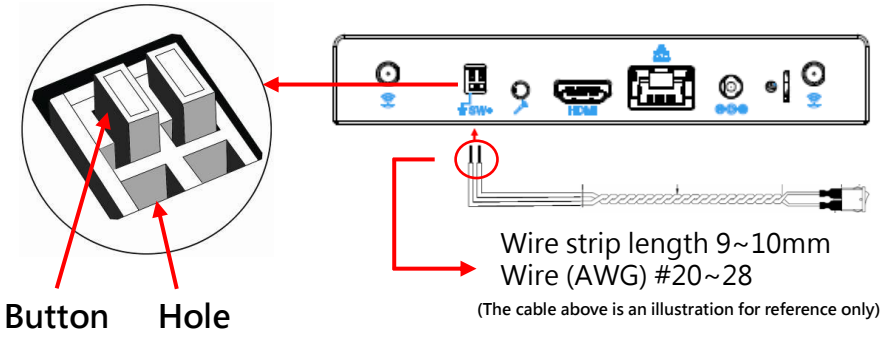

The external power switch head is a screwless type spring clamp pluggable terminal block, you can insert a wire by press the button on the terminal, please refer to the procedure below.

Step 1 Please prepare a pin or rod that hard enough for pushing the button on the terminal block

Step 2 Push the button in the end and hold it

Step 3 Insert the wire into the hole and make sure the stripped portion is fully inserted

Step 4 Release the pin or rod then the wire will clamp by the terminal block

Step1 **Step2** **Step3** **Step4**

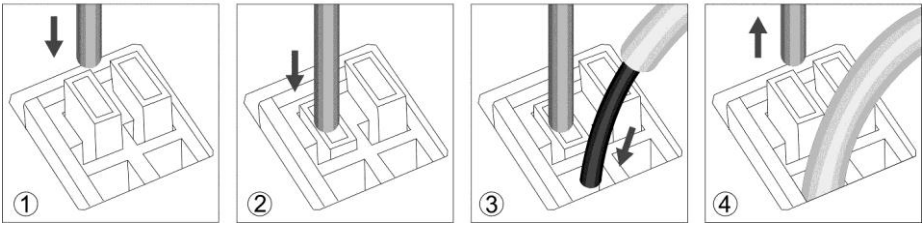

DC-In Jack Holder

The DC-In jack holder allows you to fix the DC-in jack firmly on the Chromebox Mini, for various environment and location where the Chromexbox mini be used, to prevent the DC-in from falling off and cause any in convenient, data loss or damage to Chromebox Mini system itself.

3-5. Connection Diagram

Front

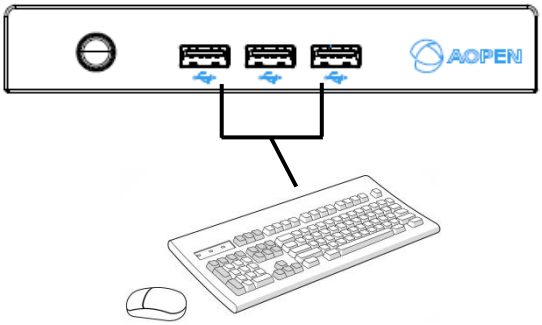

Rear

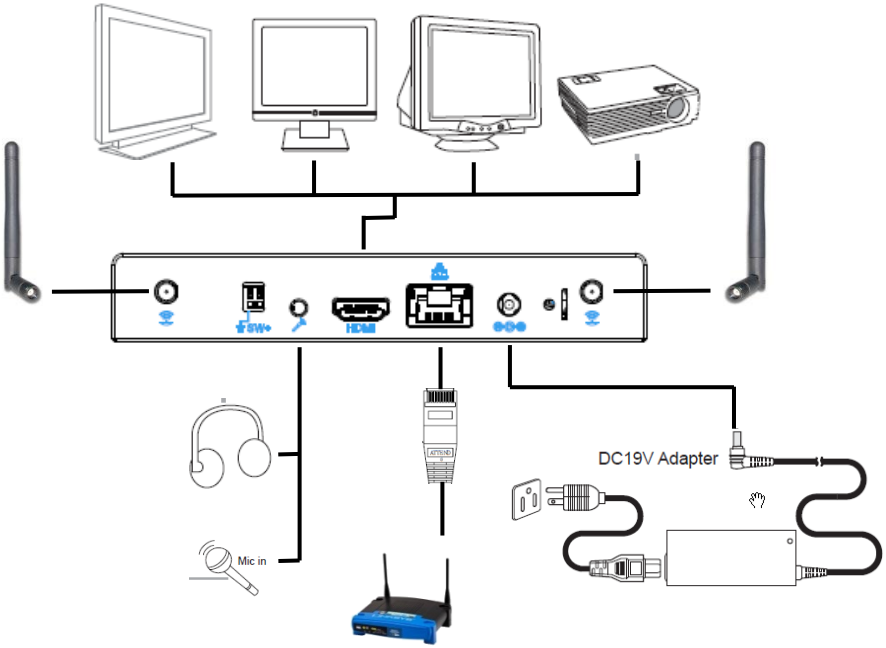

4. Declaration

Declaration of Conformity

This device complies with Part 15 of the FCC Rules. Operation is subject to the following two conditions: (1) this device may not cause harmful interference, and (2) this device must accept any interference received, including interference that may cause undesired operation.

Responsible Party Name:	AOPEN Inc.
Address:	5F., No.15, Ln. 128, Sinhu 1st Rd., Neihu District, Taipei City 114, Taiwan R.O.C.
Phone/Fax No:	+886-2-7710-1195/+886-2-7710-1187
Product Name:	Chromebase Mini
Model Name:	WT10M-FRG

We, AOPEN Inc., hereby declare that the above product and model was tested conforming to the applicable FCC Rules.

Signature: Ted Tsai Date: 6/25/2015

Print Name: Ted Tsai

Title: G.M. of DDS Unit

Declaration of Conformity

We,

AOPEN Inc.
5F., No.15, Ln. 128, Sinhu 1st Rd., Neihu District, Taipei City 114, Taiwan R.O.C.

Declares under our sole responsibility that the product:

Product Name: Chromebase Mini
Model Name: WT10M-FRG

To which this declaration relates is in conformity with the following standards or other normative documents:

EN300328 V1.8.1
EN301489-1 V1.9.2/-17 V2.2.1
EN301893 V1.7.1
EN55022:2010+AC:2011 Class B
EN55024:2010
EN61000-3-2:2006+A1:2009+A2:2009；EN61000-3-3:2013
EN61000-4-2:2009/-3:2006+A1:2008+A2:2010/-4:2012/-5:2006/-6:2014
/-8:2010/-11:2004
EN60950-1:2006+A11:2009+A1:2010+A12:2011+A2:2013
Regulation (EC) No. 617/2013

We, AOPEN Inc., hereby declare that the above product and model was tested conforming to the applicable Rules of EMC Directive 2004/108/EC, Low Voltage Directive 2006/95/EC, R&TTE Directive 1995/5/EC, RoHS Directive 2011/65/EU and Directive 2009/125/EC for energy-related product.

Year to begin affixing CE marking 2015

CE

Signature: Ted Tsai Date: 5/25/2015
Print Name: Ted Tsai
Title: G.M. of DDS Unit

5. Contact Information

AOPEN America
AOPEN America Inc.
2150 N. First Street, Ste. 300, San Jose, CA 95131
USA
Telephone: (+1) 408-586-1201

AOPEN Australia anhd New Zealand
AOPEN ANZ
AOPEN Australia & New Zealand
Level 1, 572 -574 Swan Street
Richmond VIC 3121, Australia.
Telephone: (+61) 3 9427 7379

AOPEN Europe
AOPEN Computer BV
Stadionlaan 151-153
5246 JT Rosmalen
The Netherlands
Telephone: (+31) 73 646 6400

AOPEN Japan
AOPEN Japan Corp.
3F, Daiichi-denpa Bldg, 2-4-4, Sotokanda,
Chiyoda-ku, Tokyo 101-0021
Japan
Telephone: (+81) 3 5298 1668

AOPEN Inc.
AOPEN Inc.
5F., No.15, Ln. 128, Sinhu 1st Rd., Neihu District,
Taipei City 114,
Taiwan (R.O.C.)
Telephone: (+886) 2 7710 1195

AOPEN Taiwan
AOPEN Great Connection Corporation
5F., No.15, Ln. 128, Sinhu 1st Rd.,Neihu District,
Taipei City 114,
Taiwan (R.O.C.)
Telephone: (+886) 2 7710 1195

6. Chrome Care

Please contact your authorised reseller or authorised distributor in the first instance for all warranty queries.

For direct AOPEN Care in regard to AOPEN chrome products please see below:

Australia/ News Zealand

chromecare-au@aopen.com

Americas - including South America, Canada

chromecare-usa@aopen.com

Europe

chromecare-eu@aopen.com

Japan

chromecare-jp@aopen.com

Asia - Africa

chromecare-asia@aopen.com

All other areas:

chromecare-global@aopen.com

Part No.:

Doc. No.: 161-024-102

Federal Communication Commission Interference Statement

This equipment has been tested and found to comply with the limits for a Class B digital device, pursuant to Part 15 of the FCC Rules. These limits are designed to provide reasonable protection against harmful interference in a residential installation. This equipment generates, uses, and can radiate radio frequency energy and, if not installed and used in accordance with the instructions, may cause harmful interference to radio communications. However, there is no guarantee that interference will not occur in a particular installation. If this equipment does cause harmful interference to radio or television reception, which can be determined by turning the equipment off and on, the user is encouraged to try to correct the interference by one or more of the following measures:

• Reorient or relocate the receiving antenna.

• Increase the separation between the equipment and receiver.

• Connect the equipment into an outlet on a circuit different from that to which the receiver is connected.

• Consult the dealer or an experienced radio/TV technician for help.

FCC Caution:

This device complies with Part 15 of the FCC Rules. Operation is subject to the following two conditions: (1) This device may not cause harmful interference, and (2) this device must accept any interference received, including interference that may cause undesired operation.

Non-modification Statement:

Changes or modifications not expressly approved by the party responsible for compliance could void the user's authority to operate the equipment.

FCC Radiation Exposure Statement:

This equipment complies with FCC radiation exposure limits set forth for an uncontrolled environment. This equipment should be installed and operated with minimum distance 20cm between the radiator & your body.