HD5110 Radio Operator Manual

RAM

HD5110 User's Manual

Product Description:

The Anchor and RAM work together as an engineered solution for indoor warehouse distribution centers. The system is designed per the request of the customer and is setup and installed by trained service installers according to local regulations.

The RAM utilizes a UWB radio to determine the presence of Anchor devices. The UWB transceiver allows for 10cm accuracy. The RAM communicates via a CAN connection to the PCM for truck information. It is powered by the PCM via a LVLE 18VDC supply.

The system consists of single board containing two radios that use the UWB radios to communicate to Anchors located throughout the warehouse. The system uses ToF (time of flight) to get positioning in the warehouse. Only one radio is allowed at a time. DW1000 is to cover channel 3 and 5 and the QM33100 covers channel 5 and 9.

Note: Channel 3 is not available for use in Canada. Channels are set by the manufacturer and not selectable by the end user.

This product is for indoor use only: UWB devices may not be employed for the operation of toys. Operation onboard an aircraft, a ship or a satellite is prohibited.

Special Note: This product shall only be used indoors. Operation outdoors is in violation of 47 U.S.C. 301 and could subject the operator to serious legal penalties.

Tech Specs:

Power Input:

- The RAM module is supplied by an 18VDC 800 mA LVLE circuit. Typical power consumption is less than 100 mA.

Operating Temperature:

- -40 to +50 °C

Wireless Communications Interfaces:

- IEEE 802.15.4-2020 UWB IEEE 802.15.4z-2020 (BPRF)

Main Board:

- The main board containing the connectors, power supply, microcontroller, two UWB radios, the power supplies to feed the radios and the antenna.

RF Information:

- Core frequency into PLL (phase lock loop) 38.4 MHz
- Date Rate 6.81 MHz
- Transmit Frequencies
    - Channel 3 4492.8 MHz center frequency 499.2 MHz Bandwidth (not enabled in Canadian installations)
    - Channel 5 6489.6 MHz center frequency 499.2 MHz Bandwidth
    - Channel 9 7987.2 MHz center frequency 499.2 MHz Bandwidth
- Modulation BPM / BPSK.

Antenna, Internal or External:

- Antenna is in copper and is not modifiable.
- Any unauthorized change to the antennas is not permitted and will void the radio's regulatory compliance.

Serviceability:

- The entire module is NOT field serviceable. Changes or modifications not expressly approved by Crown Equipment Corporation could void the user's authority to operate the equipment.

Radio Certifications and Notices:

SAR: This wireless mobile and/or portable device has been shown to be compliant for localized specific absorption rate (SAR) for uncontrolled environment/general exposure limits specified in ANSI/IEEE Std. C95.1-1999 and had been tested in accordance with the measurement procedures specified in IEEE 1528-2003, OET Bulletin 65 Supp. C, RSS-102 and Safety Code 6.

This device meets the U.S. FCC's and ISED Canada's requirements for exposure to radio waves and is designed and manufactured not to exceed the emission limits for exposure to radio frequency (RF) energy. For satisfying RF exposure compliance requirements, body-worn operations are restricted to belt-clips, holsters or similar accessories that have no metallic component in the assembly and must provide at least 200 mm separation between the device, including its antenna, and the user's body. Cet appareil est conforme aux exigences des États-Unis en matière d'exposition aux ondes radioélectriques, de la FCC et d'ISED Canada. Il est conçu et fabriqué pour ne pas dépasser les limites d'émission imposées pour une exposition à l'énergie de radiofréquence (RF). Pour satisfaire aux exigences de conformité en matière d'exposition aux radiofréquences, les opérations portées sur le corps sont limitées aux pinces de ceinture, étuis ou accessoires similaires ne comportant aucun composant métallique dans l'assemblage et doivent ménager une distance minimale de 200 mm entre l'appareil, son antenne, et le corps de l'utilisateur.

This device complies with part 15 of the FCC Rules. Operation is subject to the following two conditions: (1) This device may not cause harmful interference, and (2) this device must accept any interference received, including interference that may cause undesired operation.

- *Note: This equipment has been tested and found to comply with the limits for a Class B digital device, pursuant to part 15 of the FCC Rules. These limits are designed to provide reasonable protection against harmful interference in a residential installation. This equipment generates, uses and can radiate radio frequency energy and, if not installed and used in accordance with the instructions, may cause harmful interference to radio communications. However, there is no guarantee that interference will not occur in a particular installation. If this equipment does cause harmful interference to radio or television reception, which can be determined by turning the equipment off and on, the user is encouraged to try to correct the interference by one or more of the following measures:*
- *—Reorient or relocate the receiving antenna.*
- *—Increase the separation between the equipment and receiver.*
- *—Connect the equipment into an outlet on a circuit different from that to which the receiver is connected.*
- *—Consult the dealer or an experienced radio/TV technician for help.*

This device contains licence-exempt transmitter(s)/receiver(s) that comply with Innovation, Science and Economic Development Canada's licence-exempt RSS(s). Operation is subject to the following two conditions:

1. This device may not cause interference.

2. This device must accept any interference, including interference that may cause undesired operation of the device.

L'émetteur/récepteur exempt de licence contenu dans le présent appareil est conforme aux CNR d'Innovation, Sciences et Développement économique Canada applicables aux appareils radio exempts de licence. L'exploitation est autorisée aux deux conditions suivantes :

1. L'appareil ne doit pas produire de brouillage;

2. L'appareil doit accepter tout brouillage radioélectrique subi, même si le brouillage est susceptible d'en compromettre le fonctionnement.

Operation outdoors is in violation of 47 U.S.C. 301 and could subject the operator to serious legal penalties.

<u>Additional Information:</u>

Mounting

- This module is to be mounted in a vertical position with the antenna end pointed up on multiple truck models, typically above the operator cage.

Labels

- The following labels are attached to the module.

- Assembly Diagrams

ITEM	PART NUMBER	DESCRIPTION	QTY
			-001
1	060061-080	SCREW M5 HEX FLANGE HEAD	4
2	060078-029	SCREW THREAD ROLLING .312	2
3	167998-003	ASM RAM RA HD5110	1
4	172190-157	HARNESS 4 PIN PWR CAN EXT RA	1
5	174898	LABEL GEOASSIST	1
6	175028	BRACKET RAM	1
7	600380-900-002	OPERATOR MANUAL RR UWB RTLS	1

NOTES:
1. ITEMS 2, 4, 5, AND 7 NOT SHOWN.

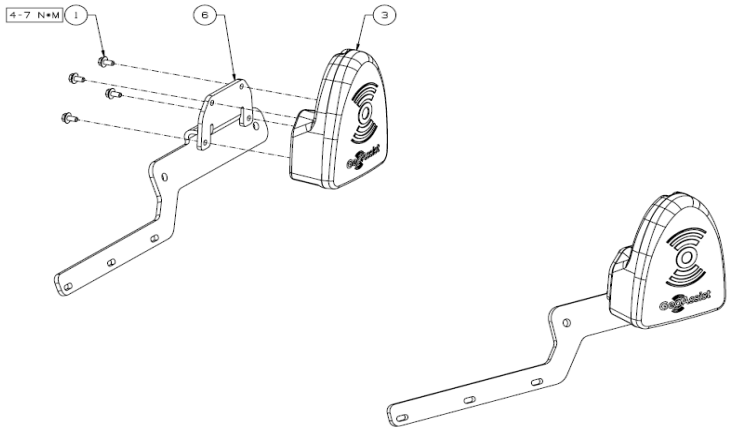

DRAFT
NOT TO BE USED FOR PART PROCUREMENT
REVISED 02-20-2025

REFERENCE ASME Y14.5M - 1994
METRIC DRAWING
ALL DIMENSIONS IN MILLIMETERS
TOLERANCES UNLESS OTHERWISE SPECIFIED
DIMENSIONS ±1
ANGLES ±1/2°
FLAT DEVELOPMENTS & THEIR DIMENSIONS MAY NOT CONFORM TO MANUFACTURING PRACTICES OF ALL CROWN FACILITIES OR OTHER SUPPLIERS.
THIRD ANGLE PROJECTION

FINISH	NONE
PROJECT	T2373
DRAWN BY	AFREEMAN
DATE	FEB-03-25
CHECKED BY	JFRADY
SCALE	1:2

CROWN www.crown.com
This document contains information which is confidential and proprietary to Crown Equipment Corporation. Any form of disclosure, reproduction or distribution without prior written consent of Crown Equipment Corporation is strictly prohibited.
RAW MATERIAL SPEC
Sheet 01 of 01
PART NAME: KIT RR UWB RTLS CAN
DOCUMENT NUMBER: 175029
VERSION: A
175029nxm000_a

ER NO	VER	DATE	DESCRIPTION
1	A	00-00-00	NEW DOCUMENT

ITEM	PART NUMBER	DESCRIPTION	QTY
			-001
1	060005-008	LOCKWASHER 5/16"	4
2	060005-009	LOCKWASHER 3/8"	2
3	060016-003	SCREW 5/16" X 0.75	2
4	060016-004	SCREW 5/16" X 1.00	2
5	060017-006	SCREW 3/8" X 0.75	2
6	060031-024	NUT SPEED 3/8"	2
7	060061-026	SCREW M5 X 10 FLAT HEAD	4
8	060061-090	SCREW M5 X 20 FLANGE HEAD	4
9	060063-082	SCREW M8 X 40 FLANGE HEAD	1
10	060078-029	SCREW THREAD ROLLING .312	2
11	167998-003	ASM RAM RA HD5110	1
12	172190-157	HARNESS 4 PIN PWR CAN EXT RA	1
13	172243	BRACKET CABLE GUIDE	1
14	174898	LABEL GEOASSIST	1
15	174963	BRACKET RAM	1
16	174972	PLATE SPACER	1
17	600380-900-001	OPERATOR MANUAL SP UWB RTLS	1
18	061004-006	ADHESIVE THREAD LOCKING	A/R

NOTES:
1. ITEMS 1-6, 8-10, 12-14, 16, AND 17 NOT SHOWN.

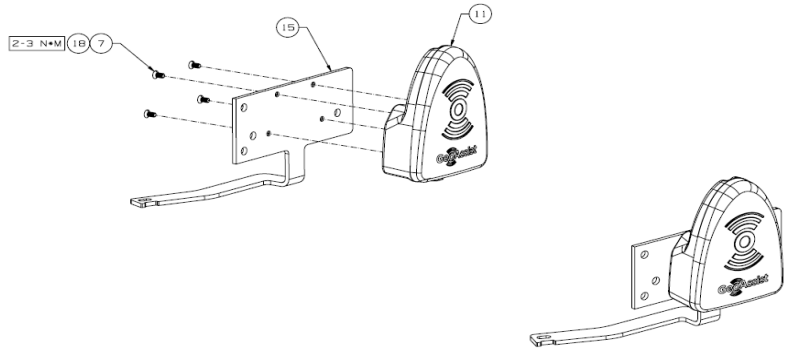

DRAFT
NOT TO BE USED FOR PART PROCUREMENT
REVISED 02-04-2025

REFERENCE ASME Y14.5M - 1994
METRIC DRAWING
ALL DIMENSIONS IN MILLIMETERS
TOLERANCES UNLESS OTHERWISE SPECIFIED
DIMENSIONS ±1
ANGLES ±1/2°
FLAT DEVELOPMENTS & THEIR DIMENSIONS MAY NOT CONFORM TO MANUFACTURING PRACTICES OF ALL CROWN FACILITIES OR OTHER SUPPLIERS.
THIRD ANGLE PROJECTION

FINISH	NONE
PROJECT	T2287
DRAWN BY	AFREEMAN
DATE	JAN-24-25
CHECKED BY	JFRADY
SCALE	1:2

CROWN www.crown.com
This document contains information which is confidential and proprietary to Crown Equipment Corporation. Any form of disclosure, reproduction or distribution without prior written consent of Crown Equipment Corporation is strictly prohibited.
RAW MATERIAL SPEC
Sheet 01 of 01
PART NAME: KIT SP UWB RTLS CAN
DOCUMENT NUMBER: 174968
VERSION: A
174968nxm000_a

ER NO	VER	DATE	DESCRIPTION
1	A	00-00-00	NEW DOCUMENT

IMAGES of the RAM:

FRONT VIEW:

REAR VIEW:

MODEL HD5110
P/N 167998 D/N -003
S/N AC2024520017 CUWBID 0C040066
FCC ID: YGP5110-01
IC: 9016A-HD5110A
HD5110
173383

FCC ID: YGP5110-01
IC: 9016A-HD5110A
HD5110