Annex B Test Setup Photos

EUT Antenna Location

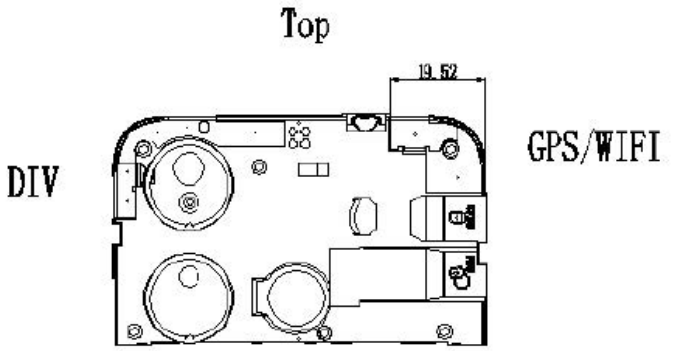

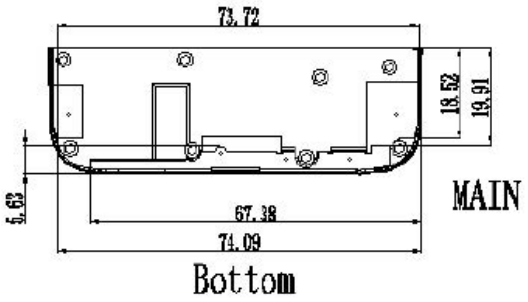

Head

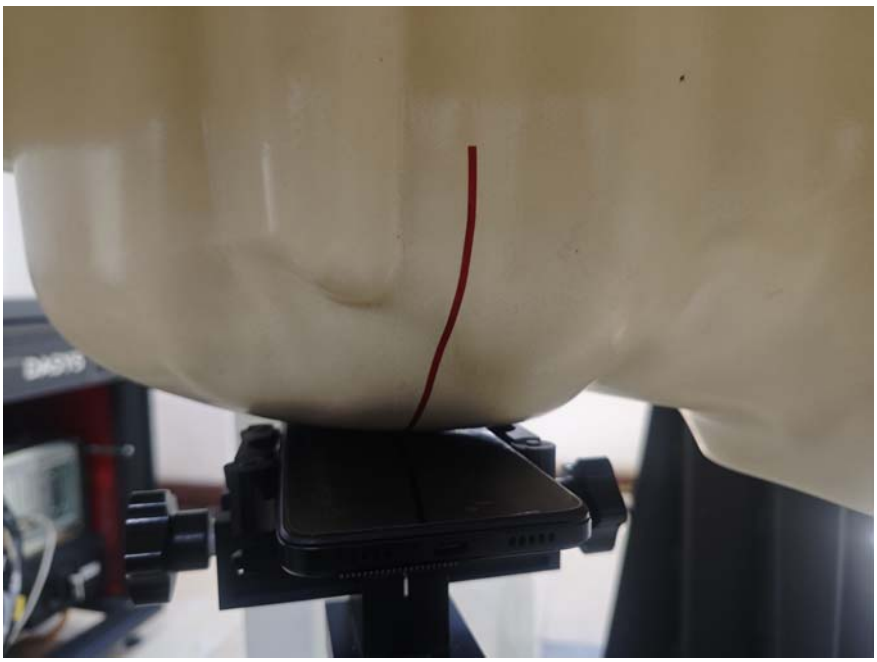

Right Cheek

Right Tilt

Left Cheek

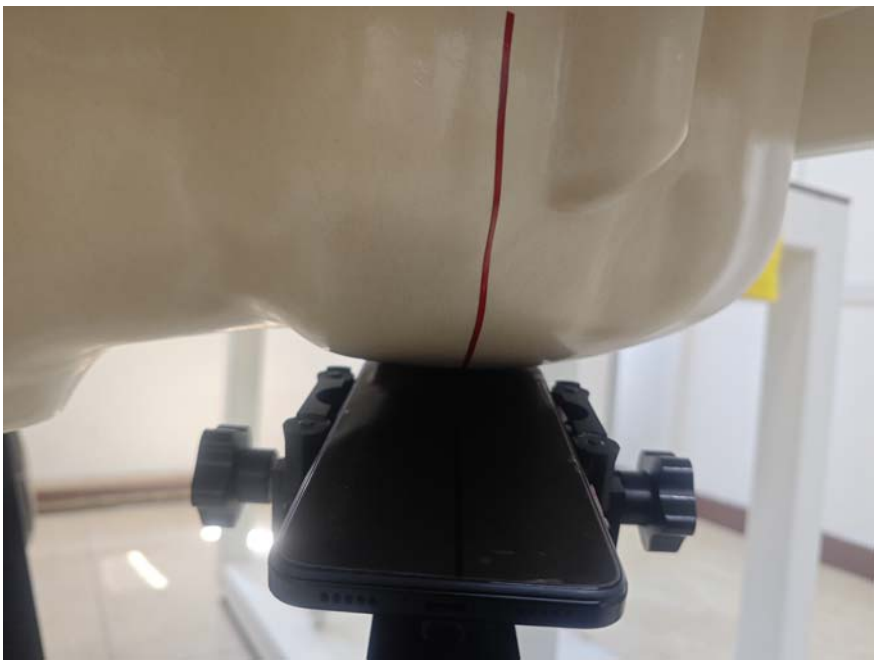

Left Tilt

Body

Front Side (Test distance: 10mm)

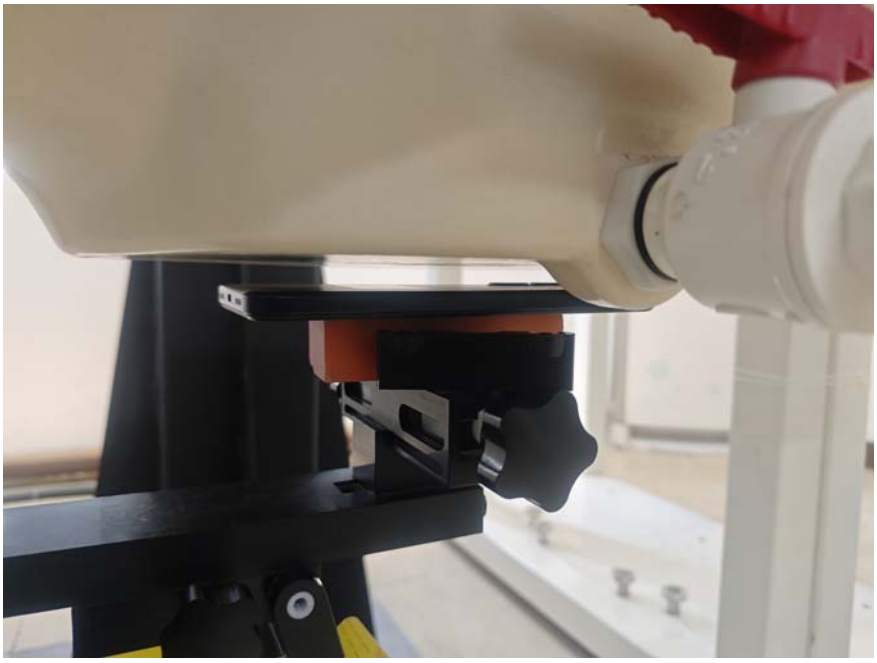

Back Side (Test distance: 10mm)

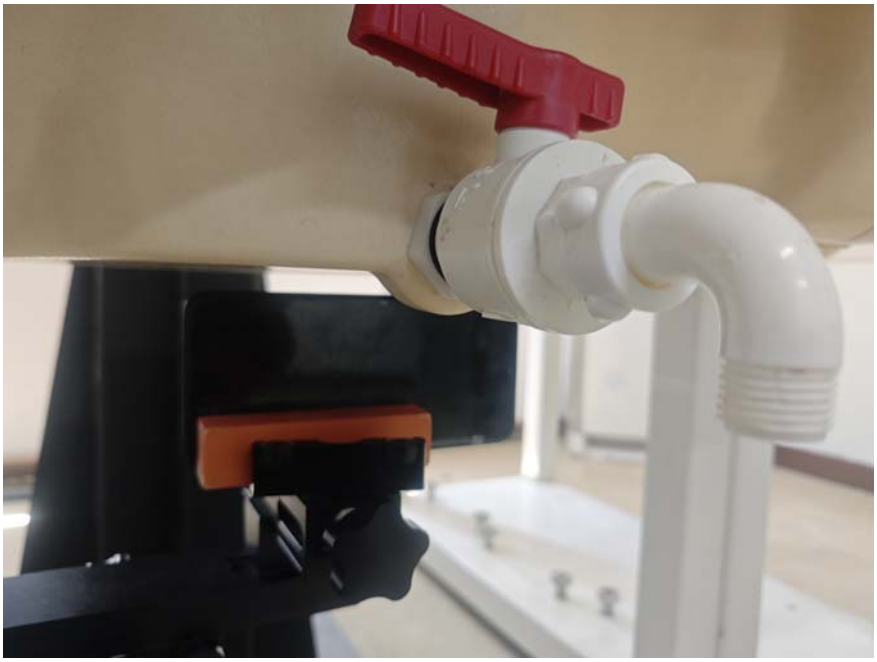

Left Side (Test distance: 10mm)

Right Side (Test distance: 10mm)

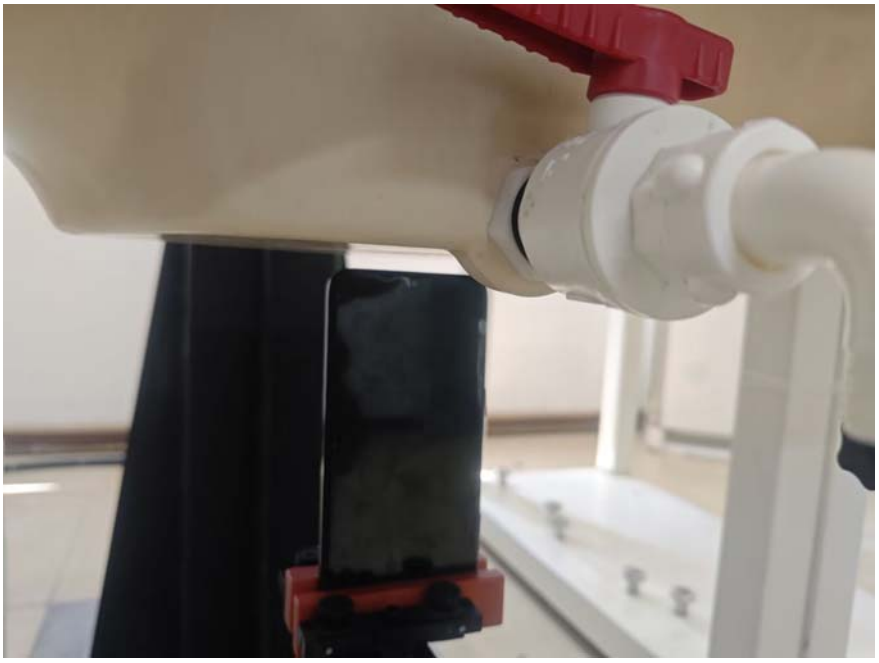

Top Side (Test distance: 10mm)

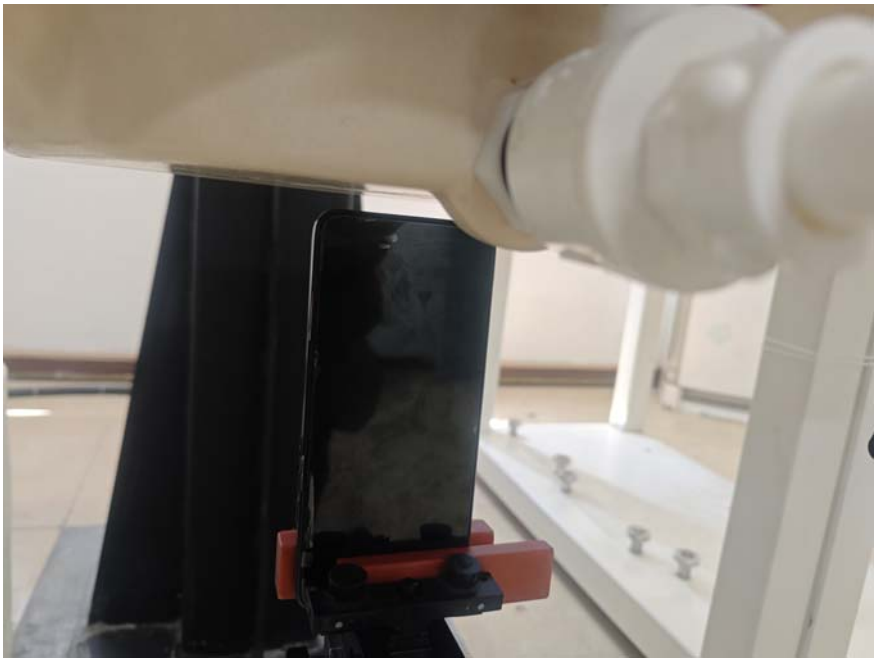

Bottom Side (Test distance: 10mm)