FCC Test Report

APPLICANT	:	**CT Asia**
EQUIPMENT	:	**GSM mobile phone**
BRAND NAME	:	**BLU**
MODEL NAME	:	**Deco Pro**
FCC ID	:	**YHLBLUDECOPRO**
STANDARD	:	**FCC 47 CFR FCC Part 15 Subpart B**
CLASSIFICATION	:	**Certification**

The product was received on Dec. 23, 2011 and completely tested on Feb. 13, 2012. We, SPORTON INTERNATIONAL (KUNSAHN) INC., would like to declare that the tested sample has been evaluated in accordance with the procedures given in ANSI C63.4-2003 and shown the compliance with the applicable technical standards.

The test results in this report apply exclusively to the tested model / sample. Without written approval of SPORTON INTERNATIONAL (KUNSHAN) INC., the test report shall not be reproduced except in full.

Reviewed by:

Jones Tsai / Manager

Testing Laboratory
1190

SPORTON INTERNATIONAL (KUNSHAN) INC.
No. 3-2, PingXiang Road, Kunshan, Jiangsu Province, P.R.C.

TABLE OF CONTENTS

REVISION HISTORY **3**

SUMMARY OF TEST RESULT **4**

1. GENERAL DESCRIPTION **5**

1.1. Applicant 5
1.2. Manufacturer 5
1.3. Feature of Equipment Under Test 5
1.4. Test Site 6
1.5. Applied Standards 6
1.6. Ancillary Equipment List 7

2. TEST CONFIGURATION OF EQUIPMENT UNDER TEST **7**

2.1. Test Mode 8
2.2. Connection Diagram of Test System 10
2.3. Test Software 12

3. TEST RESULT **13**

3.1. Test of AC Conducted Emission Measurement 13
3.2. Test of Radiated Emission Measurement 19

4. LIST OF MEASURING EQUIPMENT **25**

5. UNCERTAINTY OF EVALUATION **26**

APPENDIX A. PHOTOGRAPHS OF EUT

APPENDIX B. SETUP PHOTOGRAPHS

REVISION HISTORY

REPORT NO.	VERSION	DESCRIPTION	ISSUED DATE
FD1D2304	Rev. 01	Initial issue of report	Feb. 14, 2012

SUMMARY OF TEST RESULT

Report Section	FCC Rule	Description	Limit	Result	Remark
3.1	15.107	AC Conducted Emission	< 15.107 limits	PASS	Under limit 8.77 dB at 2.99 MHz
3.2	15.109	Radiated Emission	< 15.109 limits or	PASS	Under limit 3.13 dB at 190.65 MHz

1. General Description

1.1. Applicant

CT Asia
RMA2011, 20/F, GOLDEN CENTRAL TOWER, NO.3037# JINTIAN ROAD, FUTIAN DISTRICT

1.2. Manufacturer

zechin communication co., Ltd
Unit804, 8th Floor Desay Tech Building Gaoxin Road South, Nanshan District Shenzhen, china

1.3. Feature of Equipment Under Test

Product Feature & Specification	
Equipment	GSM mobile phone
Brand Name	BLU
Model Name	Deco Pro
FCC ID	YHLBLUDECOPRO
Tx Frequency Range	GSM850 : 824 MHz ~ 849 MHz GSM1900 : 1850 MHz ~ 1910 MHz Bluetooth : 2402 MHz ~ 2480 MHz WLAN : 2400 MHz ~ 2483.5 MHz
Rx Frequency Range	GSM850 : 869 MHz ~ 894 MHz GSM1900 : 1930 MHz ~ 1990 MHz Bluetooth : 2402 MHz ~ 2480 MHz WLAN : 2400 MHz ~ 2483.5 MHz
Antenna Type	WWAN : Fixed Internal Antenna Bluetooth : Dipole Antenna WLAN : PIFA Antenna
HW Version	E720-MB-V1.0
SW Version	E720_HX_LCH_BT_FM_FL_GS_TV_WF_DC_003_V011
Type of Modulation	GSM / GPRS : GMSK Bluetooth (1Mbps) : GFSK Bluetooth EDR (2Mbps) : π/4-DQPSK Bluetooth EDR (3Mbps) : 8-DPSK 802.11b : DSSS (BPSK / QPSK / CCK) 802.11g : OFDM (BPSK / QPSK / 16QAM / 64QAM)
EUT Stage	Identical Prototype

Remark: The above EUT's information was declared by manufacturer. Please refer to the specifications or user's manual for more detailed description.

1.4. Test Site

Test Site	SPORTON INTERNATIONAL (SHENZHEN) INC.
Test Site Location	No. 101, Complex Building C, Guanglong Village, Xili Town, Nanshan District, Shenzhen, Guangdong, P.R.C. TEL: +86-755-8637-9589 FAX: +86-755-8637-9595
Test Site No.	**Sporton Site No. :**
	CO01-SZ

Test Site	SPORTON INTERNATIONAL (KUNSHAN) INC.
Test Site Location	No. 3-2, PingXiang Road, Kunshan, Jiangsu Province, P.R.C. TEL: +86-0512-5790-0158 FAX: +86-0512-5790-0958
Test Site No.	**Sporton Site No.**
	03CH01-KS

1.5. Applied Standards

According to the specifications of the manufacturer, the EUT must comply with the requirements of the following standards:

- FCC 47 CFR FCC Part 15 Subpart B
- ANSI C63.4-2003

Remark:

1. All test items were verified and recorded according to the standards and without any deviation during the test.
2. This report is intention of applying for FCC 15B certification only.

1.6. Ancillary Equipment List

Item	Equipment	Trade Name	Model Name	FCC ID	Data Cable	Power Cord
1.	System Simulator	R&S	CMU 200	N/A	N/A	Unshielded, 1.8 m
2.	Signal Generator	R&S	CMU 200	N/A	N/A	Unshielded, 1.8 m
3.	PC	R&S	MT380	FCC DoC	N/A	Unshielded, 1.8 m
4.	Monitor	DELL	E1910Hc	FCC DoC	Shielded, 1.2 m	Unshielded, 1.8 m
5.	Printer	HP	Laser Jet 1018	FCC DoC	Shielded, 1.8 m	Unshielded, 1.8 m
6.	Bluetooth Earphone	Nokia	BH-102	PYAHS-107W	N/A	N/A
7.	(USB) Keyboard	DELL	L100	FCC DoC	Shielded, 1.8 m with Core	N/A
8.	(USB) Mouse	DELL	MO56UC	FCC DoC	Shielded, 1.8 m	N/A
9.	iPod	Apple	A1199	FCC DoC	Shielded, 1.2 m	N/A
10.	Router	D-link	DIR-855	KA2DIR855A2	N/A	Unshielded, 1.8 m

2. Test Configuration of Equipment Under Test

2.1. Test Mode

The EUT has been associated with peripherals pursuant to ANSI C63.4-2003 and configuration operated in a manner tended to maximize its emission characteristics in a typical application.

Frequency range investigated: conduction (150 kHz to 30 MHz), radiation (30MHz to the 5th harmonic of the highest fundamental frequency or to 40 GHz, whichever is lower).

The following tables are showing the test modes as the worst cases and recorded in this report.

Item	EUT Configuration	Test Condition		
		EMI AC	EMI RE<1G	EMI RE≥1G
1.	Operating Mode (EUT with Adapter and earphone)	☒	☒	☒
2.	Data application transferred Mode (EUT with PC or notebook)	☒	☒	☒

Abbreviations:

- EMI AC: AC conducted emissions
- EMI RE ≥ 1G: EUT radiated emissions ≥ 1GHz
- EMI RE < 1G: EUT radiated emissions < 1GHz

Test Items	EUT Configure Mode	Function Type
AC Conducted Emission	1/2	Mode 1: GSM 850 Idle + Bluetooth Idle + WLAN Idle + Adapter + Earphone + Camera Mode 2: **GSM 1900 Idle + Bluetooth Idle + WLAN Idle + Adapter + Earphone + MPEG4** Mode 3: GSM 850 Idle + Bluetooth Idle + WLAN Idle + Adapter + Earphone + FM Rx Mode 4: **GSM 1900 Idle + Bluetooth Idle + WLAN Idle + USB Cable (Link with Notebook) + Earphone**
Radiated Emissions < 1GHz	1/2	Mode 1: GSM 850 Idle + Bluetooth Idle + WLAN Idle + Adapter + Earphone + Camera Mode 2: **GSM 1900 Idle + Bluetooth Idle + WLAN Idle + Adapter + Earphone + MPEG4** Mode 3: GSM 850 Idle + Bluetooth Idle + WLAN Idle + Adapter + Earphone + FM Rx Mode 4: **GSM 1900 Idle + Bluetooth Idle + WLAN Idle + USB Cable (Link with PC) + Earphone**
Radiated Emissions ≥ 1GHz	1	Mode 1: GSM 1900 Idle + Bluetooth Idle + WLAN Idle + Adapter + Earphone + MPEG4 Mode 2: GSM 1900 Idle + Bluetooth Idle + WLAN Idle + USB Cable (Link with PC) + Earphone

Remark:

1. The worst case of AC Conducted Emission is mode 2; and mode 4 that for data exchange mode also reported.
2. The worst case of RE < 1G is mode 2; and mode 4 that for data exchange mode also reported.
3. Link with PC or Notebook means data application transferred mode between EUT and PC or Notebook.

2.2. Connection Diagram of Test System

<EUT with Adapter and Earphone Mode>

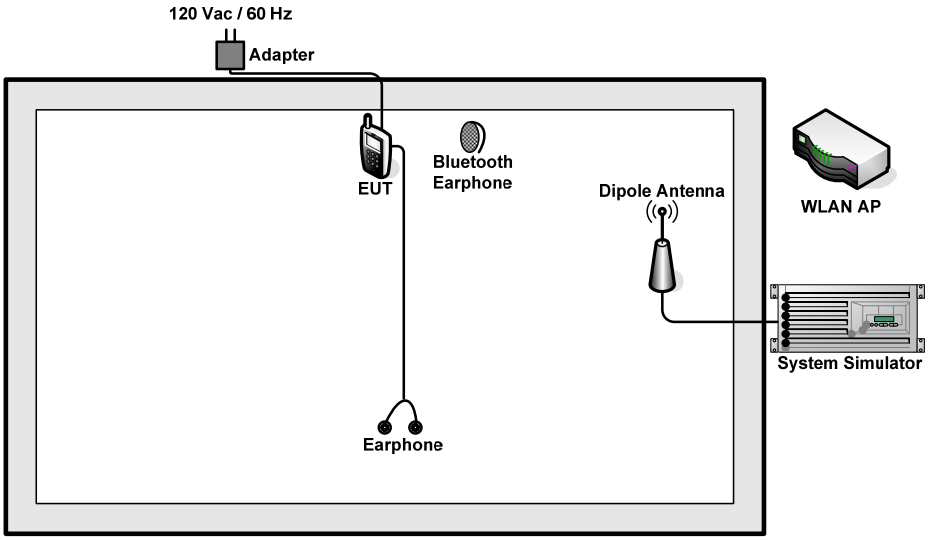

< EUT with Adapter and Earphone In FM Rx Mode >

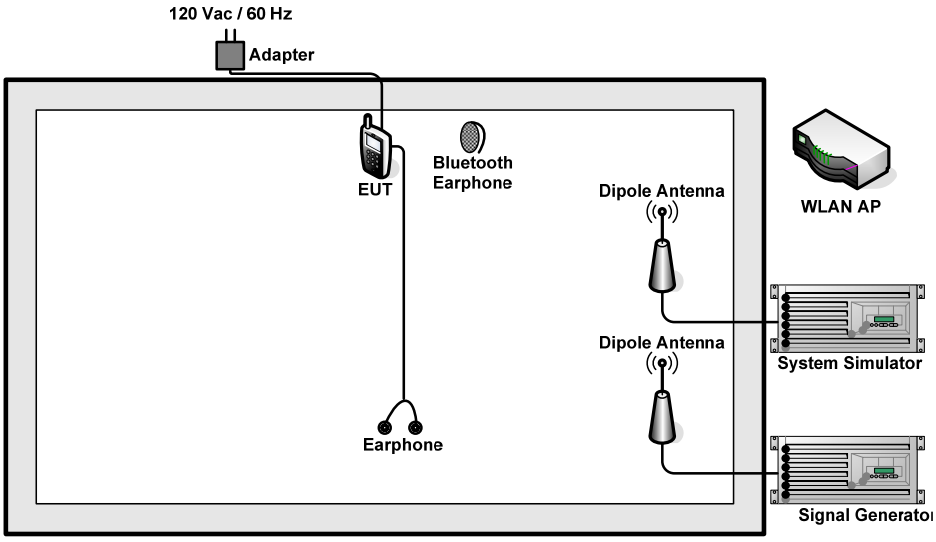

< EUT with USB Cable (Link with PC) Mode >

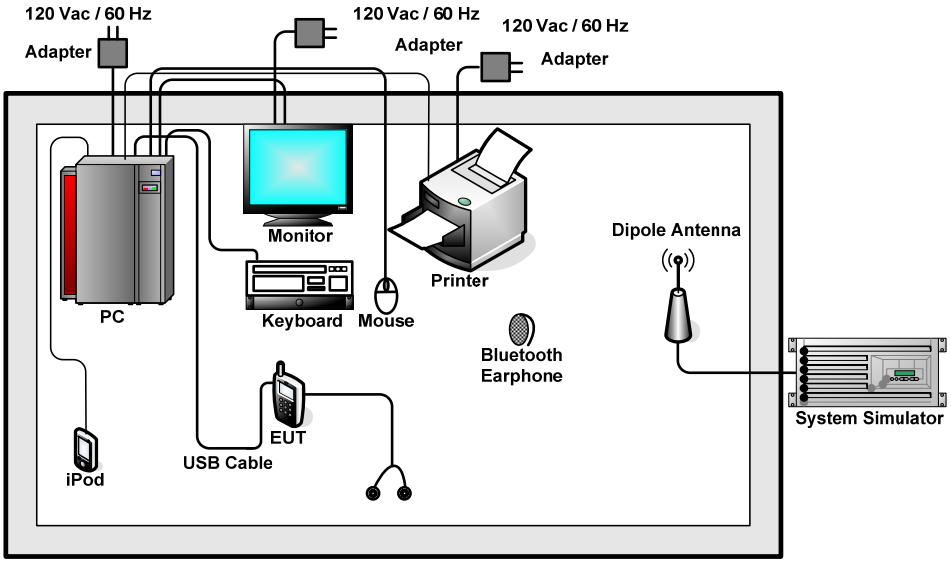

<EUT with USB Cable (Link with Notebook) Mode>

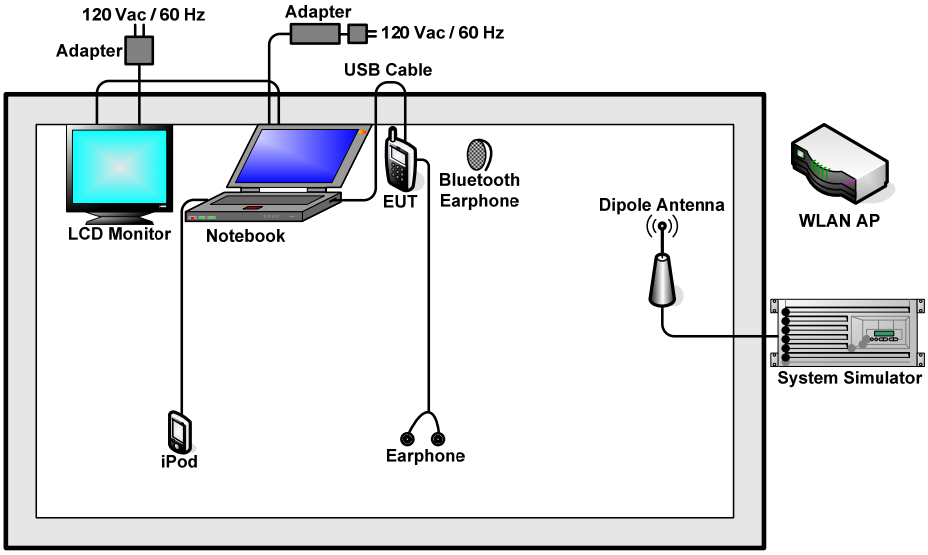

2.3. Test Software

The EUT was in GSM idle mode during the testing. The EUT was synchronized to the BCCH, and is in continuous receiving mode by setting system simulator's paging reorganization.

At the same time, the EUT was attached to the Bluetooth earphone or WLAN AP, and the following programs installed in the EUT were programmed during the test.

1. Execute the program, "Winthrax", installed in notebook or PC for active sync files transfer with EUT via USB cable / iPod.
2. Execute "Video Player" to play MPEG4 files.
3. Turn on camera to capture images.
4. Turn on FM function to keep EUT receiving signals continuously in FM Rx mode.
5. the EUT receive signals from base station continuously.

3. Test Result

3.1. Test of AC Conducted Emission Measurement

3.1.1 Limits of AC Conducted Emission

For equipment that is designed to be connected to the public utility (AC) power line, the radio frequency voltage that is conducted back onto the AC power line on any frequency or frequencies within the band 150 kHz to 30 MHz shall not exceed the limits in the following table.

Frequency of emission (MHz)	Conducted limit (dBuV)	
	Quasi-peak	Average
0.15-0.5	66 to 56*	56 to 46*
0.5-5	56	46
5-30	60	50

*Decreases with the logarithm of the frequency.

3.1.2 Measuring Instruments

See list of measuring instruments of this test report.

3.1.3 Test Procedure

1. The EUT was placed 0.4 meter from the conducting wall of the shielding room was kept at least 80 centimeters from any other grounded conducting surface.
2. The EUT link with PC, connect PC to the power mains through a line impedance stabilization network (LISN).
3. All the support units are connecting to the other LISN.
4. The LISN provides 50 ohm coupling impedance for the measuring instrument.
5. The FCC states that a 50 ohm, 50 microhenry LISN should be used.
6. Both sides of AC line were checked for maximum conducted interference.
7. The frequency range from 150 kHz to 30 MHz was searched.
8. Set the test-receiver system to Peak Detect Function and specified bandwidth with Maximum Hold Mode.

3.1.4 Test Setup

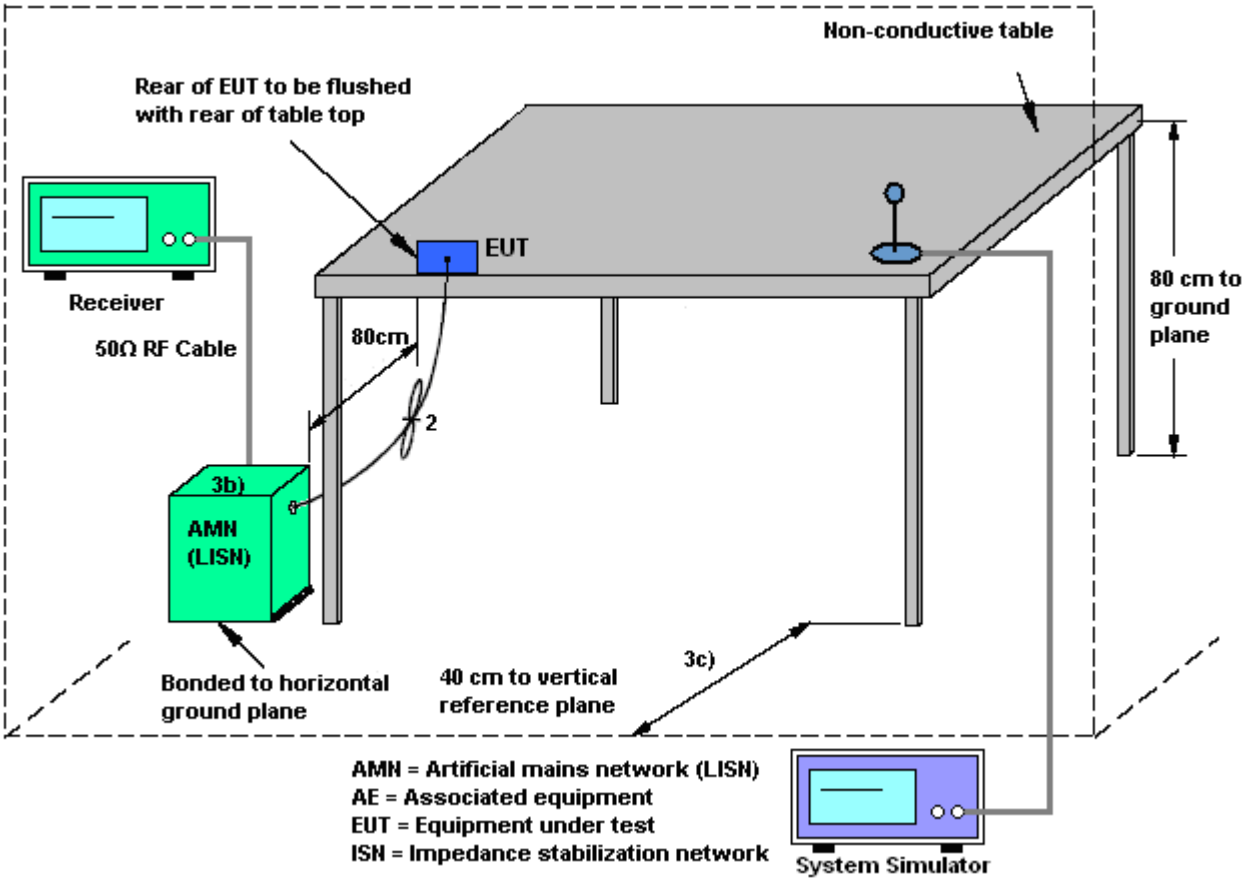

3.1.5 Test Result of AC Conducted Emission

Test Mode :	Mode 2	**Temperature :**	22~23℃
Test Engineer :	King Liu	**Relative Humidity :**	44~46%
Test Voltage :	120Vac / 60Hz	**Phase :**	Line
Function Type :	GSM 1900 Idle + Bluetooth Idle + WLAN Idle + Adapter + Earphone + MPEG4		
Remark :	All emissions not reported here are more than 10 dB below the prescribed limit.		

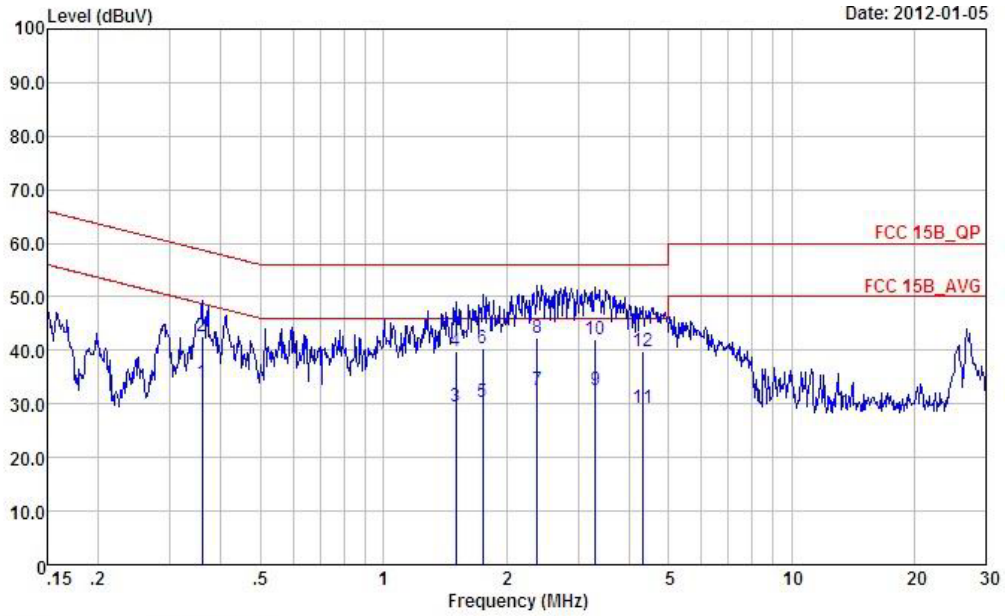

Site : CO01-SZ
Condition : FCC 15B_QP LISN_L_2000601 LINE
Project : (FD)1D2304
Mode : Mode2

	Freq	Level	Over Limit	Limit Line	Read Level	LISN Factor	Cable Loss	Remark
	MHz	dBuV	dB	dBuV	dBuV	dB	dB	
1	0.36	34.09	-14.65	48.74	24.00	0.02	10.07	Average
2	0.36	42.59	-16.15	58.74	32.50	0.02	10.07	QP
3	1.50	29.66	-16.34	46.00	19.50	0.03	10.13	Average
4	1.50	39.76	-16.24	56.00	29.60	0.03	10.13	QP
5	1.75	30.47	-15.53	46.00	20.30	0.03	10.14	Average
6	1.75	40.47	-15.53	56.00	30.30	0.03	10.14	QP
7	2.38	32.71	-13.29	46.00	22.50	0.04	10.17	Average
8	2.38	42.21	-13.79	56.00	32.00	0.04	10.17	QP
9	3.31	32.54	-13.46	46.00	22.30	0.05	10.19	Average
10	3.31	41.94	-14.06	56.00	31.70	0.05	10.19	QP
11	4.31	29.15	-16.85	46.00	18.90	0.06	10.19	Average
12	4.31	39.95	-16.05	56.00	29.70	0.06	10.19	QP

Test Mode :	Mode 2	**Temperature :**	22~23℃
Test Engineer :	King Liu	**Relative Humidity :**	44~46%
Test Voltage :	120Vac / 60Hz	**Phase :**	Neutral
Function Type :	GSM 1900 Idle + Bluetooth Idle + WLAN Idle + Adapter + Earphone + MPEG4		
Remark :	All emissions not reported here are more than 10 dB below the prescribed limit.		

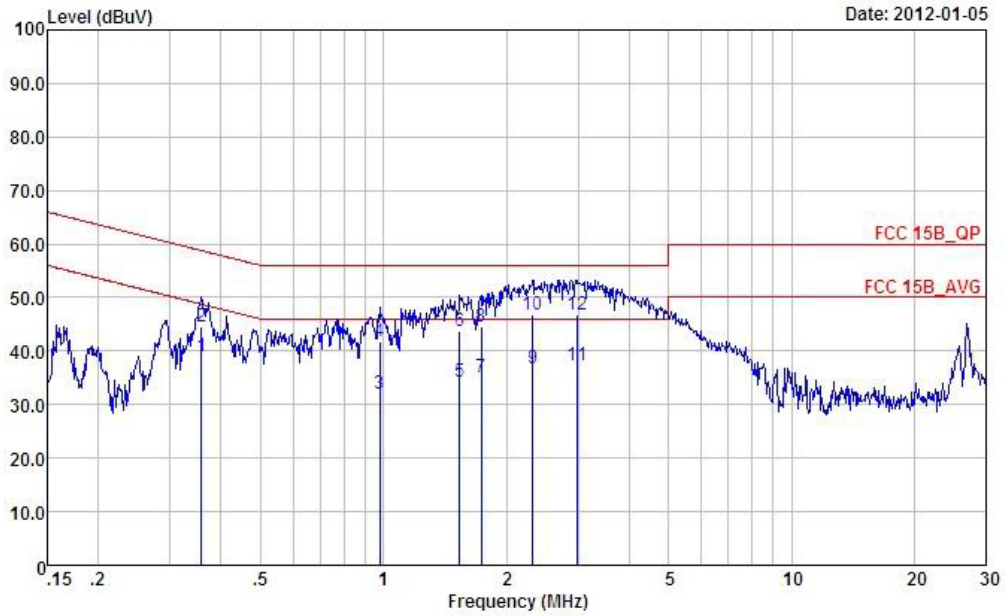

Site : CO01-SZ
Condition : FCC 15B_QP LISN_N_2000601 NEUTRAL
Project : (FD)1D2304
Mode : Mode2

	Freq	Level	Over Limit	Limit Line	Read Level	LISN Factor	Cable Loss	Remark
	MHz	dBuV	dB	dBuV	dBuV	dB	dB	
1	0.36	38.89	-9.89	48.78	28.80	0.02	10.07	Average
2	0.36	44.69	-14.09	58.78	34.60	0.02	10.07	QP
3	0.98	32.03	-13.97	46.00	21.90	0.02	10.11	Average
4	0.98	41.73	-14.27	56.00	31.60	0.02	10.11	QP
5	1.54	34.16	-11.84	46.00	24.00	0.03	10.13	Average
6	1.54	43.86	-12.14	56.00	33.70	0.03	10.13	QP
7	1.73	35.17	-10.83	46.00	25.00	0.03	10.14	Average
8	1.73	44.57	-11.43	56.00	34.40	0.03	10.14	QP
9	2.32	36.90	-9.10	46.00	26.69	0.04	10.17	Average
10	2.32	46.70	-9.30	56.00	36.49	0.04	10.17	QP
11	2.99	37.23	-8.77	46.00	26.99	0.05	10.19	Average
12	2.99	46.73	-9.27	56.00	36.49	0.05	10.19	QP

Test Mode :	Mode 4	**Temperature :**	22~23℃
Test Engineer :	King Liu	**Relative Humidity :**	44~46%
Test Voltage :	120Vac / 60Hz	**Phase :**	Line
Function Type :	GSM 1900 Idle + Bluetooth Idle + WLAN Idle + USB Cable (Link with Notebook) + Earphone		
Remark :	All emissions not reported here are more than 10 dB below the prescribed limit.		

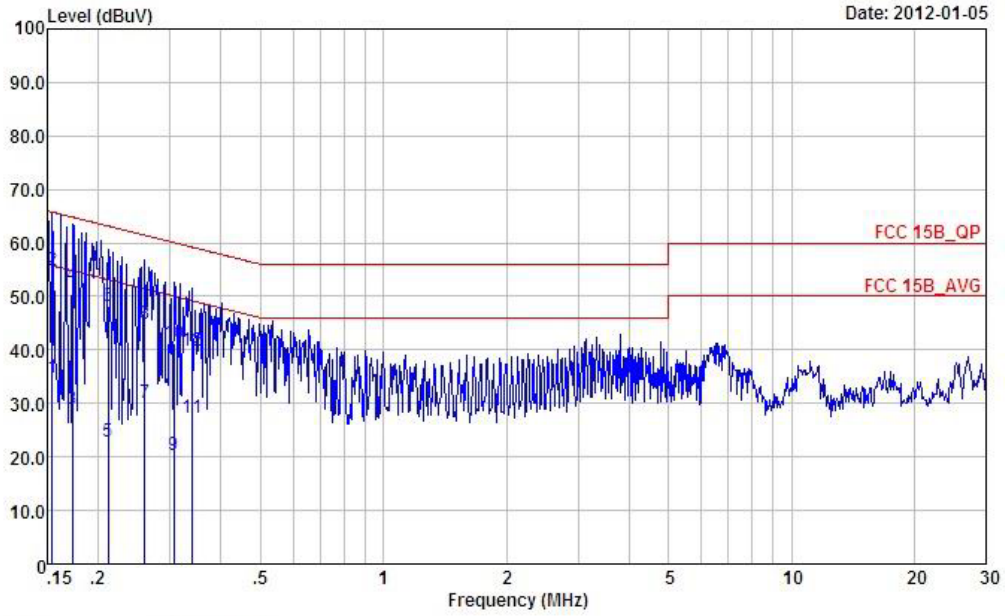

Site : CO01-SZ
Condition : FCC 15B_QP LISN_L_2000601 LINE
Project : (FD)1D2304

	Freq	Level	Over Limit	Limit Line	Read Level	LISN Factor	Cable Loss	Remark
	MHz	dBuV	dB	dBuV	dBuV	dB	dB	
1	0.15	34.68	-21.10	55.78	24.60	0.03	10.05	Average
2	0.15	54.88	-10.90	65.78	44.80	0.03	10.05	QP
3	0.17	28.88	-25.93	54.81	18.80	0.03	10.05	Average
4	0.17	51.98	-12.83	64.81	41.90	0.03	10.05	QP
5	0.21	22.88	-30.26	53.14	12.80	0.02	10.06	Average
6	0.21	48.18	-14.96	63.14	38.10	0.02	10.06	QP
7	0.26	30.19	-21.23	51.42	20.11	0.02	10.06	Average
8	0.26	44.79	-16.63	61.42	34.71	0.02	10.06	QP
9	0.31	20.39	-29.67	50.06	10.31	0.02	10.06	Average
10	0.31	41.09	-18.97	60.06	31.01	0.02	10.06	QP
11	0.34	27.29	-21.93	49.22	17.20	0.02	10.07	Average
12	0.34	39.89	-19.33	59.22	29.80	0.02	10.07	QP

Test Mode :	Mode 4	**Temperature :**	22~23℃
Test Engineer :	King Liu	**Relative Humidity :**	44~46%
Test Voltage :	120Vac / 60Hz	**Phase :**	Neutral
Function Type :	GSM 1900 Idle + Bluetooth Idle + WLAN Idle + USB Cable (Link with Notebook) + Earphone		
Remark :	All emissions not reported here are more than 10 dB below the prescribed limit.		

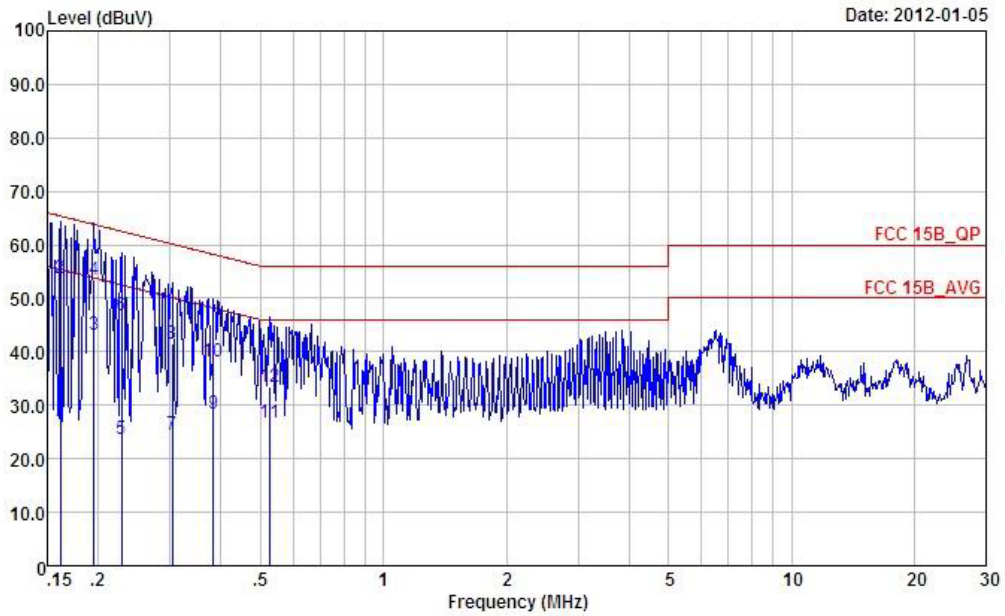

Site : CO01-SZ
Condition : FCC 15B_QP LISN_N_2000601 NEUTRAL
Project : (FD)1D2304

	Freq	Level	Over Limit	Limit Line	Read Level	LISN Factor	Cable Loss	Remark
	MHz	dBuV	dB	dBuV	dBuV	dB	dB	
1	0.16	25.47	-29.91	55.38	15.40	0.02	10.05	Average
2	0.16	53.87	-11.51	65.38	43.80	0.02	10.05	QP
3	0.20	43.07	-10.73	53.80	32.99	0.02	10.06	Average
4	0.20	53.37	-10.43	63.80	43.29	0.02	10.06	QP
5	0.23	23.58	-28.94	52.52	13.50	0.02	10.06	Average
6	0.23	46.78	-15.74	62.52	36.70	0.02	10.06	QP
7	0.30	24.38	-25.77	50.15	14.30	0.02	10.06	Average
8	0.30	41.48	-18.67	60.15	31.40	0.02	10.06	QP
9	0.38	28.29	-19.92	48.21	18.20	0.02	10.07	Average
10	0.38	38.19	-20.02	58.21	28.10	0.02	10.07	QP
11	0.53	26.70	-19.30	46.00	16.59	0.02	10.09	Average
12	0.53	33.50	-22.50	56.00	23.39	0.02	10.09	QP

3.2. Test of Radiated Emission Measurement

3.2.1. Limit of Radiated Emission

The emissions from an unintentional radiator shall not exceed the field strength levels specified in the following table:

Frequency (MHz)	Field Strength (microvolts/meter)	Measurement Distance (meters)
30 – 88	100	3
88 – 216	150	3
216 - 960	200	3
Above 960	500	3

3.2.2. Measuring Instruments

See list of measuring instruments of this test report.

3.2.3. Test Procedures

1. The EUT was placed on a turntable with 0.8 meter above ground.
2. The EUT was set 3 meters from the interference receiving antenna, which was mounted on the top of a variable height antenna tower.
3. The table was rotated 360 degrees to determine the position of the highest radiation.
4. The antenna is a Bi-Log antenna and its height is adjusted between one meter and four meters above ground to find the maximum value of the field strength for both horizontal polarization and vertical polarization of the antenna.
5. For each suspected emission, the EUT was arranged to its worst case and then tune the antenna tower (from 1 m to 4 m) and turntable (from 0 degree to 360 degrees) to find the maximum reading.
6. Set the test-receiver system to Peak Detect Function and specified bandwidth with Maximum Hold Mode.
7. If the emission level of the EUT in peak mode was 3 dB lower than the limit specified, then testing will be stopped and peak values of EUT will be reported, otherwise, the emissions will be repeated one by one using the quasi-peak method and reported
8. Emission level (dBuV/m) = 20 log Emission level (uV/m)
9. Corrected Reading: Antenna Factor + Cable Loss + Read Level - Preamp Factor = Level

3.2.4. Test Setup of Radiated Emission

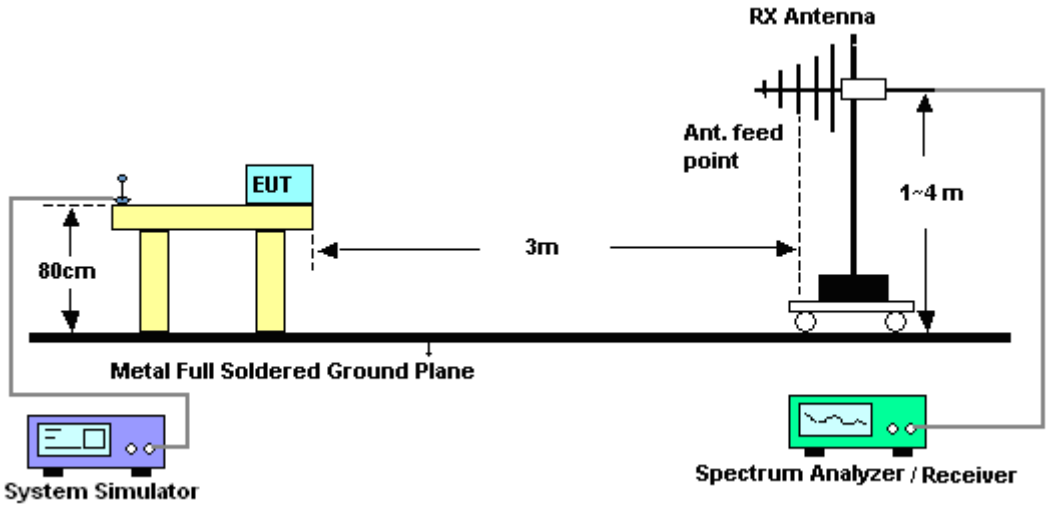

3.2.5. Test Result of Radiated Emission

Test Mode :	Mode 2	**Temperature :**	20~21˚C
Test Engineer :	Jack Li	**Relative Humidity :**	41~42%
Test Distance :	3m	**Polarization :**	Horizontal
Function Type :	GSM 1900 Idle + Bluetooth Idle + WLAN Idle + Adapter + Earphone + MPEG4		

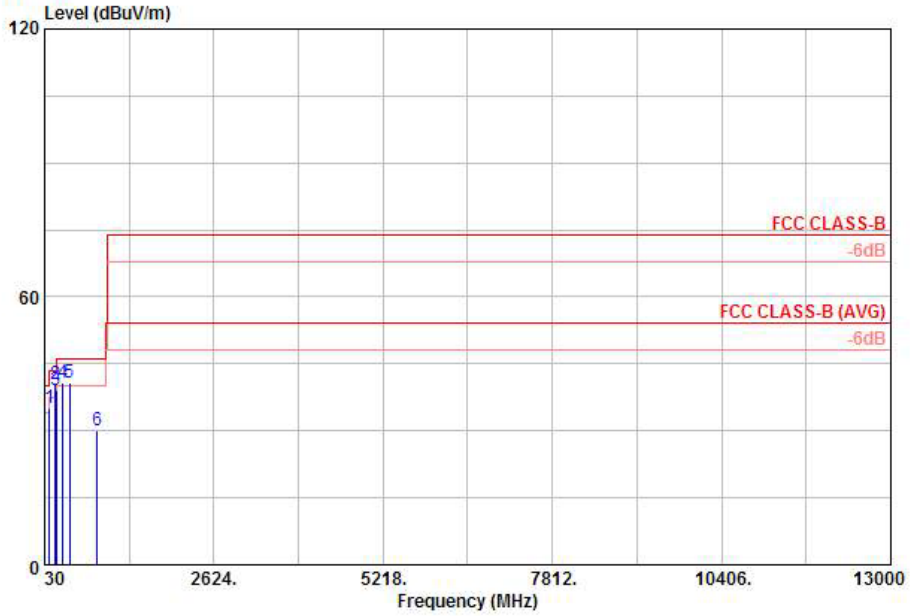

Site : 03CH01-KS
Condition: FCC CLASS-B 3m LF_ANT_100803 HORIZONTAL
Project : (FD) 1D2304
Mode : Mode 2

		Freq	Level	Over Limit	Limit Line	Read Level	Antenna Factor	Cable Loss	Preamp Factor	Ant Pos	Table Pos	Remark
		MHz	dBuV/m	dB	dBuV/m	dBuV	dB/m	dB	dB	cm	deg	
1		103.98	35.16	-8.34	43.50	53.69	11.01	0.42	29.96	---	---	Peak
2	!	190.65	40.37	-3.13	43.50	61.19	8.55	0.58	29.95	100	360	QP
3	!	208.20	39.20	-4.30	43.50	59.21	9.39	0.60	30.00	---	---	Peak
4	!	311.90	40.83	-5.17	46.00	56.74	13.30	0.74	29.95	---	---	Peak
5	!	415.50	40.76	-5.24	46.00	53.64	16.08	0.86	29.82	---	---	Peak
6		832.70	30.16	-15.84	46.00	38.21	20.32	1.27	29.64	---	---	Peak

Test Mode :	Mode 2	**Temperature :**	20~21˚C
Test Engineer :	Jack Li	**Relative Humidity :**	41~42%
Test Distance :	3m	**Polarization :**	Vertical
Function Type :	GSM 1900 Idle + Bluetooth Idle + WLAN Idle + Adapter + Earphone + MPEG4		

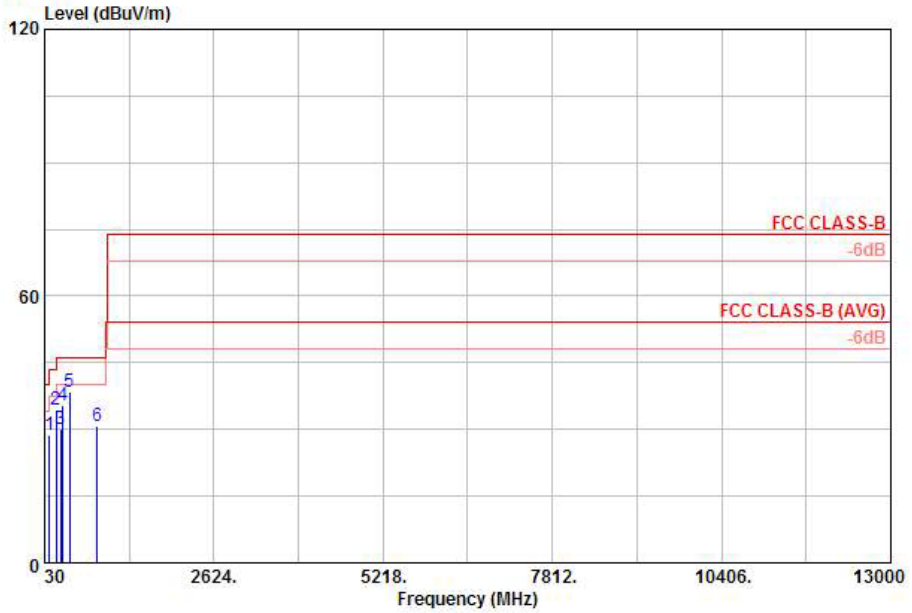

Site : 03CH01-KS
Condition: FCC CLASS-B 3m LF_ANT_100803 VERTICAL
Project : (FD) 1D2304
Mode : Mode 2

	Freq	Level	Over Limit	Limit Line	Read Level	Antenna Factor	Cable Loss	Preamp Factor	Ant Pos	Table Pos	Remark
	MHz	dBuV/m	dB	dBuV/m	dBuV	dB/m	dB	dB	cm	deg	
1	103.98	28.62	-14.88	43.50	47.15	11.01	0.42	29.96	---	---	Peak
2	208.20	34.57	-8.93	43.50	54.58	9.39	0.60	30.00	---	---	Peak
3	277.59	30.10	-15.90	46.00	46.76	12.58	0.70	29.94	---	---	Peak
4	311.90	35.29	-10.71	46.00	51.20	13.30	0.74	29.95	---	---	Peak
5	415.50	38.48	-7.52	46.00	51.36	16.08	0.86	29.82	100	0	Peak
6	832.70	30.73	-15.27	46.00	38.78	20.32	1.27	29.64	---	---	Peak

Test Mode :	Mode 4	**Temperature :**	20~21°C
Test Engineer :	Jack Li	**Relative Humidity :**	41~42%
Test Distance :	3m	**Polarization :**	Horizontal
Function Type :	GSM 1900 Idle + Bluetooth Idle + WLAN Idle + USB Cable (Link with PC) + Earphone		

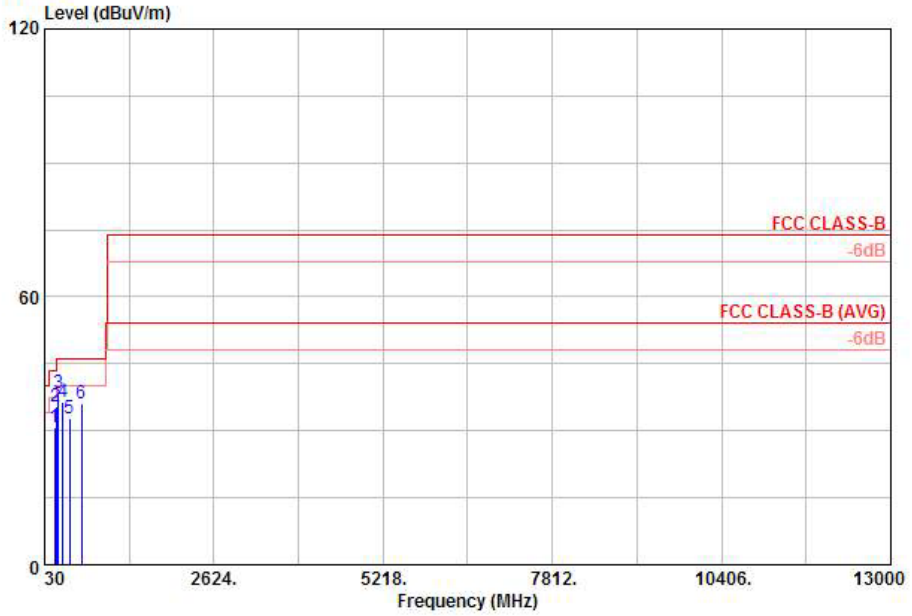

Site : 03CH01-KS
Condition: FCC CLASS-B 3m LF_ANT_100803 HORIZONTAL
Project : (FD) 1D2304

	Freq	Level	Over Limit	Limit Line	Read Level	Antenna Factor	Cable Loss	Preamp Factor	Ant Pos	Table Pos	Remark
	MHz	dBuV/m	dB	dBuV/m	dBuV	dB/m	dB	dB	cm	deg	
1	184.98	30.62	-12.88	43.50	51.51	8.45	0.57	29.91	---	---	Peak
2	208.20	35.36	-8.14	43.50	55.37	9.39	0.60	30.00	---	---	Peak
3	240.06	38.48	-7.52	46.00	56.08	11.56	0.66	29.82	102	349	Peak
4	311.90	36.45	-9.55	46.00	52.36	13.30	0.74	29.95	---	---	Peak
5	415.50	32.63	-13.37	46.00	45.51	16.08	0.86	29.82	---	---	Peak
6	594.00	36.06	-9.94	46.00	46.04	18.59	1.06	29.63	---	---	Peak

Test Mode :	Mode 4	**Temperature :**	20~21°C
Test Engineer :	Jack Li	**Relative Humidity :**	41~42%
Test Distance :	3m	**Polarization :**	Vertical
Function Type :	GSM 1900 Idle + Bluetooth Idle + WLAN Idle + USB Cable (Link with PC) + Earphone		

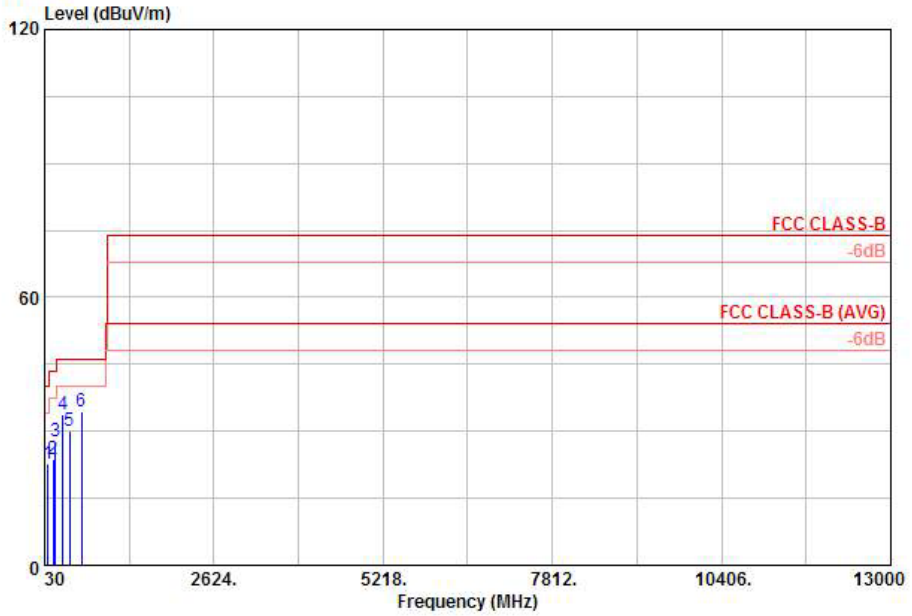

Site : 03CH01-KS
Condition: FCC CLASS-B 3m LF_ANT_100803 VERTICAL
Project : (FD) 1D2304

	Freq	Level	Over Limit	Limit Line	Read Level	Antenna Factor	Cable Loss	Preamp Factor	Ant Pos	Table Pos	Remark
	MHz	dBuV/m	dB	dBuV/m	dBuV	dB/m	dB	dB	cm	deg	
1	78.06	22.65	-17.35	40.00	46.01	6.34	0.35	30.05	---	---	Peak
2	160.14	23.57	-19.93	43.50	43.38	9.60	0.53	29.94	---	---	Peak
3	200.10	27.58	-15.92	43.50	48.00	9.00	0.59	30.01	---	---	Peak
4	311.90	33.72	-12.28	46.00	49.63	13.30	0.74	29.95	---	---	Peak
5	415.50	30.19	-15.81	46.00	43.07	16.08	0.86	29.82	---	---	Peak
6	594.00	34.41	-11.59	46.00	44.39	18.59	1.06	29.63	200	0	Peak

4. List of Measuring Equipment

Instrument	Manufacturer	Model No.	Serial No.	Characteristics	Calibration Date	Test Date	Due Date	Remark
EMI Receiver	R&S	ESCI7	100768	9kHz~7GHz	Jun. 02, 2011	Jan. 05, 2012	Jun. 01, 2012	Conduction (CO01-KS)
LISN	MessTec	AN3016	60103	9kHz~30MHz	Dec. 30, 2011	Jan. 05, 2012	Dec. 29, 2012	Conduction (CO01-KS)
LISN	MessTec	AN3016	60105	9kHz~30MHz	Dec. 30, 2011	Jan. 05, 2012	Dec. 29, 2012	Conduction (CO01-KS)
AC Power Source	Chroma	61602	ABP000000811	N/A	Nov. 16, 2011	Jan. 05, 2012	Nov. 15, 2012	Conduction (CO01-KS)
System Simulator	R&S	CMU200	837587/066	2G Full-Band	Dec. 30, 2011	Jan. 05, 2012	Dec. 29, 2012	Conduction (CO01-KS)
EMI Test Receiver	R&S	ESCI	100534	9kHz~3GHz	Nov. 09, 2011	Feb. 13, 2012	Nov. 08, 2012	Radiation (03CH01-KS)
Spectrum Analyzer	R&S	FSP40	100319	9kHz~40GHz	Dec. 30, 2011	Feb. 13, 2012	Dec. 29, 2012	Radiation (03CH01-KS)
Bilog Antenna	SCHAFFNER	CBL6112D	23182	25MHz~2GHz	Dec. 08, 2011	Feb. 13, 2012	Dec. 07, 2012	Radiation (03CH01-KS)
Loop Antenna	R&S	HFH2-Z2	860004/00	9 kHz~30 MHz	Jul. 28, 2011	Feb. 13, 2012	Jul. 27, 2012	Radiation (03CH01-KS)
Double Ridge Horn Antenna	EMCO	3117	00075959	1GHz~18GHz	Jan. 06, 2012	Feb. 13, 2012	Jan. 05, 2013	Radiation (03CH01-KS)
Amplifier	Wireless	FPA-6592G	060007	30MHz~2GHz	Dec. 30, 2011	Feb. 13, 2012	Dec. 29, 2012	Radiation (03CH01-KS)
Amplifier	Agilent	8449B	3008A02370	1GHz~26.5GHz	Dec. 30, 2011	Feb. 13, 2012	Dec. 29, 2012	Radiation (03CH01-KS)
Active Horn Antenna	com-power	AHA-118	701023	1GHz~18GHz	Nov. 07, 2011	Feb. 13, 2012	Nov. 06, 2012	Radiation (03CH01-KS)
Signal Generator	R&S	SMR40	100455	10GHz~40GHz	Dec. 30, 2011	Feb. 13, 2012	Dec. 29, 2012	Radiation (03CH01-KS)
SHE-EHF Horn	Schwarzbeck	BBHA9170	BBHA170249	15GHz~40GHz	Oct. 11, 2011	Feb. 13, 2012	Oct. 10, 2012	Radiation (03CH01-KS)
System Simulator	R&S	CMU200	837587/066	2G Full-Band	Dec. 30, 2011	Feb. 13, 2012	Dec. 29, 2012	Radiation (03CH01-KS)

5. Uncertainty of Evaluation

Uncertainty of Conducted Emission Measurement (150 kHz ~ 30 MHz)

Contribution	Uncertainty of X_i		$u(X_i)$
	dB	Probability Distribution	
Receiver Reading	0.10	Normal (k=2)	0.05
Cable Loss	0.10	Normal (k=2)	0.05
AMN Insertion Loss	2.50	Rectangular	0.63
Receiver Specification	1.50	Rectangular	0.43
Site Imperfection	1.39	Rectangular	0.80
Mismatch	+0.34 / -0.35	U-Shape	0.24
Combined Standard Uncertainty Uc(y)	**1.13**		
Measuring Uncertainty for a Level of Confidence of 95% (U = 2Uc(y))	**2.26**		

Uncertainty of Radiated Emission Measurement (30 MHz ~ 1000 MHz)

Contribution	Uncertainty of X_i		$u(X_i)$
	dB	Probability Distribution	
Receiver Reading	0.41	Normal (k=2)	0.21
Antenna Factor Calibration	0.83	Normal (k=2)	0.42
Cable Loss Calibration	0.25	Normal (k=2)	0.13
Pre-Amplifier Gain Calibration	0.27	Normal (k=2)	0.14
RCV/SPA Specification	2.50	Rectangular	0.72
Antenna Factor Interpolation for Frequency	1.00	Rectangular	0.29
Site Imperfection	1.43	Rectangular	0.83
Mismatch	+0.39 / -0.41	U-Shape	0.28
Combined Standard Uncertainty Uc(y)	**1.27**		
Measuring Uncertainty for a Level of Confidence of 95% (U = 2Uc(y))	**2.54**		

Uncertainty of Radiated Emission Measurement (1 GHz ~ 40 GHz)

Contribution	Uncertainty of X_i		$u(X_i)$	C_i	$C_i * u(X_i)$
	dB	Probability Distribution			
Receiver Reading	±0.10	Normal (k=2)	0.10	1	0.10
Antenna Factor Calibration	±1.70	Normal (k=2)	0.85	1	0.85
Cable Loss Calibration	±0.50	Normal (k=2)	0.25	1	0.25
Receiver Correction	±2.00	Rectangular	1.15	1	1.15
Antenna Factor Directional	±1.50	Rectangular	0.87	1	0.87
Site Imperfection	±2.80	Triangular	1.14	1	1.14
Mismatch Receiver VSWR Γ1 = 0.197 Antenna VSWR Γ2 = 0.194 Uncertainty = 20Log(1-Γ1*Γ2)	+0.34 / -0.35	U-Shape	0.244	1	0.244
Combined Standard Uncertainty Uc(y)	**2.36**				
Measuring Uncertainty for a Level of Confidence of 95% (U = 2Uc(y))	**4.72**				

Appendix A. Photographs of EUT

Please refer to Sporton report number EP1D2304 as below.