FCC RF Test Report

APPLICANT	:	BLU Products, Inc.
EQUIPMENT	:	Mobile phone
BRAND NAME	:	BLU
MODEL NAME	:	S1, VIVO S
MARKETING NAME	:	BLU S1
FCC ID	:	YHLBLUS1
STANDARD	:	FCC 47 CFR Part 2, and 90(S)
CLASSIFICATION	:	PCS Licensed Transmitter Held to Ear (PCE)

The product was received on Jun. 13, 2017 and testing was completed on Jun. 28, 2017. We, Sporton International (ShenZhen) INC., would like to declare that the tested sample has been evaluated in accordance with the procedures given in ANSI / TIA / EIA-603-D-2010 and shown compliance with the applicable technical standards.

The test results in this report apply exclusively to the tested model / sample. Without written approval of Sporton International (ShenZhen) INC., the test report shall not be reproduced except in full.

Prepared by: Eric Shih / Manager

Approved by: Jones Tsai / Manager

Testing Laboratory
2353

SPORTON International (ShenZhen) INC.

1/F, 2/F, Bldg 5, Shiling Industrial Zone, Xinwei Village, Xili, Nanshan District, Shenzhen City, Guangdong Province, China

TABLE OF CONTENTS

1 GENERAL DESCRIPTION 5
1.1. Applicant 5
1.2. Manufacturer 5
1.3. Feature of Equipment Under Test 5
1.4. Product Specification of Equipment Under Test 6
1.5. Modification of EUT 6
1.6. Maximum Frequency Tolerance, Emission Designator and Conducted Power 6
1.7. Testing Site 7
1.8. Applied Standards 7

2 TEST CONFIGURATION OF EQUIPMENT UNDER TEST 8
2.1 Test Mode 8
2.2 Connection Diagram of Test System 8
2.3 Support Unit used in test configuration and system 8
2.4 Measurement Results Explanation Example 9

3 TEST RESULT 10
3.1 Conducted Output Power Measurement 10
3.2 99% Occupied Bandwidth and 26dB Bandwidth Measurement 12
3.3 Emissions Mask Measurement 17
3.4 Emissions Mask – Out Of Band Emissions Measurement 19
3.5 Field Strength of Spurious Radiation Measurement 22
3.6 Frequency Stability Measurement 25

4 LIST OF MEASURING EQUIPMENT 28

5 UNCERTAINTY OF EVALUATION 29

APPENDIX A. SETUP PHOTOGRAPHS

REVISION HISTORY

REPORT NO.	VERSION	DESCRIPTION	ISSUED DATE
FW761305A	Rev. 01	Initial issue of report	Jul. 12, 2017

SUMMARY OF TEST RESULT

Report Section	FCC Rule	Description	Limit	Result	Remark
3.1	§2.1046	Conducted Output Power	Reporting only	PASS	-
3.2	§2.1049 §90.209	99% Occupied Bandwidth and 26dB Bandwidth	Reporting only	PASS	-
3.3	§2.1051 §90.691	Emission masks – In-band emissions	< $50+10\log_{10}$(P[Watts])	PASS	-
3.4	§2.1051 §90.691	Emission masks – Out of band emissions	< $43+10\log_{10}$(P[Watts])	PASS	-
3.5	§2.1053 §90.691	Field Strength of Spurious Radiation	< $43+10\log_{10}$(P[Watts])	PASS	Under limit 50.56 dB at 3282.000 MHz
3.6	§2.1055 §90.213	Frequency Stability for Temperature & Voltage	< 2.5 ppm	PASS	-

1 General Description

1.1. Applicant

BLU Products, Inc.
10814 NW 33rd St # 100 Doral, FL 33172

1.2. Manufacturer

BLU Products, Inc.
10814 NW 33rd St # 100 Doral, FL 33172

1.3. Feature of Equipment Under Test

Product Feature & Specification	
Equipment	Mobile phone
Brand Name	BLU
Model Name	S1, VIVO S
FCC ID	YHLBLUS1
Marketing Name	BLU S1
EUT supports Radios application	CDMA/EV-DO/GSM/GPRS/EGPRS/WCDMA/HSPA/ DC-HSDPA/HSPA+/LTE/ WLAN 2.4GHz 802.11b/g/n HT20/HT40/ Bluetooth v3.0+EDR/ Bluetooth v4.1LE
IMEI Code	Conducted: 990010370000326 Radiation: 990010370002827
HW Version	S01
SW Version	BLU_S0330WW_V7.0.01.00_GENERIC
EUT Stage	Pre-Production

1.4. Product Specification of Equipment Under Test

Product Specification subjective to this standard	
Tx Frequency	CDMA2000 BC10 : 817.9 MHz ~ 823.1 MHz
Rx Frequency	CDMA2000 BC10 : 862.9 MHz ~ 868.1 MHz
Maximum Output Power to Antenna	CDMA2000 BC10 : 23.46 dBm
Antenna Type	Loop Antenna
Type of Modulation	CDMA2000 1xRTT : QPSK CDMA2000 1xEV-DO : QPSK/8PSK

Remark: This test report recorded only product characteristics and test results of PCS Licensed Transmitter Held to Ear (PCE).

1.5. Modification of EUT

No modifications are made to the EUT during all test items.

1.6. Maximum Frequency Tolerance, Emission Designator and Conducted Power

FCC Rule	System	Type of Modulation	Frequency Tolerance (ppm)	Emission Designator	Maximum Conducted power(W)
Part 90S	CDMA2000 BC10 1xRTT	QPSK	0.0211 ppm	1M27F9W	0.2218

1.7. Testing Site

Test Site	SPORTON International (ShenZhen) INC.	
Test Site Location	1/F, 2/F, Bldg 5, Shiling Industrial Zone, Xinwei Village, Xili, Nanshan District, Shenzhen City, Guangdong Province, China TEL: +86-755-8637-9589 FAX: +86-755-8637-9595	
Test Site No.	**Sporton Site No.**	
	TH01-SZ	

Test Site	SPORTON International (ShenZhen) INC.	
Test Site Location	No. 3 Building, the third floor of south, Shahe River west, Fengzeyuan warehouse, Nanshan District, Shenzhen, Guangdong, P. R. China TEL: +86-755- 3320-2398	
Test Site No.	**Sporton Site No.**	**FCC Registration No.**
	03CH03-SZ	565805

Note: The test site complies with ANSI C63.4 2014 requirement.

1.8. Applied Standards

According to the specifications of the manufacturer, the EUT must comply with the requirements of the following standards:

- FCC 47 CFR Part 2, 90
- ANSI / TIA / EIA-603-D-2010

Remark:

1. All test items were verified and recorded according to the standards and without any deviation during the test.
2. This EUT has also been tested and complied with the requirements of FCC Part 15, Subpart B, recorded in a separate test report.

2 Test Configuration of Equipment Under Test

2.1 Test Mode

During all testing, EUT is in link mode with base station emulator at maximum power level. The spurious emission measurements were carried out in semi-anechoic chamber with 3-meter test range, and EUT is rotated on three test planes to find out the worst emission.

Frequency range investigated for radiated emission: 30MHz to 10th harmonic.

Test Modes		
Band	**Radiated TCs**	**Conducted TCs**
CDMA2000 BC10	■ 1xRTT Link	■ 1xRTT Link

Note: The maximum RF output power levels are 1xRTT RC3 SO32 mode for CDMA2000 BC10 on QPSK Link; only these modes were used for all tests.

2.2 Connection Diagram of Test System

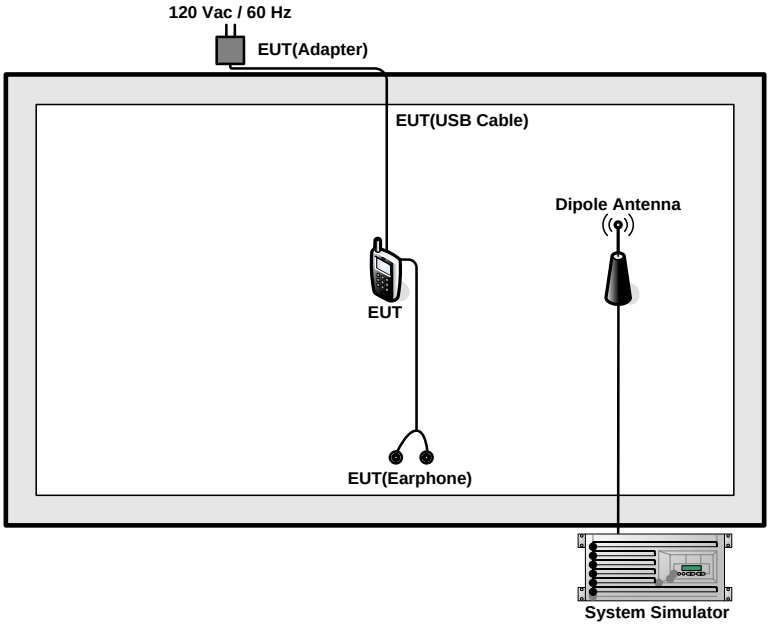

2.3 Support Unit used in test configuration and system

Item	Equipment	Trade Name	Model No.	FCC ID	Data Cable	Power Cord
1.	System Simulator	R&S	CMU 200	N/A	N/A	Unshielded, 1.8 m
2.	DC Power Supply	GW INSTEK	GPS-3030D	N/A	N/A	Unshielded, 1.8 m

2.4 Measurement Results Explanation Example

For all conducted test items:

The offset level is set in the spectrum analyzer to compensate the RF cable loss and attenuator factor between EUT conducted output port and spectrum analyzer. With the offset compensation, the spectrum analyzer reading level is exactly the EUT RF output level.

Example:

The spectrum analyzer offset is derived from RF cable loss and attenuator factor.

Offset = RF cable loss + attenuator factor.

Following shows an offset computation example with cable loss 4.0 dB and 10dB attenuator.

Offset (dB) = RF cable loss (dB) + attenuator factor (dB).

= 4.0 + 10 = 14.0 (dB)

3 Test Result

3.1 Conducted Output Power Measurement

3.1.1 Description of the Conducted Output Power Measurement

A base station simulator was used to establish communication with the EUT. Its parameters were set to transmit the maximum power on the EUT. The measured power in the radio frequency on the transmitter output terminals shall be reported.

3.1.2 Measuring Instruments

The measuring equipment is listed in the section 4 of this test report.

3.1.3 Test Procedures

1. The transmitter output port was connected to base station.
2. Set EUT at maximum power through base station.
3. Select lowest, middle, and highest channels for each band and different modulation.

3.1.4 Test Setup

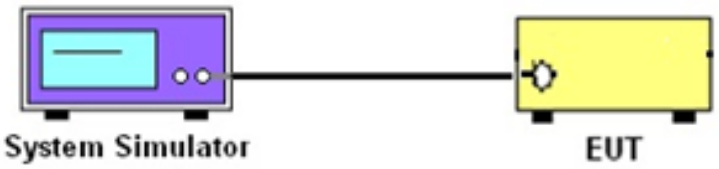

3.1.5 Test Result of Conducted Output Power

Conducted Power (*Unit: dBm)			
Band	**CDMA2000 BC10**		
Channel	**476**	**580**	**684**
Frequency	**817.9**	**820.5**	**823.1**
1xRTT RC1+SO55	23.22	23.20	23.04
1xRTT RC3+SO55	23.43	23.45	23.34
1xRTT RC3 SO32(+ F-SCH)	23.44	**23.46**	23.35
1xRTT RC3 SO32 (+SCH)	23.07	23.04	22.92
1xEVDO RTAP 153.6Kbps	23.35	23.34	23.30
1xEVDO RETAP 4096Bits	23.31	23.30	23.25

Note: Maximum burst average power for CDMA.

3.2 99% Occupied Bandwidth and 26dB Bandwidth Measurement

3.2.1 Description of (Occupied) Bandwidth Limitations Measurement

The 99% occupied bandwidth is the width of a frequency band such that, below the lower and above the upper frequency limits, the mean powers emitted are each equal to a specified percentage 0.5% of the total mean transmitted power.

The emission bandwidth is defined as the width of the signal between two points, located at the 2 sides of the carrier frequency, outside of which all emissions are attenuated at least 26 dB below the transmitter power.

3.2.2 Measuring Instruments

The measuring equipment is listed in the section 4 of this test report.

3.2.3 Test Procedures

1. The EUT was connected to Spectrum Analyzer and Base Station via power divider.
2. The 99% and 26 dB occupied bandwidth (BW) of the middle channel for the highest RF powers were measured.

3.2.4 Test Setup

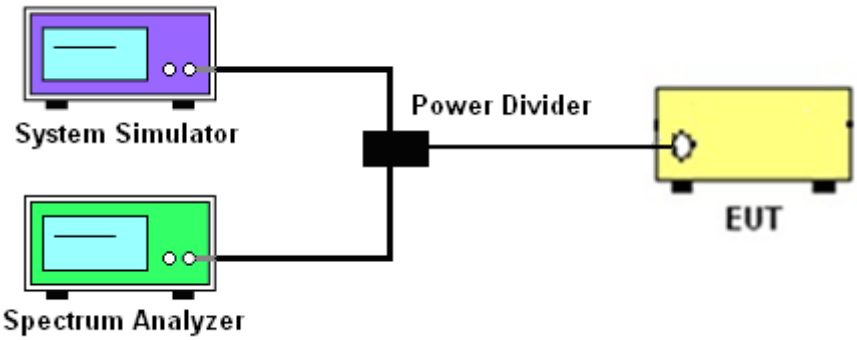

3.2.5 Test Result of 99% Occupied Bandwidth and 26dB Bandwidth

CDMA2000 BC10			
Test Mode	**CDMA 2000 1xRTT**		
Test Status	**RC3 SO32 (F+SCH)**		
Channel	**476 (Low)**	**580 (Mid)**	**684 (High)**
Frequency (MHz)	**817.9**	**820.5**	**823.1**
99% OBW (MHz)	1.27	1.27	1.27
26dB BW (MHz)	1.43	1.43	1.43

3.2.6 Test Result (Plots) of 99% Occupied Bandwidth and 26dB Bandwidth

Band :	CDMA2000 BC 10	Test Mode :	1xRTT_RC3 SO32

99% Occupied Bandwidth Plot on Channel 476 (817.9MHz)

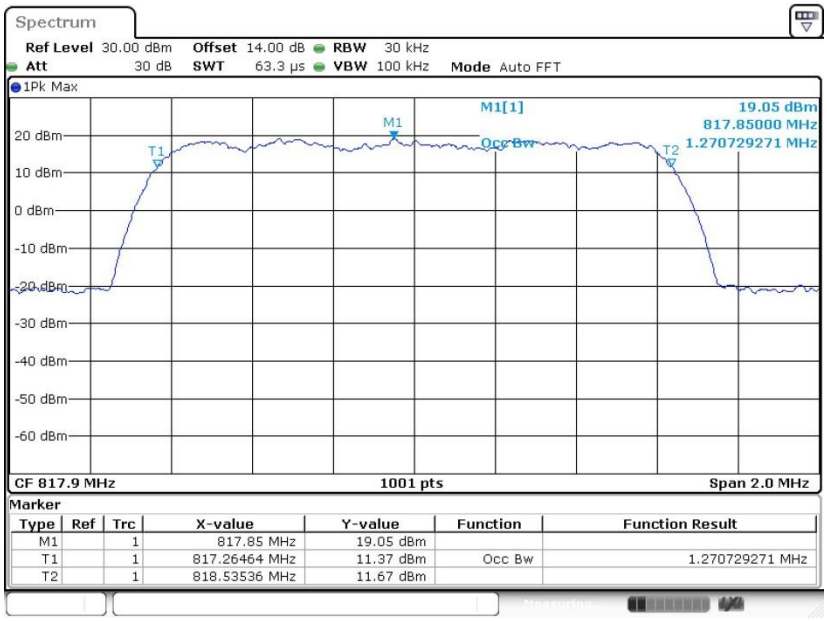

Date: 19.JUN.2017 15:20:01

26dB Bandwidth Plot on Channel 476 (817.9MHz)

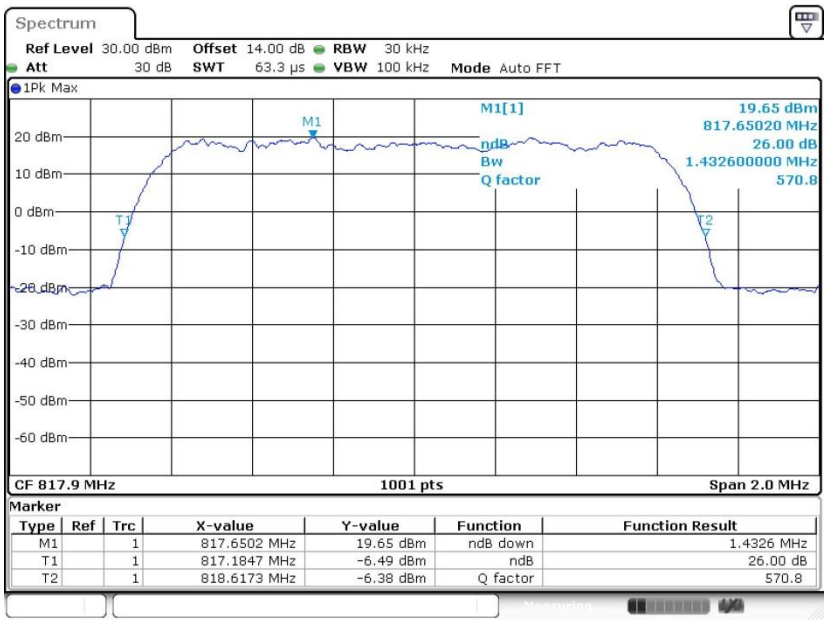

Date: 19.JUN.2017 15:17:24

99% Occupied Bandwidth Plot on Channel 580 (820.5MHz)

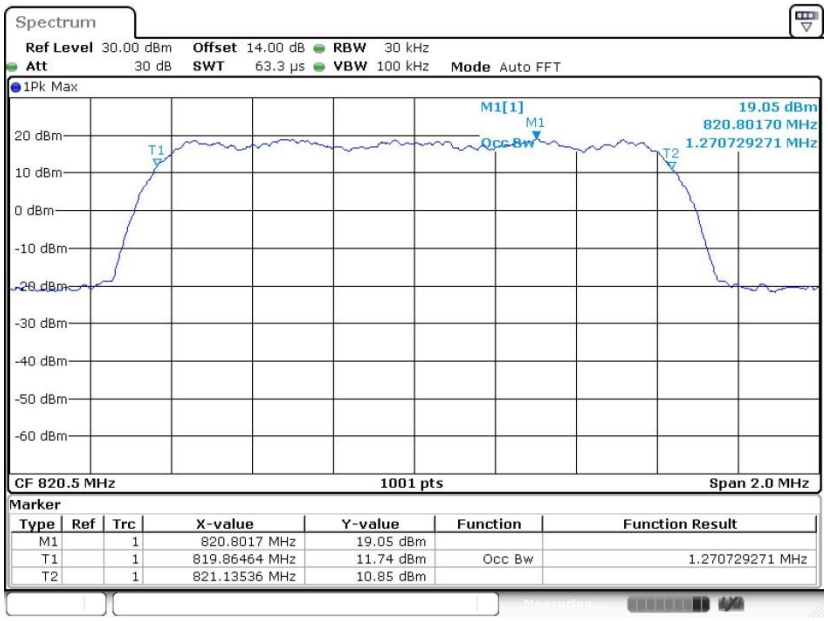

Date: 19.JUN.2017 15:20:52

26dB Bandwidth Plot on Channel 580 (820.5MHz)

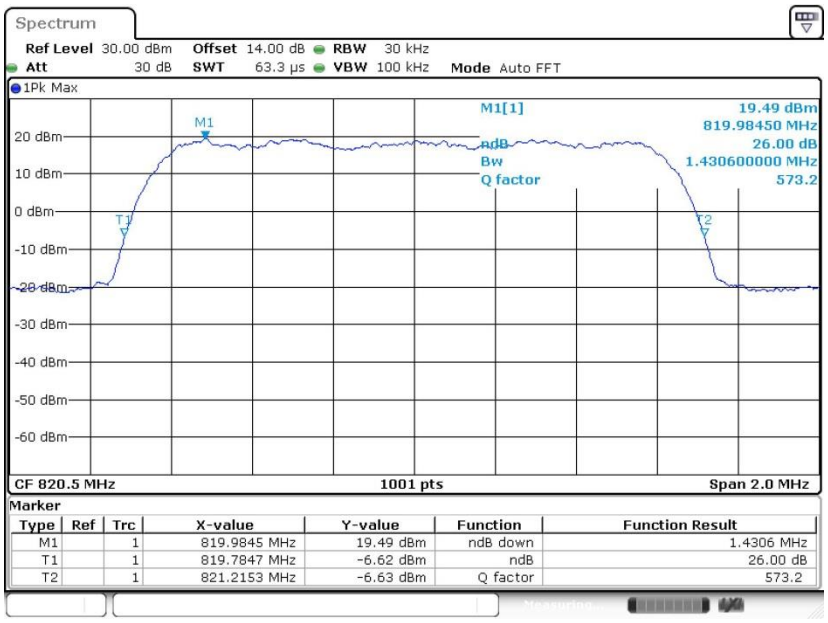

Date: 19.JUN.2017 15:18:00

99% Occupied Bandwidth Plot on Channel 684 (823.1MHz)

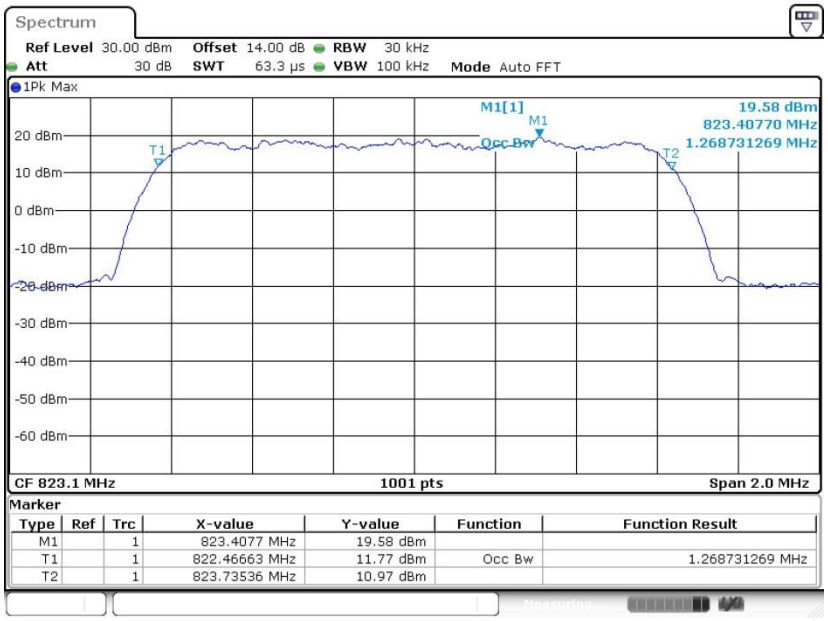

Date: 19.JUN.2017 15:21:31

26dB Bandwidth Plot on Channel 684 (823.1MHz)

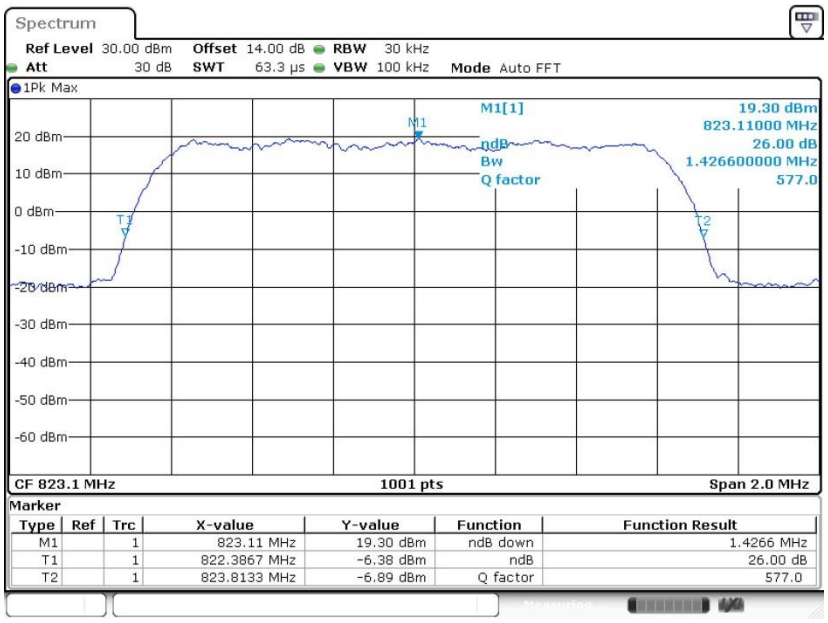

Date: 19.JUN.2017 15:19:22

3.3 Emissions Mask Measurement

3.3.1 Description of Emissions Mask Measurement

Equipment used in this licensed to EA or non-EA systems shall comply with the emission mask provisions of FCC Part 90.691.(a)(1)

(a). Out-of-band emission requirement shall apply only to the "outer" channels included in an EA license and to spectrum adjacent to interior channels used by incumbent licensees. The emission limits are as follows:

(1) For any frequency removed from the EA licensee's frequency block by up to and including 37.5 kHz, the power of any emission shall be attenuated below the transmitter power (P) in watts by at least 116 Log10(f/6.1) decibels or 50 + 10 Log10(P) decibels or 80 decibels, whichever is the lesser attenuation, where f is the frequency removed from the center of the outer channel in the block in kilohertz and where f is greater than 12.5 kHz.

3.3.2 Measuring Instruments

The measuring equipment is listed in the section 4 of this test report.

3.3.3 Test Procedures

1. The EUT was connected to spectrum analyzer and base station via power divider.
2. The emissions mask of low and high channels for the highest RF powers were measured.
3. The RBW was set 1% of 99% Occupied Bandwidth, and VBW was set 3 times of RBW.
4. The final test results were shown below plots with a correction offset factor including cable loss, insertion loss of power divider.

3.3.4 Test Setup

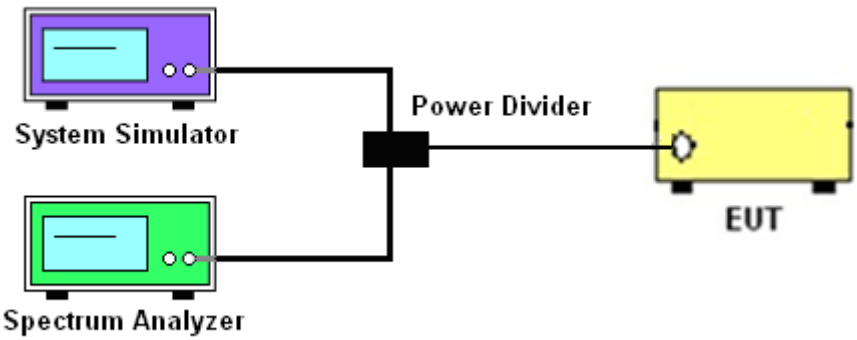

3.3.5 Test Result (Plots) of Conducted Emissions Mask

Band :	CDMA2000 BC10	Test Mode :	1xRTT_RC3 SO32

Lower Band Edge Plot on Channel 476 (817.9MHz)

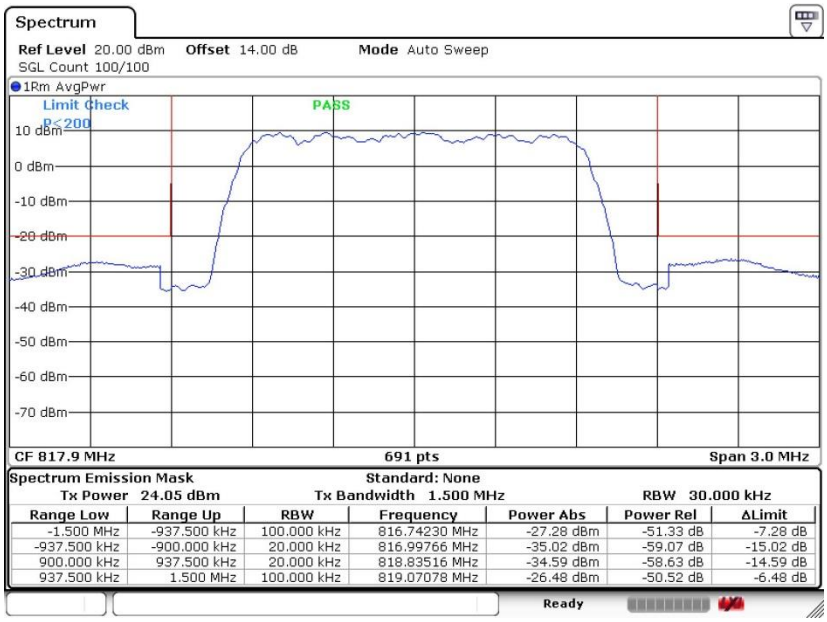

Date: 20.JUN.2017 18:28:29

Higher Band Edge Plot on Channel 684 (823.1MHz)

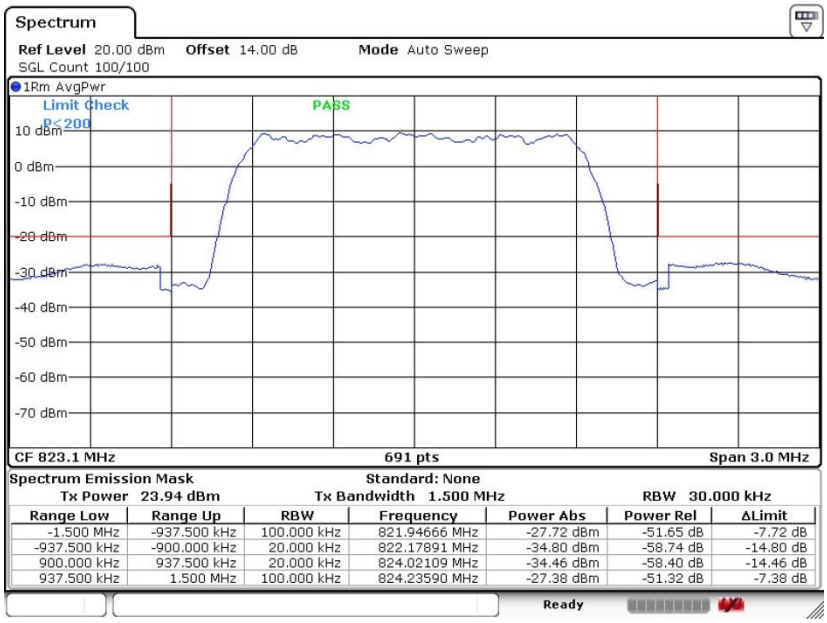

Date: 20.JUN.2017 18:27:54

3.4 Emissions Mask – Out Of Band Emissions Measurement

3.4.1 Description of Conducted Emissions Out of band emissions measurement

The power of any emission FCC Part 90.691 (a)(2) on any frequency removed from the assigned frequency by more than 250 percent of the authorized bandwidth at least 43 + 10 log (P) dB. It is measured by means of a calibrated spectrum analyzer and scanned from 30MHz up to a frequency including its 10th harmonic.

3.4.2 Measuring Instruments

The measuring equipment is listed in the section 4 of this test report.

3.4.3 Test Procedures

1. The EUT was connected to spectrum analyzer and base station via power divider.
2. The middle channel for the highest RF power within the transmitting frequency was measured.
3. The conducted spurious emission for the whole frequency range was taken.
4. The final test results were shown below plots with a correction offset factor including cable loss, insertion loss of power divider.

3.4.4 Test Setup

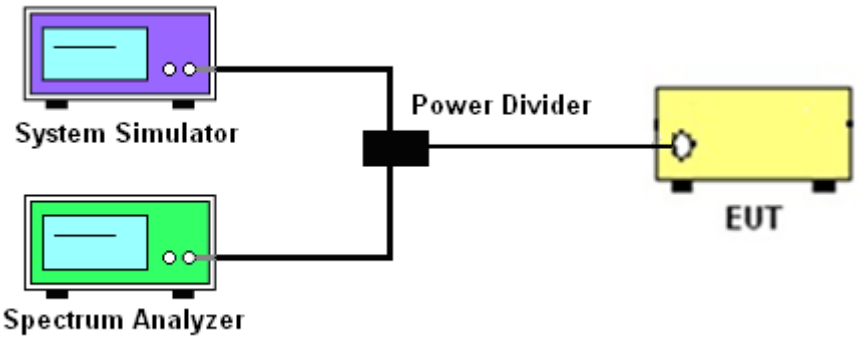

3.4.5 Test Result (Plots) of Conducted Emission

Band :	CDMA2000 BC10	Test Mode :	1xRTT_RC3 SO32

Conducted Emission Plot between on Channel 476 (817.9MHz)

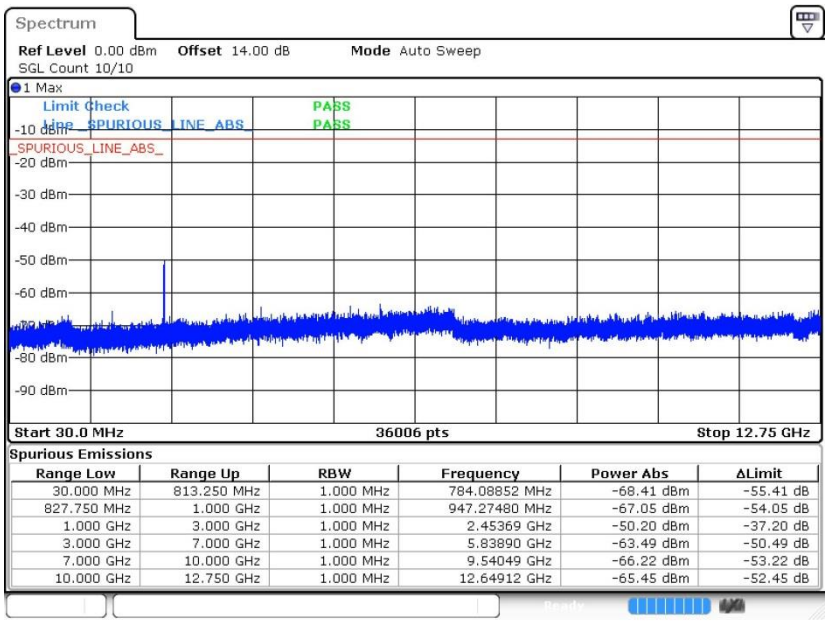

Spurious Emissions

Range Low	Range Up	RBW	Frequency	Power Abs	ΔLimit
30.000 MHz	813.250 MHz	1.000 MHz	784.08852 MHz	-68.41 dBm	-55.41 dB
827.750 MHz	1.000 GHz	1.000 MHz	947.27480 MHz	-67.05 dBm	-54.05 dB
1.000 GHz	3.000 GHz	1.000 MHz	2.45369 GHz	-50.20 dBm	-37.20 dB
3.000 GHz	7.000 GHz	1.000 MHz	5.83890 GHz	-63.49 dBm	-50.49 dB
7.000 GHz	10.000 GHz	1.000 MHz	9.54049 GHz	-66.22 dBm	-53.22 dB
10.000 GHz	12.750 GHz	1.000 MHz	12.64912 GHz	-65.45 dBm	-52.45 dB

Date: 21.JUN.2017 10:21:09

Conducted Emission Plot between on Channel 580 (820.5MHz)

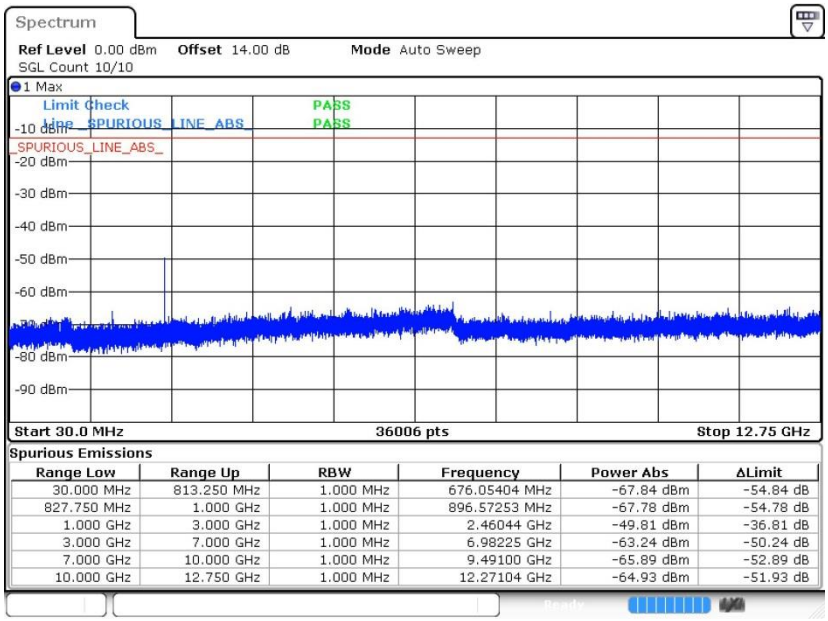

Spurious Emissions

Range Low	Range Up	RBW	Frequency	Power Abs	ΔLimit
30.000 MHz	813.250 MHz	1.000 MHz	676.05404 MHz	-67.84 dBm	-54.84 dB
827.750 MHz	1.000 GHz	1.000 MHz	896.57253 MHz	-67.78 dBm	-54.78 dB
1.000 GHz	3.000 GHz	1.000 MHz	2.46044 GHz	-49.81 dBm	-36.81 dB
3.000 GHz	7.000 GHz	1.000 MHz	6.98225 GHz	-63.24 dBm	-50.24 dB
7.000 GHz	10.000 GHz	1.000 MHz	9.49100 GHz	-65.89 dBm	-52.89 dB
10.000 GHz	12.750 GHz	1.000 MHz	12.27104 GHz	-64.93 dBm	-51.93 dB

Date: 21.JUN.2017 10:23:32

Conducted Emission Plot between on Channel 684 (823.1MHz)

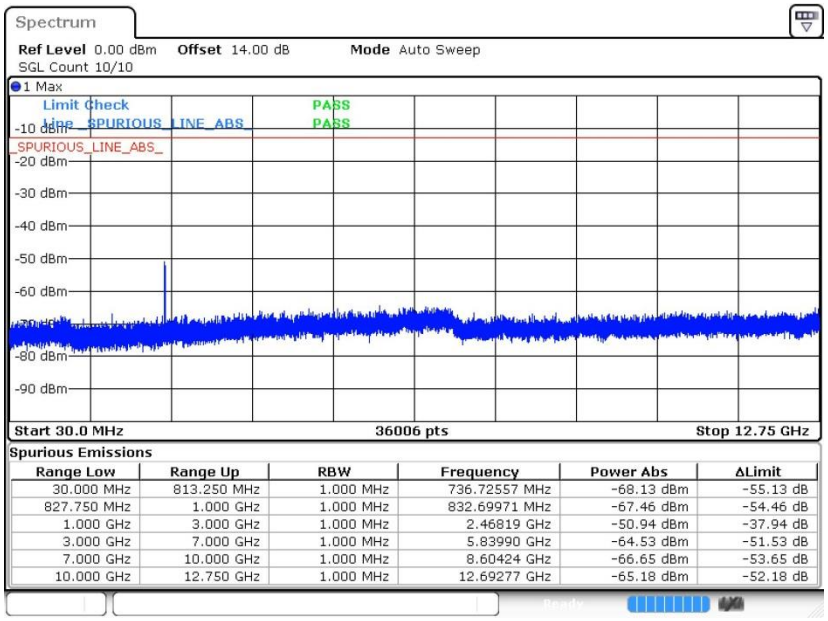

Spurious Emissions

Range Low	Range Up	RBW	Frequency	Power Abs	ΔLimit
30.000 MHz	813.250 MHz	1.000 MHz	736.72557 MHz	-68.13 dBm	-55.13 dB
827.750 MHz	1.000 GHz	1.000 MHz	832.69971 MHz	-67.46 dBm	-54.46 dB
1.000 GHz	3.000 GHz	1.000 MHz	2.46819 GHz	-50.94 dBm	-37.94 dB
3.000 GHz	7.000 GHz	1.000 MHz	5.83990 GHz	-64.53 dBm	-51.53 dB
7.000 GHz	10.000 GHz	1.000 MHz	8.60424 GHz	-66.65 dBm	-53.65 dB
10.000 GHz	12.750 GHz	1.000 MHz	12.69277 GHz	-65.18 dBm	-52.18 dB

Date: 21.JUN.2017 10:25:02

3.5 Field Strength of Spurious Radiation Measurement

3.5.1 Description of Field Strength of Spurious Radiated Measurement

The radiated spurious emission was measured by substitution method according to ANSI / TIA / EIA-603-D-2010. The power of any emission FCC Part 90.691 on any frequency removed from the assigned frequency by more than 250 percent of the authorized bandwidth at least 43 + 10 log (P) dB. The spectrum is scanned from 30 MHz up to a frequency including its 10th harmonic.

The power of any emission outside of the authorized operating frequency ranges must be attenuated below the transmitter power (P) by a factor of at least $43+10\log_{10}(P[Watts])$ dB. The spectrum is scanned from 30 MHz up to a frequency including its 10th harmonic.

3.5.2 Measuring Instruments

The measuring equipment is listed in the section 4 of this test report.

3.5.3 Test Procedures

1. The EUT was placed on a rotatable wooden table 0.8 meters for frequency below 1GHz and 1.5 meter for frequency above 1GHz above the ground.
2. The EUT was set 3 meters from the receiving antenna, which was mounted on the antenna tower.
3. The table was rotated 360 degrees to determine the position of the highest spurious emission.
4. The height of the receiving antenna is varied between one meter and four meters to search the maximum spurious emission for both horizontal and vertical polarizations.
5. Make the measurement with the spectrum analyzer's RBW = 1MHz, VBW = 3MHz, Sweep = 500ms, Taking the record of maximum spurious emission.
6. A horn antenna was substituted in place of the EUT and was driven by a signal generator.
7. Tune the output power of signal generator to the same emission level with EUT maximum spurious emission.
8. Taking the record of output power at antenna port.
9. Repeat step 7 to step 8 for another polarization.
10. EIRP (dBm) = S.G. Power – Tx Cable Loss + Tx Antenna Gain
11. ERP (dBm) = EIRP - 2.15
12. The RF fundamental frequency should be excluded against the limit line in the operating frequency band.
13. The limit line is derived from 43 + 10log(P) dB below the transmitter power P(Watts)
    = P(W) - [43 + 10log(P)] (dB)
    = [30 + 10log(P)] (dBm) - [43 + 10log(P)] (dB)
    = -13dBm.

3.5.4 Test Setup

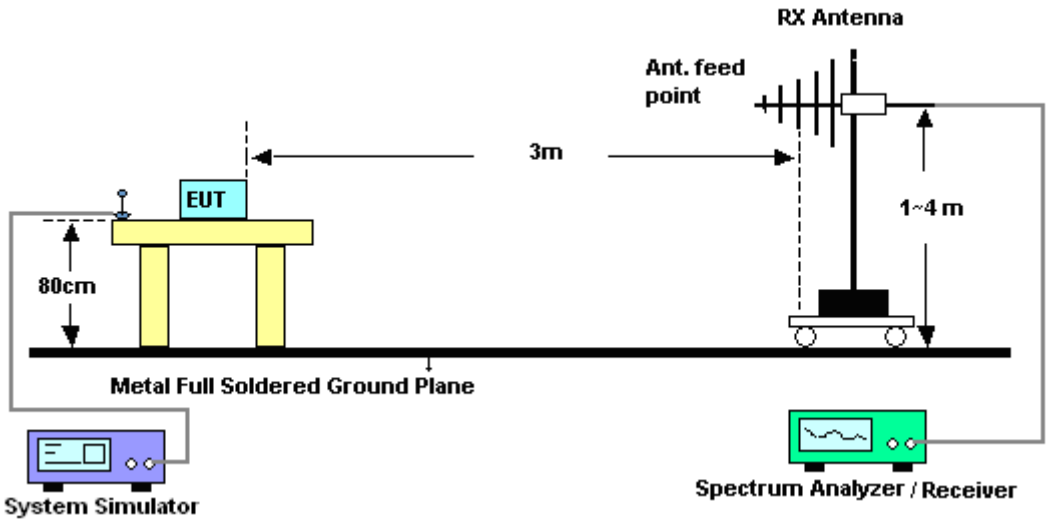

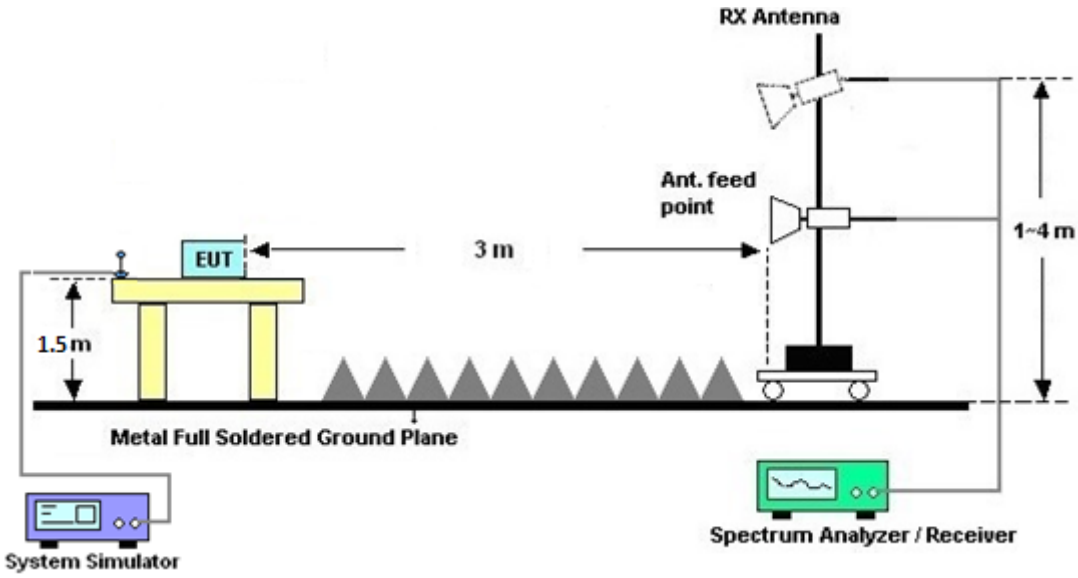

3.5.5 Test Result of Field Strength of Spurious Radiated

Band :	CDMA2000 BC10	**Temperature :**	22~25°C
Test Mode :	1xRTT_RC3 SO32	**Relative Humidity :**	48~52%
Test Engineer :	FuQuan Wu	**Polarization :**	Horizontal
Remark :	Spurious emissions within 30-1000MHz were found more than 20dB below limit line.		

Frequency (MHz)	ERP (dBm)	Limit (dBm)	Over Limit (dB)	SPA Reading (dBm)	S.G. Power (dBm)	TX Cable loss (dB)	TX Antenna Gain (dBi)	Polarization (H/V)	Result
1641	-68.20	-13	-55.20	-75.53	-74.89	0.56	9.40	H	Pass
2461.5	-65.23	-13	-52.23	-76.73	-72.94	0.74	10.60	H	Pass
3282	-63.56	-13	-50.56	-77.06	-73.16	0.85	12.60	H	Pass

Band :	CDMA2000 BC10	**Temperature :**	22~25°C
Test Mode :	1xRTT_RC3 SO32	**Relative Humidity :**	48~52%
Test Engineer :	FuQuan Wu	**Polarization :**	Vertical
Remark :	Spurious emissions within 30-1000MHz were found more than 20dB below limit line.		

Frequency (MHz)	ERP (dBm)	Limit (dBm)	Over Limit (dB)	SPA Reading (dBm)	S.G. Power (dBm)	TX Cable loss (dB)	TX Antenna Gain (dBi)	Polarization (H/V)	Result
1641	-67.98	-13	-54.98	-75.36	-74.67	0.56	9.40	V	Pass
2461.5	-65.36	-13	-52.36	-76.45	-73.07	0.74	10.60	V	Pass
3282	-63.64	-13	-50.64	-77.31	-73.24	0.85	12.60	V	Pass

3.6 Frequency Stability Measurement

3.6.1 Description of Frequency Stability Measurement

The frequency stability shall be measured by variation of ambient temperature and variation of primary supply voltage to ensure that the fundamental emission stays within the authorized frequency block. The frequency stability of the transmitter shall be maintained within ±0.00025% (±2.5ppm) of the center frequency according to FCC Part 90.213.

3.6.2 Measuring Instruments

The measuring equipment is listed in the section 4 of this test report.

3.6.3 Test Procedures for Temperature Variation

1. The EUT was set up in the thermal chamber and connected with the base station.
2. With power OFF, the temperature was decreased to -30°C and the EUT was stabilized for three hours. Power was applied and the maximum change in frequency was recorded within one minute.
3. With power OFF, the temperature was raised in 10°C step up to 50°C. The EUT was stabilized at each step for at least half an hour. Power was applied and the maximum frequency change was recorded within one minute.

3.6.4 Test Procedures for Voltage Variation

1. The EUT was placed in a temperature chamber at 25±5° C and connected with the base station.
2. The power supply voltage to the EUT was varied from BEP to 115% of the nominal value measured at the input to the EUT.
3. The variation in frequency was measured for the worst case.

3.6.5 Test Setup

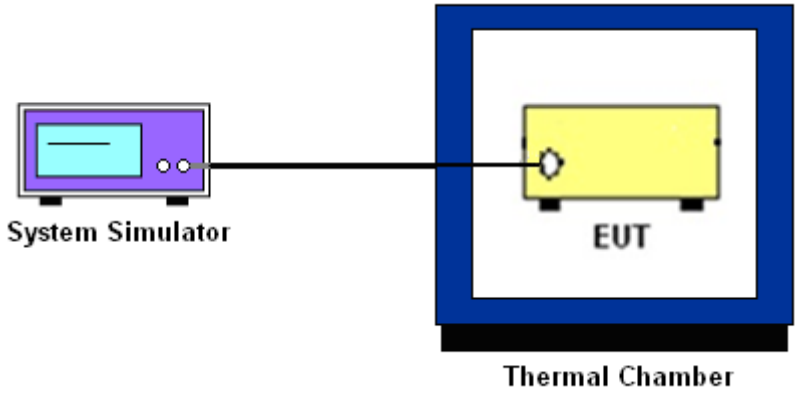

3.6.6 Test Result of Temperature Variation

Test Conditions	Middle Channel	CDMA BC10 (1xRTT)	Limit 2.5ppm
Temperature (°C)	Voltage (Volt)	Deviation (ppm)	Result
50	Normal Voltage	0.0077	PASS
40	Normal Voltage	0.0101	
30	Normal Voltage	0.0028	
20(Ref.)	Normal Voltage	0.0000	
10	Normal Voltage	0.0069	
0	Normal Voltage	0.0174	
-10	Normal Voltage	0.0126	
-20	Normal Voltage	0.0130	
-30	Normal Voltage	0.0016	
20	Maximum Voltage	0.0156	
20	Normal Voltage	0.0000	
20	Battery End Point	0.0211	

Note: Normal Voltage = 3.85V. ；Battery End Point (BEP) = 3.5 V.；Maximum Voltage =4.4 V

4 List of Measuring Equipment

Instrument	Manufacturer	Model No.	Serial No.	Characteristics	Calibration Date	Test Date	Due Date	Remark
Spectrum Analyzer	R&S	FSV40	101078	9kHz~40GHz	Apr. 20, 2017	Jun. 19, 2017~ Jun. 21, 2017	Apr. 19, 2018	Conducted (TH01-SZ)
Thermal Chamber	Ten Billion Hongzhangroup	LP-150U	H2014081803	-40~+150°C	Jul. 16, 2016	Jun. 19, 2017~ Jun. 21, 2017	Jul. 15, 2017	Conducted (TH01-SZ)
EXA Spectrum Anaiyzer	KEYSIGHT	N9010A	MY55150246	10Hz~44GHz;	Apr. 20, 2017	Jun. 28, 2017	Apr. 19, 2018	Radiation (03CH03-SZ)
Bilog Antenna	TeseQ	CBL6112D	35408	30MHz-2GHz	May 14, 2017	Jun. 28, 2017	May 13, 2018	Radiation (03CH03-SZ)
Horn Antenna	SCHWARZBECK	BBHA9120D	9120D-1285	1GHz~18GHz	Jan. 12, 2017	Jun. 28, 2017	Jan. 11, 2018	Radiation (03CH03-SZ
Amplifier	Burgeon	BPA-530	102210	0.01Hz ~3000MHz	Oct. 11, 2016	Jun. 28, 2017	Oct. 10, 2017	Radiation (03CH03-SZ)
Amplifier	Agilent Technologies	83017A	MY39501302	500MHz~26.5GHz	Jan. 06, 2017	Jun. 28, 2017	Jan. 05, 2018	Radiation (03CH03-SZ)
AC Power Source	Chroma	61601	616010001985	N/A	NCR	Jun. 28, 2017	NCR	Radiation (03CH03-SZ)
Turn Table	EM	EM1000	N/A	0~360 degree	NCR	Jun. 28, 2017	NCR	Radiation (03CH03-SZ)
Antenna Mast	EM	EM1000	N/A	1 m~4 m	NCR	Jun. 28, 2017	NCR	Radiation (03CH03-SZ)

NCR: No Calibration Required

5 Uncertainty of Evaluation

Uncertainty of Radiated Emission Measurement (30 MHz ~ 1000 MHz)

Measuring Uncertainty for a Level of Confidence of 95% (U = 2Uc(y))	3.0dB

Uncertainty of Radiated Emission Measurement (1 GHz ~ 18 GHz)

Measuring Uncertainty for a Level of Confidence of 95% (U = 2Uc(y))	3.6dB