FCC SAR Test Report

APPLICANT	:	CT Asia
EQUIPMENT	:	Tablet PC
BRAND NAME	:	BLU
MODEL NAME	:	Touch Book 7.0 Pro
FCC ID	:	YHLBLUTB70PRO
STANDARD	:	FCC 47 CFR Part 2 (2.1093) ANSI/IEEE C95.1-1992 IEEE 1528-2003

We, SPORTON INTERNATIONAL (SHENZHEN) INC., would like to declare that the tested sample has been evaluated in accordance with the procedures and shown the compliance with the applicable technical standards.

The test results in this report apply exclusively to the tested model / sample. Without written approval of SPORTON INTERNATIONAL (SHENZHEN) INC., the test report shall not be reproduced except in full.

Reviewed by: Eric Huang / Deputy Manager

Approved by: Jones Tsai / Manager

Testing Laboratory
2353

SPORTON INTERNATIONAL (SHENZHEN) INC.
No. 101, Complex Building C, Guanlong Village, Xili Town, Nanshan District, Shenzhen, Guangdong, P.R.C.

Table of Contents

1. Statement of Compliance **4**
2. Administration Data **5**
3. Guidance Standard **5**
4. Equipment Under Test (EUT) **6**
4.1 General Information 6
4.2 Maximum Tune-up Limit 6
5. RF Exposure Limits **7**
5.1 Uncontrolled Environment 7
5.2 Controlled Environment 7
6. Specific Absorption Rate (SAR) **8**
6.1 Introduction 8
6.2 SAR Definition 8
7. System Description and Setup **9**
8. Measurement Procedures **10**
8.1 Spatial Peak SAR Evaluation 10
8.2 Power Reference Measurement 11
8.3 Area Scan 11
8.4 Zoom Scan 12
8.5 Volume Scan Procedures 12
8.6 Power Drift Monitoring 12
9. Test Equipment List **13**
10. System Verification **14**
10.1 Tissue Verification 14
10.2 System Performance Check Results 15
11. RF Exposure Positions **16**
11.1 SAR Testing for Tablet 16
12. Conducted RF Output Power (Unit: dBm) **17**
13. Antenna Location **18**
14. SAR Test Results **20**
14.1 Body SAR 21
14.2 Repeated SAR Measurement 21
15. Simultaneous Transmission Analysis **21**
16. Uncertainty Assessment **22**
17. References **24**
Appendix A. Plots of System Performance Check
Appendix B. Plots of High SAR Measurement
Appendix C. DASY Calibration Certificate
Appendix D. Test Setup Photos

Revision History

REPORT NO.	VERSION	DESCRIPTION	ISSUED DATE
FA432015	Rev. 01	Initial issue of report	Apr. 24, 2014

1. Statement of Compliance

The maximum results of Specific Absorption Rate (SAR) found during testing for **CT Asia, Tablet PC, Touch Book 7.0 Pro,** are as follows.

Equipment Class	Frequency Band	Operating Mode	Highest SAR Summary Body 1g SAR (W/kg) (Separation 0cm)
DTS	WLAN 2.4GHz Band	Data	1.49
Date of Testing:		04/11/2014	

This device is in compliance with Specific Absorption Rate (SAR) for general population/uncontrolled exposure limits (1.6 W/kg) specified in FCC 47 CFR part 2 (2.1093) and ANSI/IEEE C95.1-1992, and had been tested in accordance with the measurement methods and procedures specified in IEEE 1528-2003.

2. Administration Data

Testing Laboratory	
Test Site	SPORTON INTERNATIONAL (SHENZHEN) INC.
Test Site Location	No. 101, Complex Building C, Guanlong Village, Xili Town, Nanshan District, Shenzhen, Guangdong, P.R.C. TEL: +86-755-8637-9589 FAX: +86-755-8637-9595

Applicant	
Company Name	CT Asia
Address	Unit 01, 15/F, Seaview Centre, 139-141 Hoi bun road, Kwun Tong, Kowloon, Hongkong

Manufacturer	
Company Name	SHENZHEN YIFANG DIGITAL TECHNOLOGY CO., LTD.
Address	Building NO.22,23, Fifth Region, Baiwangxin Industrial Park, Songbai Rd., Nanshan, Shenzhen 518108, China

3. Guidance Standard

The Specific Absorption Rate (SAR) testing specification, method, and procedure for this device is in accordance with the following standards:

- FCC 47 CFR Part 2 (2.1093)
- ANSI/IEEE C95.1-1992
- IEEE 1528-2003
- FCC KDB 865664 D01 SAR Measurement 100 MHz to 6 GHz v01r03
- FCC KDB 865664 D02 SAR Reporting v01r01
- FCC KDB 447498 D01 General RF Exposure Guidance v05r02
- FCC KDB 248227 D01 SAR meas for 802 11abg v01r02
- FCC KDB 616217 D04 SAR for laptop and tablets v01r01

4. Equipment Under Test (EUT)

4.1 General Information

Product Feature & Specification	
Equipment Name	Tablet PC
Brand Name	BLU
Model Name	Touch Book 7.0 Pro
FCC ID	YHLBLUTB70PRO
Wireless Technology and Frequency Range	WLAN 2.4GHz Band: 2412 MHz ~ 2462 MHz
Mode	• 802.11b/g/n HT20/HT40
HW Version	V1.4D
SW Version	BLUM7103KLP_20140304_V2.0.0_4.2.2
EUT Stage	Identical Prototype

Remark:
1. The above EUT's information was declared by manufacturer. Please refer to the specifications or user's manual for more detailed description.
2. Voice call is not supported.

4.2 Maximum Tune-up Limit

Mode		Maximum Average Power (dBm)
2.4GHz	802.11b	13.5
	802.11g	13.5
	802.11n-HT20	12.5
	802.11n-HT40	11.5

5. RF Exposure Limits

5.1 Uncontrolled Environment

Uncontrolled Environments are defined as locations where there is the exposure of individuals who have no knowledge or control of their exposure. The general population/uncontrolled exposure limits are applicable to situations in which the general public may be exposed or in which persons who are exposed as a consequence of their employment may not be made fully aware of the potential for exposure or cannot exercise control over their exposure. Members of the general public would come under this category when exposure is not employment-related; for example, in the case of a wireless transmitter that exposes persons in its vicinity.

5.2 Controlled Environment

Controlled Environments are defined as locations where there is exposure that may be incurred by persons who are aware of the potential for exposure, (i.e. as a result of employment or occupation). In general, occupational/controlled exposure limits are applicable to situations in which persons are exposed as a consequence of their employment, who have been made fully aware of the potential for exposure and can exercise control over their exposure. The exposure category is also applicable when the exposure is of a transient nature due to incidental passage through a location where the exposure levels may be higher than the general population/uncontrolled limits, but the exposed person is fully aware of the potential for exposure and can exercise control over his or her exposure by leaving the area or by some other appropriate means.

Limits for Occupational/Controlled Exposure (W/kg)

Whole-Body	Partial-Body	Hands, Wrists, Feet and Ankles
0.4	8.0	20.0

Limits for General Population/Uncontrolled Exposure (W/kg)

Whole-Body	Partial-Body	Hands, Wrists, Feet and Ankles
0.08	1.6	4.0

1. Whole-Body SAR is averaged over the entire body, partial-body SAR is averaged over any 1gram of tissue defined as a tissue volume in the shape of a cube. SAR for hands, wrists, feet and ankles is averaged over any 10 grams of tissue defined as a tissue volume in the shape of a cube.

6. Specific Absorption Rate (SAR)

6.1 Introduction

SAR is related to the rate at which energy is absorbed per unit mass in an object exposed to a radio field. The SAR distribution in a biological body is complicated and is usually carried out by experimental techniques or numerical modeling. The standard recommends limits for two tiers of groups, occupational/controlled and general population/uncontrolled, based on a person's awareness and ability to exercise control over his or her exposure. In general, occupational/controlled exposure limits are higher than the limits for general population/uncontrolled.

6.2 SAR Definition

The SAR definition is the time derivative (rate) of the incremental energy (dW) absorbed by (dissipated in) an incremental mass (dm) contained in a volume element (dv) of a given density (ρ). The equation description is as below:

$$\mathbf{SAR} = \frac{\mathbf{d}}{\mathbf{dt}}\left(\frac{\mathbf{dW}}{\mathbf{dm}}\right) = \frac{\mathbf{d}}{\mathbf{dt}}\left(\frac{\mathbf{dW}}{\boldsymbol{\rho}\mathbf{dv}}\right)$$

SAR is expressed in units of Watts per kilogram (W/kg)

$$\mathbf{SAR} = \frac{\boldsymbol{\sigma}|\mathbf{E}|^2}{\boldsymbol{\rho}}$$

Where: σ is the conductivity of the tissue, ρ is the mass density of the tissue and E is the RMS electrical field strength.

7. System Description and Setup

The DASY system used for performing compliance tests consists of the following items:

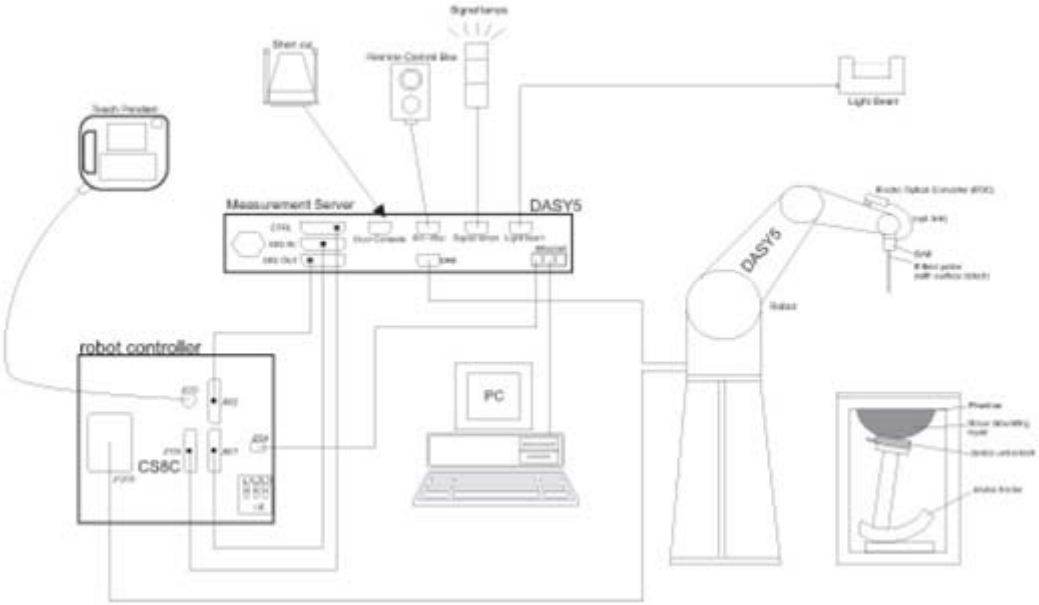

- A standard high precision 6-axis robot with controller, teach pendant and software. An arm extension for accommodating the data acquisition electronics (DAE).
- An isotropic Field probe optimized and calibrated for the targeted measurement.
- A data acquisition electronics (DAE) which performs the signal amplification, signal multiplexing, AD-conversion, offset measurements, mechanical surface detection, collision detection, etc. The unit is battery powered with standard or rechargeable batteries. The signal is optically transmitted to the EOC.
- The Electro-optical converter (EOC) performs the conversion from optical to electrical signals for the digital communication to the DAE. To use optical surface detection, a special version of the EOC is required. The EOC signal is transmitted to the measurement server.
- The function of the measurement server is to perform the time critical tasks such as signal filtering, control of the robot operation and fast movement interrupts.
- The Light Beam used is for probe alignment. This improves the (absolute) accuracy of the probe positioning.
- A computer running WinXP or Win7 and the DASY5 software.
- Remote control and teach pendant as well as additional circuitry for robot safety such as warning lamps, etc.
- The phantom, the device holder and other accessories according to the targeted measurement.

8. Measurement Procedures

The measurement procedures are as follows:

<Conducted power measurement>

(a) For WLAN power measurement, use engineering software to configure EUT WLAN continuously transmission, at maximum RF power in each supported wireless interface and frequency band
(b) Connect EUT RF port through RF cable to the power meter, and measure WLAN output power

<SAR measurement>

(a) Use engineering software to configure EUT WLAN continuously transmission, at maximum RF power, in the highest power channel.
(b) Place the EUT in the positions as Appendix D demonstrates.
(c) Set scan area, grid size and other setting on the DASY software.
(d) Measure SAR results for the highest power channel on each testing position.
(e) Find out the largest SAR result on these testing positions of each band
(f) Measure SAR results for other channels in worst SAR testing position if the reported SAR of highest power channel is larger than 0.8 W/kg

According to the test standard, the recommended procedure for assessing the peak spatial-average SAR value consists of the following steps:

(a) Power reference measurement
(b) Area scan
(c) Zoom scan
(d) Power drift measurement

8.1 Spatial Peak SAR Evaluation

The procedure for spatial peak SAR evaluation has been implemented according to the test standard. It can be conducted for 1g and 10g, as well as for user-specific masses. The DASY software includes all numerical procedures necessary to evaluate the spatial peak SAR value.

The base for the evaluation is a "cube" measurement. The measured volume must include the 1g and 10g cubes with the highest averaged SAR values. For that purpose, the center of the measured volume is aligned to the interpolated peak SAR value of a previously performed area scan.

The entire evaluation of the spatial peak values is performed within the post-processing engine (SEMCAD). The system always gives the maximum values for the 1g and 10g cubes. The algorithm to find the cube with highest averaged SAR is divided into the following stages:

(a) Extraction of the measured data (grid and values) from the Zoom Scan
(b) Calculation of the SAR value at every measurement point based on all stored data (A/D values and measurement parameters)
(c) Generation of a high-resolution mesh within the measured volume
(d) Interpolation of all measured values form the measurement grid to the high-resolution grid
(e) Extrapolation of the entire 3-D field distribution to the phantom surface over the distance from sensor to surface
(f) Calculation of the averaged SAR within masses of 1g and 10g

8.2 Power Reference Measurement

The Power Reference Measurement and Power Drift Measurements are for monitoring the power drift of the device under test in the batch process. The minimum distance of probe sensors to surface determines the closest measurement point to phantom surface. This distance cannot be smaller than the distance of sensor calibration points to probe tip as defined in the probe properties.

8.3 Area Scan

The area scan is used as a fast scan in two dimensions to find the area of high field values, before doing a fine measurement around the hot spot. The sophisticated interpolation routines implemented in DASY software can find the maximum found in the scanned area, within a range of the global maximum. The range (in dB0 is specified in the standards for compliance testing. For example, a 2 dB range is required in IEEE standard 1528 and IEC 62209 standards, whereby 3 dB is a requirement when compliance is assessed in accordance with the ARIB standard (Japan), if only one zoom scan follows the area scan, then only the absolute maximum will be taken as reference. For cases where multiple maximums are detected, the number of zoom scans has to be increased accordingly.

Area scan parameters extracted from FCC KDB 865664 D01v01r03 SAR measurement 100 MHz to 6 GHz.

	≤ 3 GHz	> 3 GHz
Maximum distance from closest measurement point (geometric center of probe sensors) to phantom surface	5 ± 1 mm	½·δ·ln(2) ± 0.5 mm
Maximum probe angle from probe axis to phantom surface normal at the measurement location	30° ± 1°	20° ± 1°
Maximum area scan spatial resolution: Δx_{Area}, Δy_{Area}	≤ 2 GHz: ≤ 15 mm 2 – 3 GHz: ≤ 12 mm	3 – 4 GHz: ≤ 12 mm 4 – 6 GHz: ≤ 10 mm
	When the x or y dimension of the test device, in the measurement plane orientation, is smaller than the above, the measurement resolution must be ≤ the corresponding x or y dimension of the test device with at least one measurement point on the test device.	

8.4 Zoom Scan

Zoom scans are used assess the peak spatial SAR values within a cubic averaging volume containing 1 gram and 10 gram of simulated tissue. The zoom scan measures points (refer to table below) within a cube shoes base faces are centered on the maxima found in a preceding area scan job within the same procedure. When the measurement is done, the zoom scan evaluates the averaged SAR for 1 gram and 10 gram and displays these values next to the job's label.

Zoom scan parameters extracted from FCC KDB 865664 D01v01r03 SAR measurement 100 MHz to 6 GHz.

			≤ 3 GHz	> 3 GHz
Maximum zoom scan spatial resolution: Δx_{Zoom}, Δy_{Zoom}			≤ 2 GHz: ≤ 8 mm 2 – 3 GHz: ≤ 5 mm*	3 – 4 GHz: ≤ 5 mm* 4 – 6 GHz: ≤ 4 mm*
Maximum zoom scan spatial resolution, normal to phantom surface	uniform grid: $\Delta z_{Zoom}(n)$		≤ 5 mm	3 – 4 GHz: ≤ 4 mm 4 – 5 GHz: ≤ 3 mm 5 – 6 GHz: ≤ 2 mm
	graded grid	$\Delta z_{Zoom}(1)$: between 1st two points closest to phantom surface	≤ 4 mm	3 – 4 GHz: ≤ 3 mm 4 – 5 GHz: ≤ 2.5 mm 5 – 6 GHz: ≤ 2 mm
		$\Delta z_{Zoom}(n>1)$: between subsequent points	$\leq 1.5 \cdot \Delta z_{Zoom}(n-1)$	
Minimum zoom scan volume	x, y, z		≥ 30 mm	3 – 4 GHz: ≥ 28 mm 4 – 5 GHz: ≥ 25 mm 5 – 6 GHz: ≥ 22 mm

Note: δ is the penetration depth of a plane-wave at normal incidence to the tissue medium; see draft standard IEEE P1528-2011 for details.

* When zoom scan is required and the *reported* SAR from the *area scan based 1-g SAR estimation* procedures of KDB 447498 is ≤ 1.4 W/kg, ≤ 8 mm, ≤ 7 mm and ≤ 5 mm zoom scan resolution may be applied, respectively, for 2 GHz to 3 GHz, 3 GHz to 4 GHz and 4 GHz to 6 GHz.

8.5 Volume Scan Procedures

The volume scan is used for assess overlapping SAR distributions for antennas transmitting in different frequency bands. It is equivalent to an oversized zoom scan used in standalone measurements. The measurement volume will be used to enclose all the simultaneous transmitting antennas. For antennas transmitting simultaneously in different frequency bands, the volume scan is measured separately in each frequency band. In order to sum correctly to compute the 1g aggregate SAR, the EUT remain in the same test position for all measurements and all volume scan use the same spatial resolution and grid spacing. When all volume scan were completed, the software, SEMCAD postprocessor can combine and subsequently superpose these measurement data to calculating the multiband SAR.

8.6 Power Drift Monitoring

All SAR testing is under the EUT install full charged battery and transmit maximum output power. In DASY measurement software, the power reference measurement and power drift measurement procedures are used for monitoring the power drift of EUT during SAR test. Both these procedures measure the field at a specified reference position before and after the SAR testing. The software will calculate the field difference in dB. If the power drifts more than 5%, the SAR will be retested.

9. Test Equipment List

Manufacturer	Name of Equipment	Type/Model	Serial Number	Calibration	
				Last Cal.	Due Date
SPEAG	2450MHz System Validation Kit	D2450V2	908	Mar. 26. 2013	Mar. 24. 2015
SPEAG	Data Acquisition Electronics	DAE4	910	Dec. 17, 2013	Dec. 16, 2014
SPEAG	Dosimetric E-Field Probe	EX3DV4	3819	Nov. 27, 2013	Nov. 26, 2014
SPEAG	ELI4 Phantom	QD OVA 002 AA	1149	NCR	NCR
SPEAG	Phone Positioner	N/A	N/A	NCR	NCR
Agilent	Wireless Communication Test Set	E5515C	MY50267224	Oct. 10, 2013	Oct. 09, 2014
R&S	Network Analyzer	ZVB8	100106	Nov. 07, 2013	Nov. 06, 2014
SPEAG	Dielectric Assessment KIT	DAK-3.5	1032	NCR	NCR
Anritsu	Power Meter	ML2495A	1218010	Mar. 03. 2014	Mar. 02. 2015
Anritsu	Power Sensor	MA2411B	1207253	Mar. 03. 2014	Mar. 02. 2015
R&S	Spectrum Analyzer	FSP7	101230	Jun. 13, 2013	Jun. 12, 2014
Agilent	Dual Directional Coupler	778D	50422	*CBT	
Woken	Attenuator	WK0602-XX	N/A	*CBT	
PE	Attenuator	PE7005-10	N/A	*CBT	
PE	Attenuator	PE7005- 3	N/A	*CBT	
AR	Power Amplifier	5S1G4M2	0328767	*CBT	
Mini-Circuits	Power Amplifier	ZVE-3W	162601250	*CBT	
Mini-Circuits	Power Amplifier	ZHL-42W+	13440021344	*CBT	

General Note:

1. The calibration certificate of DASY can be referred to appendix C of this report.
2. Referring to KDB 865664 D01v01r03, the dipole calibration interval can be extended to 3 years with justification. The dipoles are also not physically damaged, or repaired during the interval.
3. The justification data of dipole D2450V2, SN: 908 can be found in appendix C. The return loss is < -20dB, within 20% of prior calibration, the impedance is within 5 ohm of prior calibration.
4. *CBT (Calibrated Before Testing). Prior to testing, the measurement paths containing an amplifier, coupler and attenuator were connected to a calibrated source (i.e. a signal generator) to determine the losses of the measurement path. The power meter offset was then adjusted to compensate for the measurement system losses. This level offset is stored within the power meter before measurements are made. The calibrated reading is then taken directly from the power meter after compensation of the losses for all final power measurement.

10. System Verification

10.1 Tissue Verification

The following tissue formulations are provided for reference only as some of the parameters have not been thoroughly verified. The composition of ingredients may be modified accordingly to achieve the desired target tissue parameters required for routine SAR evaluation.

Frequency (MHz)	Water (%)	Sugar (%)	Cellulose (%)	Salt (%)	Preventol (%)	DGBE (%)	Conductivity (σ)	Permittivity (εr)
For Body								
2450	68.6	0	0	0	0	31.4	1.95	52.7

<Tissue Dielectric Parameter Check Results>

Frequency (MHz)	Tissue Type	Liquid Temp. (℃)	Conductivity (σ)	Permittivity (ε_r)	Conductivity Target (σ)	Permittivity Target (ε_r)	Delta (σ) (%)	Delta (ε_r) (%)	Limit (%)	Date
2450	Body	22.7	2.013	51.474	1.95	52.70	3.23	-2.33	±5	2014/4/11

10.2 System Performance Check Results

Comparing to the original SAR value provided by SPEAG, the verification data should be within its specification of 10 %. Below table shows the target SAR and measured SAR after normalized to 1W input power. The table below indicates the system performance check can meet the variation criterion and the plots can be referred to Appendix A of this report.

Date	Frequency (MHz)	Tissue Type	Input Power (mW)	Dipole S/N	Probe S/N	DAE S/N	Measured SAR (W/kg)	Targeted SAR (W/kg)	Normalized SAR (W/kg)	Deviation (%)
2014/4/11	2450	Body	250	908	3819	910	13.40	50.40	53.6	6.35

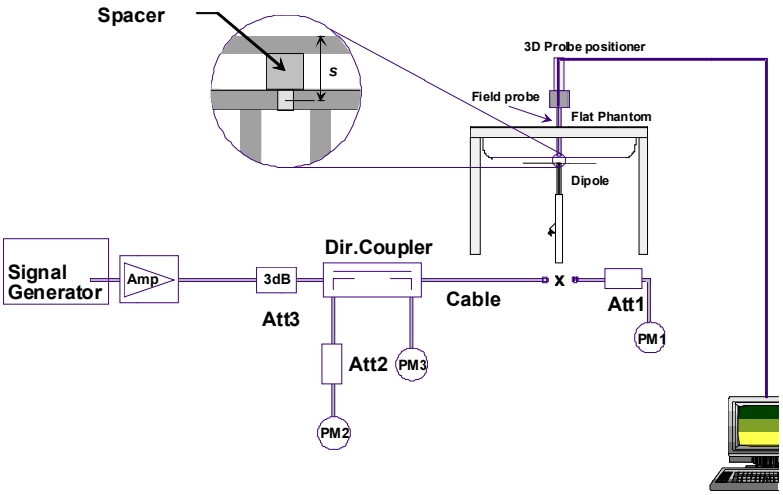

Fig 8.3.1 System Performance Check Setup

Fig 8.3.2 Setup Photo

11. RF Exposure Positions

This EUT was tested in four different positions. They are bottom-face of tablet PC, Edge1, Edge2 and Curved surface of Edge1. In these positions, the surface of EUT is touching with phantom 0 cm, Please refer to Appendix D for the test setup photos.

11.1 SAR Testing for Tablet

This device can be used also in full sized tablet exposure conditions, due to its size. Per FCC KDB 616217, the back surface and edges of the tablet should be tested for SAR compliance with the tablet touching the phantom. The SAR exclusion threshold in KDB 447498 D01v05r02 can be applied to determine SAR test exclusion for adjacent edge configurations. The closest distance from the antenna to an adjacent tablet edge is used to determine if SAR testing is required for the adjacent edges, with the adjacent edge positioned against the phantom and the edge containing the antenna positioned perpendicular to the phantom.

12. Conducted RF Output Power (Unit: dBm)

<WLAN Conducted Power>

General Note:

1. Per KDB 248227 D01 v01r02, choose the highest output power channel to test SAR and determine further SAR exclusion
2. For each frequency band, testing at higher data rates and higher order modulations is not required when the maximum average output power for each of these configurations is less than 1/4dB higher than those measured at the lowest data rate
3. Apply the test exclusion rule in KDB 248227 D01 v01r02 11g, 11n-HT20 and 11n-HT40 output power is less than 1/4dB higher than 11b mode, thus the SAR can be excluded.

<2.4GHz WLAN>

802.11b Average Power (dBm)					
Channel	Frequency (MHz)	Data Rate (bps)			
		1M bps	2M bps	5.5M bps	11M bps
CH 01	2412	12.75	12.7	12.68	12.63
CH 06	2437	**13.25**	13.22	13.17	13.14
CH 11	2462	12.91	12.84	12.81	12.87

802.11g Average Power (dBm)									
Channel	Frequency (MHz)	Data Rate (bps)							
		6M bps	9M bps	12M bps	18M bps	24M bps	36M bps	48M bps	54M bps
CH 01	2412	12.17	12.14	12.12	12.15	12.07	12.03	12.01	11.98
CH 06	2437	12.32	12.28	12.25	12.22	12.26	12.18	12.15	12.18
CH 11	2462	**13.02**	12.96	12.99	12.97	12.93	12.9	12.94	12.86

WLAN 2.4GHz Band 802.11n-HT20 Average Power (dBm)									
Channel	Frequency (MHz)	MCS Index							
		MCS0	MCS1	MCS2	MCS3	MCS4	MCS5	MCS6	MCS7
CH 01	2412	11.24	11.18	11.2	11.15	11.08	11.11	11.15	11.07
CH 06	2437	11.36	11.32	11.33	11.3	11.28	11.22	11.28	11.24
CH 11	2462	**12.16**	12.11	12.08	12.05	12.08	12.03	12.09	12.02

WLAN 2.4GHz Band 802.11n-HT40 Average Power (dBm)									
Channel	Frequency (MHz)	MCS Index							
		MCS0	MCS1	MCS2	MCS3	MCS4	MCS5	MCS6	MCS7
CH 03	2422	10.94	10.91	10.88	10.82	10.87	10.81	10.77	10.75
CH 06	2437	10.88	10.82	10.86	10.81	10.83	10.85	10.78	10.74
CH 09	2452	**11.29**	11.23	11.25	11.21	11.17	11.12	11.14	11.11

13. Antenna Location

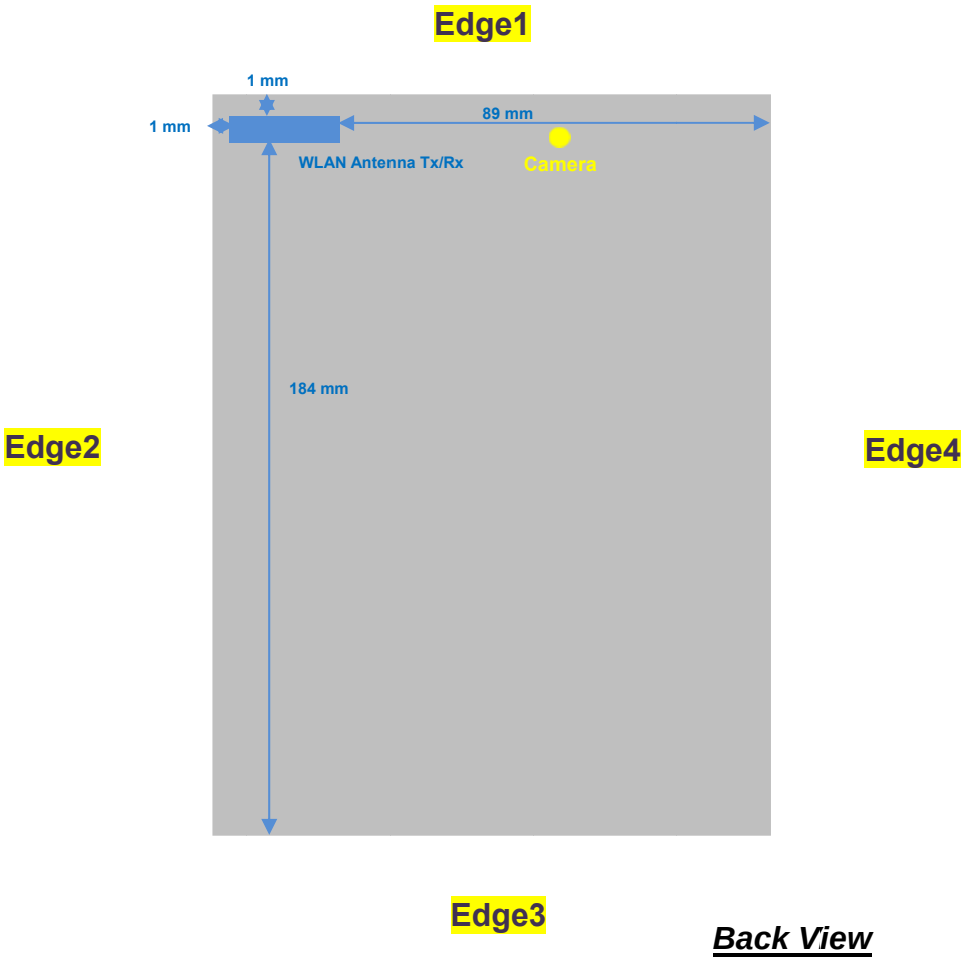

Back View

General Note:

1. Above the table, when the distance is < 50 mm exclusion threshold is "Ratio", when the distance is > 50 mm exclusion threshold is "mW"
2. Maximum power is the source-based time-average power and represents the maximum RF output power among production units
3. Per KDB 447498 D01v05r02, for larger devices, the test separation distance of adjacent edge configuration is determined by the closest separation between the antenna and the user.
4. Per KDB 447498 D01v05r02, standalone SAR test exclusion threshold is applied; If the test separation distance is < 5mm, 5mm is used to determine SAR exclusion threshold.
5. Per KDB 447498 D01v05r02, the 1-g and 10-g SAR test exclusion thresholds for 100 MHz to 6 GHz at *test separation distances* ≤ 50 mm are determined by:
   [(*max. power of channel, including tune-up tolerance, mW*)/(*min. test separation distance, mm*)] ·[$\sqrt{f(GHz)}$] ≤ 3.0 for 1-g SAR and ≤ 7.5 for 10-g extremity SAR
   - f(GHz) is the RF channel transmit frequency in GHz
   - Power and distance are rounded to the nearest mW and mm before calculation
   - The result is rounded to one decimal place for comparison
   - For < 50 mm distance, we just calculate mW of the exclusion threshold value (3.0) to do compare. This formula is [3.0] / [$\sqrt{f(GHz)}$] ·[(*min. test separation distance, mm*)] = exclusion threshold of mW.
6. Per KDB 447498 D01v05r02, at 100 MHz to 6 GHz and for *test separation distances* > 50 mm, the SAR test exclusion threshold is determined according to the following
   a) [Threshold at 50 mm in step 1) + (test separation distance - 50 mm)·(f(MHz)/150)] mW, at 100 MHz to 1500 MHz
   b) [Threshold at 50 mm in step 1) + (test separation distance - 50 mm)·10] mW at > 1500 MHz and ≤ 6 GHz

SAR test exclusion table distance is ≤ 50mm

Exposure Position	Wireless Interface	802.11b
	Tune-up Maximum power (dBm)	13.5
Bottom Face	Antenna to user (mm)	0
	SAR exclusion threshold	7
	SAR testing required?	**Yes**
Edge 1	Antenna to user (mm)	1
	SAR exclusion threshold	7
	SAR testing required?	**Yes**
Edge 2	Antenna to user (mm)	1
	SAR exclusion threshold	7
	SAR testing required?	**Yes**

SAR test exclusion table distance is > 50mm

Exposure Position	Wireless Interface	802.11b
	Tune-up Maximum power (dBm)	13.5
	Tune-up Maximum rated power (mW)	22
Edge 3	Antenna to user (mm)	184
	SAR exclusion threshold (mW)	1436
	SAR testing required?	**No**
Edge 4	Antenna to user (mm)	89
	SAR exclusion threshold (mW)	486
	SAR testing required?	**No**

14. SAR Test Results

General Note:

1. Per KDB 447498 D01v05r02, the reported SAR is the measured SAR value adjusted for maximum tune-up tolerance.
   a. Tune-up scaling Factor = tune-up limit power (mW) / EUT RF power (mW), where tune-up limit is the maximum rated power among all production units.
   b. Reported SAR(W/kg)= Measured SAR(W/kg)*Tune-up Scaling Factor
2. Per KDB 447498 D01v05r02, for each exposure position, testing of other required channels within the operating mode of a frequency band is not required when the *reported* 1-g or 10-g SAR for the mid-band or highest output power channel is:
   - ≤ 0.8 W/kg or 2.0 W/kg, for 1-g or 10-g respectively, when the transmission band is ≤ 100 MHz
   - ≤ 0.6 W/kg or 1.5 W/kg, for 1-g or 10-g respectively, when the transmission band is between 100 MHz and 200 MHz
   - ≤ 0.4 W/kg or 1.0 W/kg, for 1-g or 10-g respectively, when the transmission band is ≥ 200 MHz
3. Considering the curvature transition from bottom face to the edge, SAR testing at the curvature was performed.
4. For SAR testing of the curved region of the device, the device was placed directly against the phantom at the point where the distance between the antenna and device exterior is a minimum.
5. Per KDB 616217 D04v01r01, the additional separation introduced by the contour against a flat phantom is smaller than 5mm, only wireless interfaces which SAR level at standard edge position >1.2w/kg, are chosen to test SAR at the curved surface, more detail information please refer to the setup photo.

14.1 Body SAR

<DTS WLAN SAR>

Plot No.	Band	Mode	Test Position	Gap (cm)	Ch.	Freq. (MHz)	Average Power (dBm)	Tune-Up Limit (dBm)	Scaling Factor	Power Drift (dB)	Measured 1g SAR (W/kg)	Reported 1g SAR (W/kg)
	WLAN2.4GHz	802.11b, 1Mbps	Bottom Face	0	6	2437	13.25	13.5	1.059	0.05	1.110	1.176
	WLAN2.4GHz	802.11b, 1Mbps	Edge1	0	6	2437	13.25	13.5	1.059	0.09	1.290	1.366
	WLAN2.4GHz	802.11b, 1Mbps	Edge2	0	6	2437	13.25	13.5	1.059	0.06	0.174	0.184
	WLAN2.4GHz	802.11b, 1Mbps	Bottom Face	0	1	2412	12.75	13.5	1.189	0.02	0.889	1.057
	WLAN2.4GHz	802.11b, 1Mbps	Bottom Face	0	11	2462	12.91	13.5	1.146	0.01	0.975	1.117
01	**WLAN2.4GHz**	**802.11b, 1Mbps**	**Edge1**	**0**	**1**	**2412**	**12.75**	**13.5**	**1.189**	**-0.03**	**1.250**	**1.486**
	WLAN2.4GHz	802.11b, 1Mbps	Edge1	0	11	2462	12.91	13.5	1.146	0.08	1.270	1.455
	WLAN2.4GHz	802.11b, 1Mbps	Curved surface of Edge1	0	6	2437	13.25	13.5	1.059	-0.07	0.973	1.031
	WLAN2.4GHz	802.11b, 1Mbps	Curved surface of Edge1	0	1	2412	12.75	13.5	1.189	0.04	0.942	1.120
	WLAN2.4GHz	802.11b, 1Mbps	Curved surface of Edge1	0	11	2462	12.91	13.5	1.146	0.04	0.761	0.872

14.2 Repeated SAR Measurement

Plot No.	Band	Mode	Test Position	Gap (cm)	Ch.	Freq. (MHz)	Average Power (dBm)	Tune-Up Limit (dBm)	Scaling Factor	Power Drift (dB)	Measured 1g SAR (W/kg)	Ratio	Reported 1g SAR (W/kg)
1st	WLAN2.4GHz	802.11b, 1Mbps	Edge1	0	6	2437	13.25	13.5	1.059	0.09	1.290	1	1.366
2nd	WLAN2.4GHz	802.11b, 1Mbps	Edge1	0	6	2437	13.25	13.5	1.059	0.08	1.200	1.070	1.271

General Note:

1. Per KDB 865664 D01v01r03, for each frequency band, repeated SAR measurement is required only when the measured SAR is ≥0.8W/kg
2. Per KDB 865664 D01v01r03, if the ratio among the repeated measurement is ≤ 1.2 and the measured SAR <1.45W/kg, only one repeated measurement is required.
3. The ratio is the difference in percentage between original and repeated *measured SAR*.
4. All measurement SAR result is scaled-up to account for tune-up tolerance and is compliant.

15. Simultaneous Transmission Analysis

NO.	Simultaneous Transmission Configurations
1.	None

Note: This device has only one transmission unit and does not support Co-located.

Test Engineer： Luke Lu

16. Uncertainty Assessment

The component of uncertainly may generally be categorized according to the methods used to evaluate them. The evaluation of uncertainly by the statistical analysis of a series of observations is termed a Type An evaluation of uncertainty. The evaluation of uncertainty by means other than the statistical analysis of a series of observation is termed a Type B evaluation of uncertainty. Each component of uncertainty, however evaluated, is represented by an estimated standard deviation, termed standard uncertainty, which is determined by the positive square root of the estimated variance.

A Type A evaluation of standard uncertainty may be based on any valid statistical method for treating data. This includes calculating the standard deviation of the mean of a series of independent observations; using the method of least squares to fit a curve to the data in order to estimate the parameter of the curve and their standard deviations; or carrying out an analysis of variance in order to identify and quantify random effects in certain kinds of measurement.

A type B evaluation of standard uncertainty is typically based on scientific judgment using all of the relevant information available. These may include previous measurement data, experience, and knowledge of the behavior and properties of relevant materials and instruments, manufacture's specification, data provided in calibration reports and uncertainties assigned to reference data taken from handbooks. Broadly speaking, the uncertainty is either obtained from an outdoor source or obtained from an assumed distribution, such as the normal distribution, rectangular or triangular distributions indicated in table below.

Uncertainty Distributions	Normal	Rectangular	Triangular	U-Shape
Multi-plying Factor[(a)]	1/k[(b)]	1/√3	1/√6	1/√2

(a) standard uncertainty is determined as the product of the multiplying factor and the estimated range of variations in the measured quantity

(b) κ is the coverage factor

Table 14.1. Standard Uncertainty for Assumed Distribution

The combined standard uncertainty of the measurement result represents the estimated standard deviation of the result. It is obtained by combining the individual standard uncertainties of both Type A and Type B evaluation using the usual "root-sum-squares" (RSS) methods of combining standard deviations by taking the positive square root of the estimated variances.

Expanded uncertainty is a measure of uncertainty that defines an interval about the measurement result within which the measured value is confidently believed to lie. It is obtained by multiplying the combined standard uncertainty by a coverage factor. Typically, the coverage factor ranges from 2 to 3. Using a coverage factor allows the true value of a measured quantity to be specified with a defined probability within the specified uncertainty range. For purpose of this document, a coverage factor two is used, which corresponds to confidence interval of about 95 %. The DASY uncertainty Budget is shown in the following tables.

Error Description	Uncertainty Value (±%)	Probability Distribution	Divisor	Ci (1g)	Ci (10g)	Standard Uncertainty (1g)	Standard Uncertainty (10g)
Measurement System							
Probe Calibration	6.0	Normal	1	1	1	± 6.0 %	± 6.0 %
Axial Isotropy	4.7	Rectangular	√3	0.7	0.7	± 1.9 %	± 1.9 %
Hemispherical Isotropy	9.6	Rectangular	√3	0.7	0.7	± 3.9 %	± 3.9 %
Boundary Effects	1.0	Rectangular	√3	1	1	± 0.6 %	± 0.6 %
Linearity	4.7	Rectangular	√3	1	1	± 2.7 %	± 2.7 %
System Detection Limits	1.0	Rectangular	√3	1	1	± 0.6 %	± 0.6 %
Readout Electronics	0.3	Normal	1	1	1	± 0.3 %	± 0.3 %
Response Time	0.8	Rectangular	√3	1	1	± 0.5 %	± 0.5 %
Integration Time	2.6	Rectangular	√3	1	1	± 1.5 %	± 1.5 %
RF Ambient Noise	3.0	Rectangular	√3	1	1	± 1.7 %	± 1.7 %
RF Ambient Reflections	3.0	Rectangular	√3	1	1	± 1.7 %	± 1.7 %
Probe Positioner	0.4	Rectangular	√3	1	1	± 0.2 %	± 0.2 %
Probe Positioning	2.9	Rectangular	√3	1	1	± 1.7 %	± 1.7 %
Max. SAR Eval.	1.0	Rectangular	√3	1	1	± 0.6 %	± 0.6 %
Test Sample Related							
Device Positioning	2.9	Normal	1	1	1	± 2.9 %	± 2.9 %
Device Holder	3.6	Normal	1	1	1	± 3.6 %	± 3.6 %
Power Drift	5.0	Rectangular	√3	1	1	± 2.9 %	± 2.9 %
Phantom and Setup							
Phantom Uncertainty	4.0	Rectangular	√3	1	1	± 2.3 %	± 2.3 %
Liquid Conductivity (Target)	5.0	Rectangular	√3	0.64	0.43	± 1.8 %	± 1.2 %
Liquid Conductivity (Meas.)	2.5	Normal	1	0.64	0.43	± 1.6 %	± 1.1 %
Liquid Permittivity (Target)	5.0	Rectangular	√3	0.6	0.49	± 1.7 %	± 1.4 %
Liquid Permittivity (Meas.)	2.5	Normal	1	0.6	0.49	± 1.5 %	± 1.2 %
Combined Standard Uncertainty						± 11.0 %	± 10.8 %
Coverage Factor for 95 %						K=2	
Expanded Uncertainty						**± 22.0 %**	**± 21.5 %**

Table 14.2. Uncertainty Budget for frequency range 300 MHz to 3 GHz

17. References

[1] FCC 47 CFR Part 2 “Frequency Allocations and Radio Treaty Matters; General Rules and Regulations”

[2] ANSI/IEEE Std. C95.1-1992, “IEEE Standard for Safety Levels with Respect to Human Exposure to Radio Frequency Electromagnetic Fields, 3 kHz to 300 GHz”, September 1992

[3] IEEE Std. 1528-2003, “Recommended Practice for Determining the Peak Spatial-Average Specific Absorption Rate (SAR) in the Human Head from Wireless Communications Devices: Measurement Techniques”, December 2003

[4] SPEAG DASY System Handbook

[5] FCC KDB 248227 D01 v01r02, “SAR Measurement Procedures for 802.11 a/b/g Transmitters”, May 2007

[6] FCC KDB 447498 D01 v05r02, “Mobile and Portable Device RF Exposure Procedures and Equipment Authorization Policies”, Feb 2014

[7] FCC KDB 616217 D04 v01r01, “SAR Evaluation Considerations for Laptop, Notebook, Netbook and Tablet Computers”, May 2013

[8] FCC KDB 865664 D01 v01r03, "SAR Measurement Requirements for 100 MHz to 6 GHz", Feb 2014.

[9] FCC KDB 865664 D02 v01r01, “RF Exposure Compliance Reporting and Documentation Considerations” May 2013.

Appendix A. Plots of System Performance Check

The plots are shown as follows.

Test Laboratory: Sporton International Inc. SAR/HAC Testing Lab Date: 2014.04.11

System Check_Body_2450MHz_140411

DUT: D2450V2 - SN:908

Communication System: UID 0, CW; Frequency: 2450 MHz;Duty Cycle: 1:1
Medium: MSL_2450_140411 Medium parameters used: f = 2450 MHz; σ = 2.013 S/m; ε_r = 51.474; ρ = 1000 kg/m^3
Ambient Temperature：23.3 ℃; Liquid Temperature：22.7 ℃

DASY5 Configuration:
- Probe: EX3DV4 - SN3819; ConvF(7.07, 7.07, 7.07); Calibrated: 2013.11.27;
- Sensor-Surface: 2mm (Mechanical Surface Detection)
- Electronics: DAE4 Sn910; Calibrated: 2013.12.17
- Phantom: SAM3; Type: QDOVA002AA; Serial: TP:1149
- Measurement SW: DASY52, Version 52.8 (7); SEMCAD X Version 14.6.10 (7164)

Pin=250mW/Area Scan (81x81x1): Interpolated grid: dx=12mm, dy=12mm
Maximum value of SAR (interpolated) = 20.5 W/kg

Pin=250mW/Zoom Scan (7x7x7)/Cube 0: Measurement grid: dx=5mm, dy=5mm, dz=5mm
Reference Value = 86.583 V/m; Power Drift = 0.02 dB
Peak SAR (extrapolated) = 27.4 W/kg
SAR(1 g) = 13.4 W/kg; SAR(10 g) = 6.16 W/kg
Maximum value of SAR (measured) = 20.4 W/kg

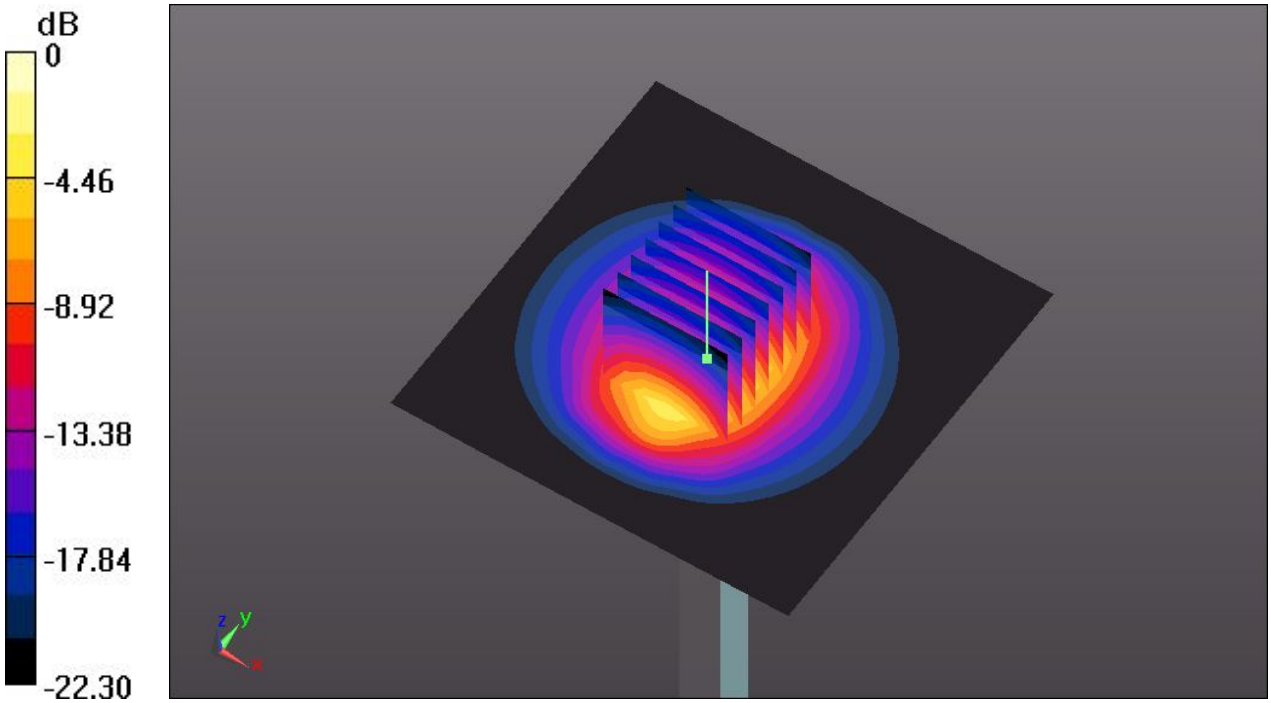

0 dB = 20.4 W/kg

Appendix B. Plots of SAR Measurement

The plots are shown as follows.

01 WLAN2.4GHz_802.11b_Edge 1_0cm_Ch1

Communication System: UID 0, WIFI (0); Frequency: 2412 MHz;Duty Cycle: 1:1
Medium: MSL_2450_140411 Medium parameters used: f = 2412 MHz; σ = 1.962 S/m; ε_r = 51.626; ρ = 1000 kg/m^3
Ambient Temperature：23.3 ℃; Liquid Temperature：22.7 ℃

DASY5 Configuration:
- Probe: EX3DV4 - SN3819; ConvF(7.07, 7.07, 7.07); Calibrated: 2013.11.27;
- Sensor-Surface: 2mm (Mechanical Surface Detection)
- Electronics: DAE4 Sn910; Calibrated: 2013.12.17
- Phantom: SAM3; Type: QDOVA002AA; Serial: TP:1149
- Measurement SW: DASY52, Version 52.8 (7); SEMCAD X Version 14.6.10 (7164)

Ch1/Area Scan (41x111x1): Interpolated grid: dx=12mm, dy=12mm
Maximum value of SAR (interpolated) = 2.19 W/kg

Ch1/Zoom Scan (7x7x7)/Cube 0: Measurement grid: dx=5mm, dy=5mm, dz=5mm
Reference Value = 3.876 V/m; Power Drift = -0.03 dB
Peak SAR (extrapolated) = 3.17 W/kg
SAR(1 g) = 1.250 W/kg; SAR(10 g) = 0.500 W/kg
Maximum value of SAR (measured) = 2.23 W/kg

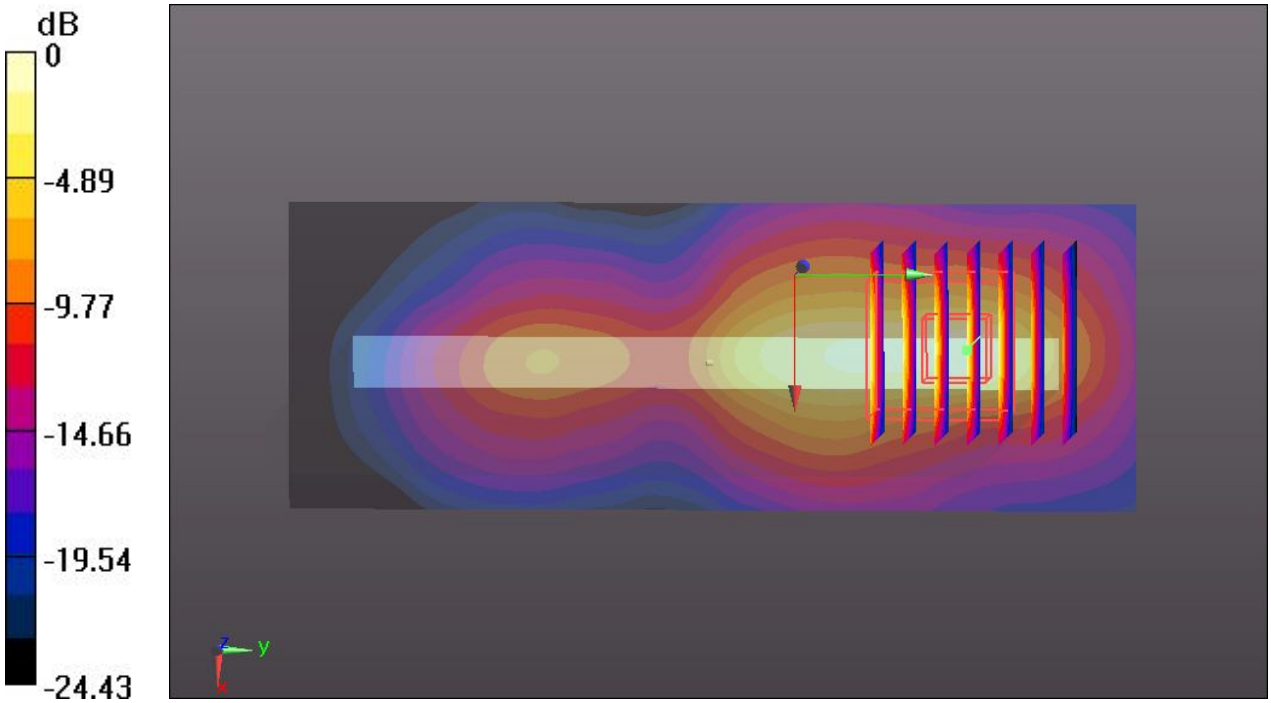

0 dB = 2.23 W/kg