WEILI

Microwave Oven

Owner's Manual

Safety Information 2

Welcome 2
Grounding 4
Excessive Energy Warning 5
Features, Benefits And Specification 6

Operating Your Microwave 8

Setting Up Your Microwave 8
Parts And Accessories 8
Turntable Installation 8
Control Panel 9
Operation 10

One-Touch Buttons 13

Baked Potato 13
Popcorn 13
Pizza 13
Beverage 13
Frozen Dinner 14
Reheat 14

Use And Care 15

Care And Cleaning 15
Troubleshooting 16

Zhongshan Donlim Weili Electrical Appliances Co., Ltd.
ADDRESS: Fusha Industrial Park, Fusha Town, Zhongshan City, Guangdong Province

WEILI

Welcome!

Congratulations, you have acquired a high-quality WEILI Microwave Oven. This unit is packed with many extra features that you will find convenient to use. Six different one-touch cooking buttons provide for convenient meal preparation and tasty snacks. It will provide you with trouble free use if you follow the safety precautions and operating instructions provided in this easy-to-use manual. Please take the time to read it, and save these instructions for future use. Please also remember to record the model, series code and serial number. They are on a label on back of the unit. Save your receipt by stapling it to this manual for convenient access.

Model number: 20PX62-L/ 20PX66-L/ 20PX69-L 20PX72-L/ 20PX75-L/ 20PX76-L 20PX78-L/ 20PX79-L/ 20PX80-L 20PX98-L

Serial number _____

Series code_____

Date of purchase_____

!! IMPORTANT SAFETY INSTRUCTIONS !!

When using electrical appliances, basic safety precautions should be followed, including the following:

WARNING! - To reduce the risk of burns, electric shock, fire, injury to persons, or exposure to excessive microwave energy:

1. Read all instructions before using the appliance.

2. Read and follow the specific PRECAUTIONS TO AVOID POSSIBLE EXPOSURE TO EXCESSIVE MICROWAVE ENERGY found on page 5.

3. This appliance must be grounded. Connect only to properly grounded outlet. See "IMPORTANT GROUNDING INSTRUCTIONS" found on page 4.

4. Install or locate this appliance only in accordance with the provided installation instructions.

5. Some products such as whole eggs and sealed containers, like closed glass jars, are able to explode and should not be heated in this oven.

6. Use this appliance only for its intended use as described in the manual. Do not use corrosive chemicals or vapors in this appliance. This type of oven is specifically designed to heat, cook, or dry food. It is not designed for industrial or laboratory use.

7. As with any appliance, close supervision is necessary when used by children.

8. Do not operate this appliance if it has a damaged cord or plug, if it is not working properly, or if it has been damaged or dropped.

9. This appliance should be serviced only by a qualified service personnel. Contact your nearest authorized service facility for examination, repair or adjustment.

10. Do not cover or block any openings on this appliance.

11. Do not store this appliance outdoors. Do not use this product near water. For example, do not use near a kitchen sink, in a wet basement, near a swimming pool, or similar locations.

12. Do not immerse cord or plug in water.

13. Keep cord away from heated surfaces.

14. Do not let cord hang over edge of table or counter.

15. When cleaning the surfaces between the door and the oven that come together upon closing, use only mild, nonabrasive soaps or detergents applied with a sponge or soft cloth.

16. To reduce the risk of fire in the oven cavity:

- Do not overcook food. Carefully attend appliance when paper, plastic, or other combustible materials are placed inside the oven to facilitate cooking.
- Remove wire twist ties from paper or plastic bags before placing bag in oven.
- If materials inside the oven ignite, keep oven door closed, turn oven off and disconnect the power cord, or shut off power at the fuse or circuit breaker panel.
- Do not use the cavity for storage purposes. Do not leave paper products, cooking utensils, or food in the cavity when not in use.

17. Liquids such as water, coffee, or tea are able to be overheated beyond the boiling point without appearing to be boiling. Visible bubbling or boiling when the container is removed from the microwave oven is not always present. THIS COULD RESULT IN VERY HOT LIQUIDS SUDDENLY BOILING OVER WHEN THE CONTAINER IS DISTURBED OR A UTENSIL IS INSERTED INTO THE LIQUID.

18. This appliance is intended for household use only.

!! SAVE THESE INSTRUCTIONS !!

Important Grounding Instructions

This appliance must be grounded. In the event of an electrical short circuit, grounding reduces the risk of electric shock by providing an escape wire for the electric current.

WARNING Improper use of the grounding plug can result in a risk of electric shock.

Electrical Requirements

The electrical requirements are 120 volt 60 Hz, AC only, 15 amp.

It is recommended that a separate circuit serving only the oven be provided.

The oven is equipped with a 3-prong grounding plug. It must be plugged into a wall receptacle that is properly installed and grounded.

Three-pronged (grounding) plug

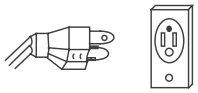

Properly polarized and grounded outlet

Power Supply Cord

1. A short power supply cord is provided to reduce the risks resulting from becoming entangled in or tripping over a longer cord.
2. Longer cord sets or extension cords are available and may be used if care is exercised in their use.
3. If long cord or extension cord is used:
   a)The marked electrical rating of the cord set or extension cord should be at least as great as the electrical rating of the appliance.
   b)The extension cord must be a grounding-type 3-wire cord, and the longer cord should be arranged so that it will not drape over the counter top or table top where it can be pulled on by children or tripped over unintentionally.

Notes:

If you have any questions about the grounding or electrical instructions, consult a qualified electrician or service person.

Neither manufacturer nor the dealer can accept any liability for damage to the oven or personal injury resulting from failure to observe the electrical connection procedures.

Radio or TV Interference

Should there be any interference caused by the microwave oven to your radio or TV, check that the microwave oven is on a different circuit, relocate the radio or TV as far away from the oven as feasible or check position and signal of receiving antenna.

WEILI

Precautions To Avoid Possible Exposure To Excessive Microwave Energy

- Do not attempt to operate this oven with the door open since open-door operation can result in harmful exposure to microwave energy. It is important not to defeat or tamper with the safety interlocks.
- Do not place any object between the oven front face and the door or allow soil or cleaner residue to accumulate on sealing surfaces.
- Do not operate the oven if it is damaged. It is particularly important that the oven door close properly and that there is no damage to the:
  1. Door (bent)
  2. Hinges and latches (broken or loosened)
  3. Door seals and sealing surfaces
- The oven should not be adjusted or repaired by anyone except properly qualified service personnel.

Features and Benefits

- 0.7 cu. ft.Oven Cavity
- 10 Power Levels
- Six Express Cook One-touch Settings
- Electronic Digital Display With Clock (LED)
- Turntable
- Time Cook
- Time And Weight Defrost
- Remind Signal
- Kitchen Timer

Specification

Power Source.....120V~60Hz
Power Consumption.....1130W
Maximum Output.....700W
Oven Capacity.....0.7 cu.ft.

How To Test For A Microwave-safe Dish

To determine if a dish is microwave-safe, place the dish in the microwave along with a glass measuring cup filled with one cup of water. Microwave for one minute on high and then carefully feel the dish. If it is warm, it is not microwave-safe.

Arcing - The microwave term for sparks in the oven. Caused by:

- Metal or foil touching the side of the microwave
- Upturned edges of foil not wrapped around the food
- Metals in the microwave such as twist ties, meat pins or metal rimmed dishes
- Recycled paper towels in the microwave that contain small flecks of metal

WEILI

Materials For Use In Microwave

To avoid arcing and other hazards, follow these instructions for the use of safe materials in the microwave.

Browning dish	Follow manufacturer's instructions.The bottom of browning dish must be at least 3/16 inch (0.5 cm) above the turntable. Incorrect usage may cause the turntable to break.
Dinnerware	Microwave-safe only . Follow manufacturer's instructions. Do not use cracked or chipped dishes.
Glassware	Heat-resistant oven glassware only. Make sure there is no metallic trim.
Oven cooking bags	Follow manufacturer's instructions. Do not close with metal tie. Make slits to allow steam to escape.
Paper plates/cups	Use for short-term cooking/warming only. Do not leave oven unattended while cooking.
Paper towels	Use to cover food for reheating and absorbing fat. Use with supervision for short-term cooking only.
Parchment paper	Use as a cover to prevent splattering or a wrap for steaming.
Plastic	Microwave-safe only. Follow the manufacturer's instructions. Boiling bags and tightly closed plastic bags should be slit, pierced or vented as directed by package. Due to various manufacturers you may receive varying performance results when using a bacon tray.
Plastic wrap	Microwave-safe only. Use to cover food during cooking to retain moisture. Do not allow plastic wrap to touch food.
Thermometers	Microwave-safe only.
Wax paper	Use as a cover to prevent splattering and retain moisture.

Materials To Avoid In Microwave

- Metal pans and bakeware
- Dishes with metallic trim
- Recycled paper products
- Brown paper bags
- Non-heat-resistant glass
- Non-microwave-safe plastics (e.g. margarine tubs)
- Food storage bags
- Metal twist ties

Setting Up Your Microwave

Installation:

1. Remove all packing materials and accessories. Examine the oven for any damage such as dents or broken door. Do not install if oven is damaged.

2. Select a level surface that provides enough open space for ventilation. Allow for 3 inches of open space next to the sides and back of the microwave. Allow for 12 inches of open space above the microwave. Do not place any items on top of microwave and do not remove the legs from the bottom of the microwave.

3. Place the microwave as far away as possible from radios and televisions. Microwave may cause interference to these appliances.

4. Plug the microwave into a standard household outlet. Check the rating label of the microwave to ensure the voltage and frequency are compatible with the outlet.

5. Do not install microwave oven a range cook top or other heat-producing appliance. Heat can damage the microwave.

Names of Oven Parts and Accessories

Remove the oven and all materials from the carton.
Your oven comes with the following accessories:

Glass tray	1
Turntable ring assembly	1
instruction maunal	1

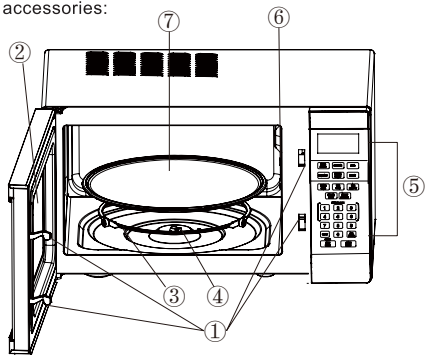

1. Safety interlock system
2. Observation window
3. Turntable ring assembly
4. Turntable shaft
5. Control panel
6. Wave Guide (Do not remove)
7. Glass tray

WARNING : FIRE AND SHOCK HAZARD.
Do not remove the mica board located on the right, inside wall of the cooking compartment. Unplug the microwave immediately and contact service support, if the mica board becomes damaged or is missing.

Turntable Installation

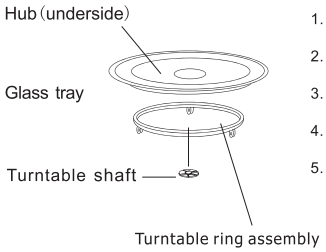

1. Never place the glass upside down. The glass tray should never be restricted.
2. Both glass tray and turntable ring assembly must always be used during cooking.
3. All food and containers of food are always placed on the glass tray for cooking.
4. The glass tray rotates either clockwise or counter-clockwise; this is normal.
5. If the glass tray or turntable ring assembly cracks or breaks, contact service support.

WEILI

Control Panel Operation

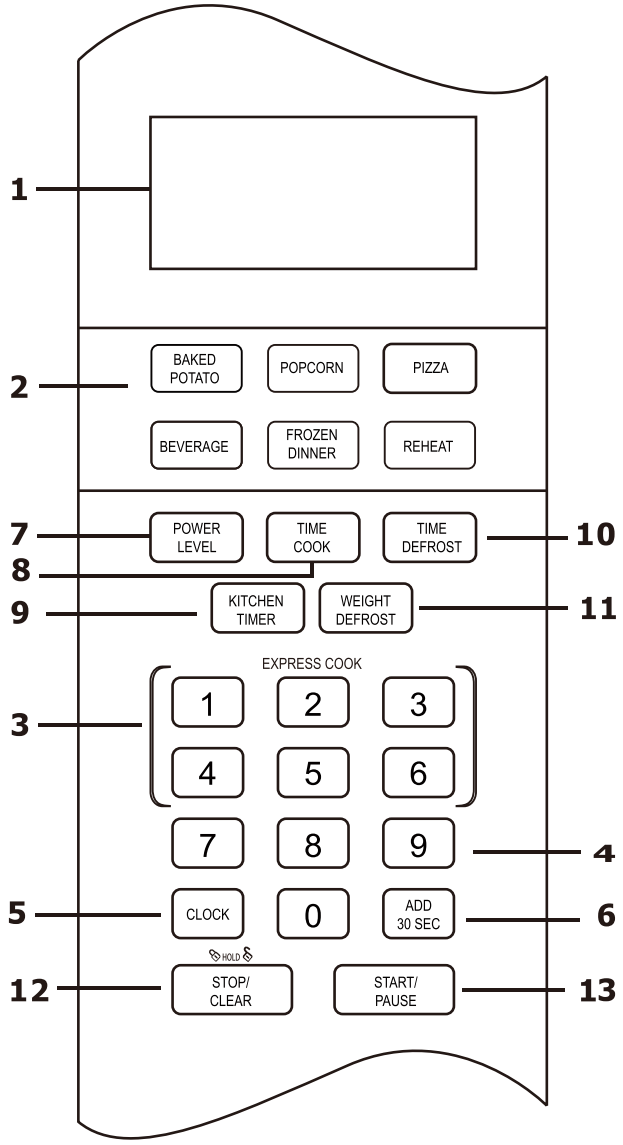

1. Display
Cooking time, power, indicators and present time are displayed.

2. One-touch Cook
Instant settings to cook popular foods.

3. Express Cook
Number Pads (1-6)

4. Number Pads (0-9)
Touch to set time, weight or the amount.

5. Clock
Touch to set the clock.

6. Add 30 Sec.
Touch it to set cooking time to add 30 seconds each at full power level.

7. Power Level
Use to set microwave power levels.

8. Time Cook
Use for multi-stage cooking. It enables cooking at multiple power and time settings automatically.

9. Kitchen Timer
The KITCHEN TIMER function can be used alone, even in the process of cooking.

10. Time Defrost
Touch to set defrosting time.

11. Weight Defrost
Touch to set the weight of the food to be defrosted

12. Stop/Clear
Clear all previous settings before cooking.

13. Start/Pause
Touch to start or stop cooking.

1. Setting The Clock

1) Touch CLOCK pad once or twice.

2) Use the number pads to enter the current time.

3) Touch CLOCK pad again.

NOTE: This is a 12 or 24 hour clock. During the cooking program, the current time can be seen by touching CLOCK pad.

2. Setting The Kitchen Timer

1) Touch KITCHEN TIMER pad once.

2) Enter the amount of time you want to count down by touching the number pads.

The maximum time is 99 min. 99 sec.

3) Touch START/PAUSE pad to start.

NOTE: Time countdown can be seen in display for 3 seconds by touching KITCHEN TIMER, and it can be cancelled by touching STOP/CLEAR pad during this 3 seconds.

3. Express

Program will start immediately after touching the number pad (1-6).

Suppose you want to set the quick cooking in 6 minutes.

1) Touch number pad 6.

2) 6:00 can be seen on display.

3) The program starts automatically.

Touch number pad	Time Minutes
1	1 Minute
2	2 Minutes
3	3 Minutes
4	4 Minutes
5	5 Minutes
6	6 Minutes

4. Add 30 sec.

1) Touch once and cooking will start immediately for 30 seconds. Touching this button repeatedly with add 30 seconds each time.
2) During the TIME COOK and TIME DEFROST, you can add 30 seconds for each push.
3) This function will not work for one-touch cooking menus and express cooking.

5. Time Cook

1) Touch TIME COOK pad.
2) Touch number pad to enter desired cooking time.
The maximum number can be entered is 99 min. 99 sec.
3) Touch POWER LEVEL pad.
4) Use the number pads to enter the power level as shown in the table below.

NUMBER	Display	POWER
1,0	100P	100%
9	90P	90%
8	80P	80%
7	70P	70%
6	60P	60%
5	50P	50%
4	40P	40%
3	30P	30%
2	20P	20%
1	10P	10%

5) Touch START/PAUSE pad.

6. Setting “Time Defrost”

1) Touch TIME DEFROST pad.
2) Enter desired defrosting time by touching correct number pads.
The longest time you can set is 99 min. 99 sec.
3) Touch START/PAUSE pad.

7. Setting "Weight Defrost"

1) Touch WEIGHT DEFROST pad.
2) Use the number pad to enter food weight "LB".
3) When icon of "OZ" flashes, use the number pad to enter food weight "OZ".
4) Touch START/PAUSE pad.

NOTE: The maximum weight is 5 LB. 16 OZ. During defrosting program, the system will pause and sound beeps to remind user to turn food over, and then press START/PAUSE to resume the defrosting.

8. One-Touch Cook

For the following menus, you do not need to input cooking power and time. Follow the steps below.

Steps:

1) Place food into oven and close it.
2) Touch the correct auto menu to select the weight or the amount.
3) Touch START/PAUSE pad.

Code	Food	Note
1	Potato	1) The result of auto cook depends on factors such as the shape and size of food, your personal preference as to the doneness of certain foods and even how well you happen to place food in the oven. If you find the result at any rate not quite satisfactory, please adjust the cooking time a little bit accordingly. 2) For beverage and potato, parameters on display are not weight but number of servings.
2	Popcorn	
3	Pizza	
4	Beverage	
5	Frozen Dinner	
6	Reheat	

1) Baked Potato

For potatoes :

1.Touch BAKED POTATO pad.

2.Touch the pad once for one potato, touch the pad twice for two potatoes, touch the pad three times for three potatoes and touch the pad four times for four potatoes.

3.Touch START/PAUSE pad.

2) Popcorn

For a 3.5 oz. bag of microwave popcorn:

1.Touch POPCORN once.

2.Touch START/PAUSE pad.

Popcorn instructions:

- To pop popcorn package evenly and avoid burning, the bag must be able to turn freely while cooking.
- Please listen to the popping sound and watch the bag until popping is completed.
- Some brands of microwave popcorn bags may be larger. Make sure that the bag matches the correct weight.

Caution: Use an oven mitt or pot holder when removing the bag, as content can be very hot.

3) Pizza

Reheating pizza:

1.Touch PIZZA pad.

2.Touch PIZZA pad once for one slice and touch the pad twice for two slices.

3.Touch START/PAUSE pad.

4) Beverage

For cups:

1.Touch BEVERAGE pad.

2.Touch BEVERAGE pad once for one cup, touch the pad twice for two cups, touch the pad three times for three cups and touch the pad four times for four cups.

3.Touch START/PAUSE pad.

5) Frozen Dinner

For frozen dinners :

1.Touch FROZEN DINNER pad.

2.Touch the pad once for one slice and touch the pad twice for two slices.

3.Touch START/PAUSE pad.

6) Reheat

For a plate of cool food :

1.Touch REHEAT pad once.

2.Touch START/PAUSE pad.

9. Two-stage Cooking

Some recipes require different stages of cooking at different temperatures.

SET STAGE 1:

1) Place food into oven and close it.Touch TIME COOK pad.
2) Use the number pads to set a cooking time.
3) Touch POWER LEVEL pad.
4) Use the number pads to enter the power level.

SET STAGE 2:

5) Touch TIME COOK pad.
6) Use the number pads to set a cooking time.
7) Touch POWER LEVEL pad.
8) Use the number pads to enter the power level.
9) Touch START/PAUSE to start.

10. Setting Child Lock

The child lock prevents unsupervised operation by children.
To set, in standby mode, press and hold STOP/CLEAR for 3 seconds.
LOC is indicated on the display.
To cancel, press and hold STOP/CLEAR for 3 seconds. LOC indication disappears.

Care and Cleaning

- Turn off the microwave and unplug the power cord from the wall socket when cleaning.
- Keep the inside of the microwave clean. When food splatters or spilled liquids adhere to microwave walls, wipe with a damp cloth. Mild detergents may be used if the microwave gets very dirty. Avoid using spray or other harsh cleaners. They may stain, streak, or dull the door surface.
- The outside of the microwave should be cleaned with a damp cloth. To prevent damage to the operating parts inside the microwave, water should not be allowed to seep into the ventilation openings.
- Wipe the window on both sides with a damp cloth to remove any spills or splatters.
- Do not allow the control panel to become wet. Clean with a soft, damp cloth. When cleaning the panel, leave the microwave door open to prevent it from accidentally turning on.
- If steam accumulates inside or around the outside of the door, wipe with a soft cloth. This may occur when the microwave is operated under high humidity. This is normal.
- It may be necessary to remove the glass tray for cleaning. Wash the tray in warm, soapy water or in a dishwasher. The roller ring and microwave floor should be cleaned regularly to avoid excessive noise. Wipe the bottom surface of the microwave with a mild detergent.
- The roller ring may be washed in mild, soapy water or in a dishwasher. When removing the roller ring, be sure to replace it in the proper position.
- Remove odors from your microwave by combining a cup of water with the juice and skin of one lemon in a microwaveable bowl. Microwave for 5 minutes. Wipe thoroughly and dry with a soft cloth.
- If the light bulb burns out, please contact professional person to have it replaced.
- The microwave should be cleaned regularly and any food deposits should be removed. Failure to maintain the microwave in a clean condition could lead to deterioration of surfaces that could adversely affect the life of the unit and could possibly result in a hazardous situation.
- Please do not dispose of this appliance into a regular garbage receptacle. Please check to see where you can dispose of such appliances.

Troubleshooting

Problem	Possible Causes	What to do
1. Dim oven light	1. In low power cooking, oven light may become dim	1. This is normal
2. Steam accumulating on door or hot air coming out of vents during cooking	2. Food releases steam during cooking	2. This is normal
3. Oven is started accidentally with no food in it	3. Microwave is started accidentally with no food in it	3. No damage will occur if the microwave runs for less than 20 seconds
4. Interference with TV reception	4. Microwave operation may affect radio and TV reception	4. This is normal
5. Microwave will not start	5a. Power cord not plugged in tightly	5a. Unplug, wait 10 seconds, then plug in again
	5b. A fuse is blown or circuit breaker trips	5b. Replace fuse or reset circuit breaker
	5c. Problem with electrical outlet	5c. Consult with professional electrician
6. Glass turntable makes noise during operation	6. The microwave cavity is dirty	6. Clean the microwave and turntable rest with warm water and microwave-safe cleaning products
7. Popcorn is over-cooked or under-cooked with "Popcorn" easy setting	7. Incorrect power level selected for size of popcorn bag	7. Refer to page 13 for "Popcorn" setting instructions. Always follow manufacturer's instructions for popcorn if the cooking time for the pre-set setting differs from the manufacturer's recommended time. Never leave popcorn cooking unattended.