microwave oven

1.2 cu.ft.capacity

precision power inverter

Advanced cooking inverter technology gives you true power control for more even cooking. Inverter technology varies the microwave energy to cook at a constant steady temperature. No more brown overcooked or burnt edges.

Instruction Booklet

Model: 30PX98-F

IMPORTANT SAFEGUARDS

When using electrical appliances, basic safety precautions should be followed, including the following:

WARNING! – To reduce the risk of burns, electric shock, fire, injury to persons, or exposure to excessive microwave energy:

1. Read all instructions before using the appliance.

2. Read and follow the specific “PRECAUTIONS TO AVOID POSSIBLE EXPOSURE TO EXCESSIVE MICROWAVE ENERGY” in the section below.

3. This appliance must be grounded. Connect only to a properly grounded outlet. See the “GROUNDING INSTRUCTIONS” section.

4. Install or locate this appliance only in accordance with the provided installation instructions in the “INSTALLATION” section.

5. DO NOT cover or block any openings on this appliance.

6. DO NOT store or use this appliance outdoors.**DO NOT** use this product near water, for example, near a kitchen sink, in a wet basement, or near a swimming pool or similar locations.

7. Use this appliance only for its intended use as described in this manual. **DO NOT** use corrosive chemicals or vapors in this appliance. This type of oven is specifically designed to heat, cook or dry food. It is not designed for industrial or laboratory use. The use of corrosive chemicals in heating or cleaning will damage the appliance and may result in radiation leaks.

8. When cleaning surfaces of door and oven that come together when closing the door, use only mild, nonabrasive soaps or detergents appliedwith a sponge or soft cloth.

9. DO NOT allow children to use this appliance, unless closely supervised by an adult.

10. DO NOT operate this appliance if it has a damaged cord or plug, if it is not working properly, or if it has been damaged or dropped.

11. DO NOT immerse cord or plug in water.

12. Keep cord away from heated surfaces.

13. DO NOT let cord hang over edge of table or counter.

14. This appliance should only be serviced by qualified service personnel. See the Warranty section or contact the your nearest service facility for examination, repair or adjustment.

15. Some products such as whole eggs and sealed containers, for example, closed glass jars, may explode and should not be heated in this oven.

16. To reduce the risk of fire in the oven cavity:
a. **DO NOT** overcook food.
b. **DO NOT** leave the microwave unattended if paper, plastic or other combustible materials are placed inside the oven to facilitate cooking.
c. Remove wire twist-ties from paper or plastic bags before placing bag in oven.

17. If materials inside the oven should ignite,
a. Keep oven door CLOSED
b. Turn oven off
c. Disconnect the power cord or shut off power at the fuse or circuit breaker panel

18. Liquids, such as water, coffee, or tea are able to be overheated beyond the boiling point without appearing to be boiling due to surface tension of the liquid. Visible bubbling or boiling when the container is removed from the microwave oven is not always present.

THIS COULD RESULT IN VERY HOT LIQUIDS SUDDENLY BOILING OVER WHEN A SPOONOR OTHER UTENSIL IS INSERTED INTO THE LIQUID.
To reduce the risk of injury to persons:
a. **DO NOT** overheat the liquid.
b. Stir the liquid both before and halfway through heating it.
c. **DO NOT** use straight-sided containers with narrow necks.
d. After heating, allow the container to stand in the microwave oven for a short time before removing the container.
e. Use extreme care when inserting a spoon or other utensil into the container.

19. DO NOT ATTEMPT TO OPERATE THIS OVER WITH:
a) Object caught in door.
b) Door that does not close properly.
c) Damaged door hinge, latch or sealing surface.

20. Make sure the utensils do not touch the interior walls during cooking.

21. Any accessories not recommended by the manufacturer may cause injuries to persons.

22. The lamp of microwave oven is not intended for other purposes.

23. The appliances are not intended to be operated by means of an external timer or separate remote –control system.

24. This appliance can be used by children aged from 8 years and above and persons with reduced physical, sensory or mental capabilities or lack of experience and knowledge if they have been given supervision or instruction concerning use of the appliance in a safe way and understand the hazards involved. Children shall not play with the appliance. Cleaning and user maintenance shall not be performed by children unless they are older than 8 and supervised. Keep the appliance and its cord out of reach of children less than 8 years old.

25. This appliance is not intended for use by persons (including children) with reduced physical, sensory or mental capabilities, or lack of experience and knowledge, unless they have been given supervision or instruction concerning use of the appliance by a person responsible for their safety.

26. A steam cleaner is not to be used.

27. This device complies with Part 18 of the FCC Rules.

28. The surfaces are liable to get hot during use.

: **CAUTION:HOT SURFACE**

Household use only

SAVE THESE INSTRUCTIONS

WARNING! TO AVOID THE RISK OF FIRE

1. DO NOT operate the oven empty. The microwave energy will reflect continuously throughout the oven causing overheating and damage if food or water is not present to absorb energy.

2. DO NOT store flammable materials next to, on top of, or in the oven.

3. DO NOT dry clothes, newspapers or other materials in the oven. Or usenewspaper or paper bags for cooking.

4. DO NOT hit or strike the Control Panel. Damage to the controls may occur.

5. DO NOT use recycled paper products unless the paper product is labeled as safe for microwave oven use. Recycled paper product may contain impurities which may cause arcing.

6. DO NOT use the cavity for storage purposes. Do not leave paper products, cooking utensils or food in the cavity when not in use.

7. DO NOT use this microwave oven to heat corrosive chemicals (for example, sulfides and chlorides). Vapors from such corrosive chemicals may interact with the contact and springs of the safety interlock switches thereby rendering them inoperable.

8. DO NOT leave the microwave unattended when paper, plastic or other combustible materials are placed inside the oven to facilitate cooking.

9. Some Styrofoam trays (like those that meat is packaged on) have a thin strip of metal embedded on the bottom. When microwaved, the metal can burn the floor of the oven or ignite a paper towel.

10. Keep the waveguide cover (Mica Sheet) clean at all times. Wipe the oven interior with a soft damp cloth after each use. If you leave grease or fat anywhere in the cavity it may overheat, smoke or even catch fire when the oven is used again.

11. Never heat oil or fat for deep frying as you cannot control the temperature and doing so may lead to overheating and fire.

12. This appliance is intended for HOUSEHOLD USE ONLY.

GLASS TURNTABLE

1. DO NOT cook directly on the turntable. It can crack, cause injury or damage to the oven. Always place food in a microwave safe dish.

2. DO NOT operate the oven without the Glass Turntable in place. Improper cooking or damage to the oven could result. Verify that the Glass Turntable is properly engaged and rotating by observing its rotation when you press Start.

3. Use the Glass Turntable specifically designed for this oven. **DO NOT** substitute any other glass tray.

4. If the Glass Tray is hot, allow to cool before cleaning or placing in water.

PRECAUTIONS TO AVOID POSSIBLE EXPOSURE TO EXCESSIVE MICROWAVE ENERGY

1. DO NOT attempt to operate this oven with the door open as open-door operation can result in harmful exposure to microwave energy. It is important not to defeat or tamper with the safety interlocks.

2. DO NOT place any object between the oven front face and the door or allow soil or cleaner residue to accumulate on sealing surfaces.

3. DO NOT operate the oven if it is damaged. It is particularly important that the oven door closes properly and that there is no damage to the following:

a. door (bent)
b. hinges and latches (broken or loosened)
c. door seals and sealing surfaces.

4. The oven should not be adjusted or repaired by anyone except properly qualified service personnel.

HOUSEHOLD USE ONLY

GROUNDING INSTRUCTIONS

This appliance must be grounded. In the event of an electrical short circuit, the grounding plug reduces the risk of electric shock by providing an escape wire for electric current. This appliance is equipped with a cord having a grounding wire with a grounding plug. The plug must be plugged into an outlet that is properly installed and grounded. It is recommended that a separate circuit serving only the oven be provided.

WARNING – Improper use of grounding can result in a risk of electric shock. DO NOT cut or remove the third (ground) prong from the power cord under any circumstances.

A short power cord is provided to reduce the risk of the user becoming entangled in or tripping over a longer cord. Longer cord sets or extension cords are available and may be used if care is exercised in their use. If an extension cord is used, the marked electrical rating of the cord should be at least as great as the electrical rating of the appliance. The extension cord must be a grounding-type 3-wire cord. The longer cord should be arranged so it does not drape over the table top or counter when children can pull on it or trip over it.
Consult a qualified electrician or serviceman if the grounding instructions are not completely understood or if doubt exists as to whether the appliance is properly grounded.
Neither the manufacturer nor the dealer can accept any liability for damage to the appliance or personal injury resulting from failure to observe the electrical connection procedures.

Using an Adapter

Due to potential safety hazards, we strongly recommend against the use of an adapter plug. However, if you choose to use an adapter, where local codes may permit, a temporary connection may be made to a properly grounded two prong wall outlet by the use of a cUL/CSA listed adapter, which is available at most hardware stores.

GENERAL USE

Arcing

Arcing is the microwave term for sparks in the oven. If you see arcing,press the Stop/Clear keypad immediately and correct the problem.Arcing is caused by the following:

1.Metal or foil touching the side of the microwave
2.Upturned edges of foil not wrapped around the food
3.Metals in the microwave such as twist ties,meat pins or metal rimmed dishes
4.Recycled paper towels

Guidelines and safety tips for microwave cooking:

1. DO NOT use sealed jars or narrow neck bottles for cooking or reheating.They may shatter.

2. Remove plastic store wrap before cooking or defrosting foods in the oven.

3. Avoid inserting nails, wire, etc. through any holes in the unit during operation. Never insert a wire, nail or any other metal objects through the holes on the cavity or any other holes or gaps, because such objects may cause electric shock and microwave leakage.

4. Remove the wire twist-ties and metal handles from paper or plastic containers/bags before placing them in the oven.

5. The contents of feeding bottles and baby food jars should be stirred or shaken and the temperature should be checked before serving in order to avoid burns. Baby bottles fitted with a screw cap or teat are considered to be sealed containers.

6. Cooking utensils may become hot because of heat transferred from the heated food. Potholders may be needed to handle the utensil.

7. Use only thermometers that are specifically designed for use in microwave ovens.

8. DO NOT operate any heating or cooking appliances beneath this appliance.

9. The glass tray and roller ring must be in place when you operate the oven.

10. NEVER use your microwave oven for HOME CANNING. The oven is not designed to permit proper canning. Improperly canned food may spoil and be dangerous to consume.

11. Cooking times given in the cooking guide are approximate. Factors that may affect cooking are starting temperature,

altitude, volume, size and shape of food and utensils used. As you become familiar with the oven,you will be able to adjust for these factors.

12. DO NOT overcook food. If food is undercooked, it can always be returned to the oven for further cooking. If food is overcooked, nothing can be done. Always start with minimum cooking times.

13. Small quantities of food or foods with low moisture content can burn, dry out or catch on fire if cooked too long.

14. DO NOT boil eggs in their shell. Pressure may build up and the eggs may explode.

15. Potatoes, apples, egg yolks, whole acorn squash and sausage are some examples of food with NONPOROUS SKINS. These must be pierced before cooking to prevent bursting.

16. POPCORN must be popped in a microwave corn popper. Microwave popping corn produces a lower yield than conventional popping. **DO NOT** use oven for popcorn unless popped in a microwave approved popcorn utensil or unless it's commercially packaged and recommended especially for microwave ovens. **DO NOT** use oil unless specified by the manufacturer. Slowly open the microwave corn popper dish cover or the microwave popcorn package so that escaping steam is away from your face.

17. HEATED LIQUIDS can ERUPT if not mixed with air. DO NOT heat liquids in your microwave oven without first stirring.

18. DO NOT attempt to tamper with or make any adjustments or repairs to oven door, control panel or any other part of the oven. **DO NOT** remove outer casing from oven.

19. Pot Holders should always be used when removing items from the oven.Heat is transferred from hot food to the cooking container and from the container to the Glass Tray. The Glass Tray can also be very hot after removing the cooking container from the oven.

UTENSILS

CAUTION:
Personal Injury Hazard

Tightly closed utensils could explode. Closed containers should be opened and plastic pouches should be pierced before cooking. See the instructions below on “Utensils for use in the microwave” and “Utensils to avoid in the microwave”. When in doubt if a utensil is safe for microwave use, you can test the utensil in question by following using the procedure below.

Utensil Test:

Fill a microwave-safe container with 1 cup(250ml) of cold water along with the utensil in question. Cook on maximum power for 1 minute. Carefully feel the utensil. If the empty utensil is warm, do not use it for microwave cooking.

Do not exceed 1 minute cooking time.

To avoid arcing(see the General Use section) and other hazards, use the recommended utensils in the “Utensils for use in the microwave” section below.

Utensils for Use in the Microwave

Aluminum foil	Use for shielding only. Small smooth pieces can be used to cover thin parts of meat or poultry to prevent overcooking. Arching* can occur if foil istoo close to oven walls. The foil should be at least 1 inch (2.5cm) away from oven walls.
Browning dish	Use to brown the exterior of small items such as steaks, chops or packages. Follow the directions provided with your browning dish.
Ceramic porcelain stoneware	Use microwave safe only. DO NOT use cracked or chipped dishes. Never use dishes with metal trim.
Glassware	Microwave safe only. Follow manufacturer's instructions. Do not use cracked or chipped dishes.
Oven cooking bags	Follow manufacturer's instructions. DO NOT close with metal tie. Make slits to allow steam to escape.
Paper plates/cups	Use for short-term cooking/warming only. DO NOT leave oven unattended while cooking. DO NOT use recycled paper as them may contain metal and can catch fire.
Paper towels	Use to cover food for reheating and absorbing fat. Use with supervision for short-term cooking only. DO NOT use recycled paper towels as they may contain metal and can catch fire.
Parchment paper	Use as a cover to prevent splattering or a wrap for steaming.
Plastic	Only use plastic marked microwave-safe. Other plastics may soften as the food inside gas hot. "Boiling bags" and tightly closed plastic bags should be slit, pierced or vented.
Plastic wrap	Microwave-safe only. Use to cover food during cooking to retain moisture. Leave a small opening for steam to escape. DO NOT allow plastic wrap to touch food.
Thermometers	Microwave-safe only.(meat and candy thermometers)
Wax paper	Use to cover food to prevent splattering and retain moisture.

Utensils to AVOID in the Microwave

DO NOT use the following materials in the microwave:

- Recycled paper products
- Non-heat resistant glass
- Dishes with metallic trim
- Metal or aluminum pans/bakeware,utensils
- Brown paper bags
- Non-microwave-safe plastics, such as Margarine tubs
- Wood
- Metal twist-ties
- Glass jars and bottles
- Styrofoam plates and cups
- Brown paper bags
- Food storage bags

INSTALLATION

1. Remove all packing materials and accessories. Remove any protective film found on the microwave oven cabinet surface and on the Control Panel.IMPORTANT: **DO NOT** remove the Waveguide (Mica Cover) on the inside of the oven cavity, this is to protect the magnetron.

2. Examine the oven for any damage after unpacking. Check for damage such as a misaligned door, broken door or dents in the cavity. **DO NOT** install if there is any damage.

3. Place the microwave as far away as possible from radios and televisions.The microwave oven may cause interference with these products.

4. DO NOT install the oven over a range cook-top or other heat-producing appliances or near water taps. Heat and water can damage the microwave and void the warranty.

5. Plug the microwave oven into a standard household grounded outlet.Check the rating label of the microwave to ensure the voltage and frequency are compatible with the rating of the outlet. See the "Grounding Instructions"section on page 5.

6. To ensure sufficient ventilation, the distance from the back of microwave to the wall should be at least 10 cm (4"), the side to the wall should be at least 5 cm (2"), the free distance above the top surface at least 20 cm (8"), the distance of the microwave to the ground should be at least 85cm (34").

7. The appliance must be positioned so that the plug is accessible, and must ensure good connection with the wall outlet to avoid electric shock.

8. The microwave oven must not be placed in a cabinet. The microwave oven is intended to be used freestanding.

CLEANING

MICROWAVE OVEN CARE

⚠ CAUTION

The oven should be cleaned regularly and any food deposits removed.

⚠ WARNING

1. Remove the power cord from the wall outlet before cleaning. **NEVER** immerse the appliance in water or other liquids when cleaning.

2. Failure to maintain the oven in a clean condition could lead to deterioration of the surface that could adversely affect the life of the appliance and possibly result in a hazardous situation

3. Never use harsh detergents, gasoline, abrasive cleansers or a metal brush to clean any part of the appliance.

4. Do not remove the waveguide cover.

5.Allow the Turntable to cool, remove and wash in warm, soapy water or in the dishwasher. **NOTE**: Do not put the hot Turntable directly in water immediately after cooking as it may crack.

6.Remove the Roller Ring and wash in warm soapy water. Let dry before reinstalling in the oven.

7.Food splatters or spilled liquids in the oven cavity should be cleaned after each use. Wipe with a damp cloth. Do not use any sprays or other harsh cleaners. If food has adhered to the oven walls, heat up to two cups of water with lemon juice at high power of 4 minutes or until boiling. Let stand in the microwave for 3 minutes. Wipe out the oven cavity with a damp cloth.

8.The outside surfaces should be cleaned with a damp cloth. To prevent damage tp the operating parts inside the oven, water should not be allowed to seep into the ventilation openings.

9.Wipe the glass door on both sides with a damp cloth to remove any splatters.

10. Wipe the Control Panel with a soft damp cloth. Do not allow the Control Panel to become wet. **NOTE:** When cleaning the Control Panel leave the oven door open to prevent oven from accidentally turning on or activate the Child Lock.

DESCRIPTION OF PARTS

1) Cabinet
2) Oven Window
3) Turntable Assembly
   a) Turntable Drive Shaft
   b) Roller Ring
   c) Glass Tray
4) Waveguide/Mica Cover
   (Do not remove)
5) Door Safety Lock System
6) Oven Light
7) Air Vent
8) Control Pannel

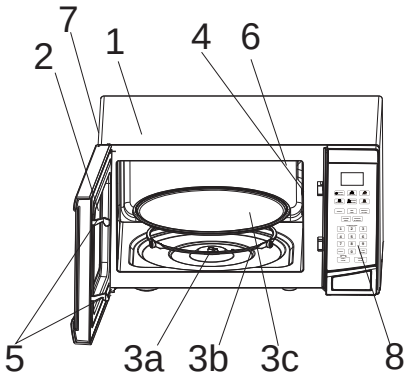

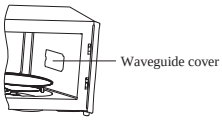

a. Display
   show cooking time, power and current time
b. Preset-programs
   Instant settings to cook 6 popular foods
c. Power
   To set power level
d. Defrost by Time
e. Time Cook
   Cook foods by time
f. Kitchen Timer
g. Defrost by Weight
h. 1-6 Express Cook touch keypads
i. Clock Set
j. Add 30 Sec

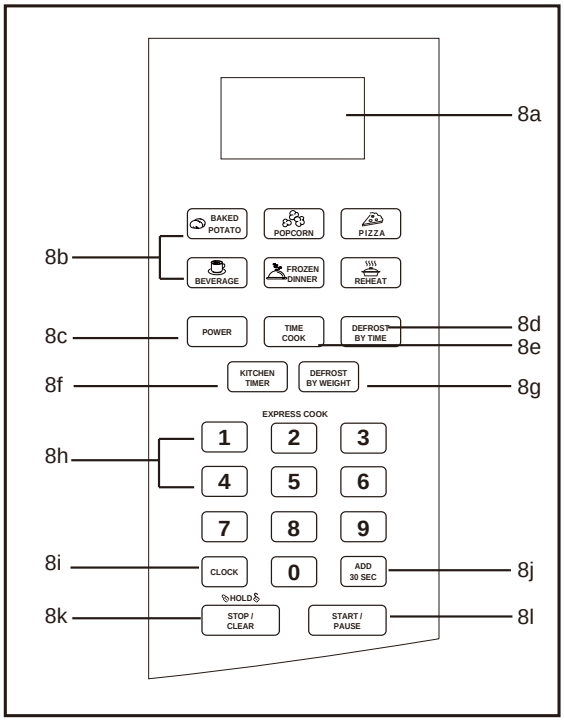

k. STOP/CLEAR
   Clear all previous settings before cooking; or go back to standby mode during cooking.
l. START/PAUSE
   Touch to start or stop cooking.

1. STOP/CLEAR

Touch to stop cooking or clear the program.

2. START/PAUSE

Touch to start or pause cooking.

3. NUMBER KEYPADS (0-9)

Touch to set the cooking time.

4. SETTING THE CLOCK

1) Touch CLOCK once (for 12 hour clock) or twice (for 24 hour).

2) Use the number keypads to enter correct time.

3) Touch CLOCK again.

Note:

This is a 12 or 24 hour clock. During the cooking program, the current time can be seen by touching the CLOCK keypad.

5. SETTING THE KITCHEN TIMER

This function can be used alone or while in the process of cooking.

1) Touch KITCHEN TIMER keypad once.

2) Enter the amount of time you want to count down by touching the number keypads.

3) Touch START/PAUSE keypad to start.

Note:

1) The maximum time you can enter is 99 minutes and 99 seconds.

2) Time count down can be seen in display for 5 seconds by touching KITCHEN TIMER, and it can be cancelled by touching the STOP/CLEAR keypad during this 5 seconds.

6. EXPRESS

Program will start immediately after touching the number keypad (1-6).

Suppose you want to set the quick cooking in 6 minutes.

1) Touch number keypad 6.
2) 6:00 can be seen on display.
3) The program starts automatically.

Touch number keypad	Time minutes
1	1 minute
2	2 minutes
3	3 minutes
4	4 minutes
5	5 minutes
6	6 minutes

7. ADD 30 SEC.

Touch to set cooking time to add 30 seconds each.

1) Touch once and cooking will start immediately for 30 seconds. Touching this button repeatedly with add 30 seconds each time.
2) During the TIME COOK and TIME DEFROST, you can add 30 seconds for each push.

8. TIME COOK

1) Touch TIME COOK keypad.
2) Touch number keypad to enter desired cooking time.

The maximum number can be entered is 99 min.99 sec.

3) Touch POWER keypad.

4) Use the number keypads to enter the power level as shown in the table below.

* Touch the POWER keypad one for power level 10 - 100% power.

NUMBER	Display	POWER
1,0*	100P	100%
9	90P	90%
8	80P	80%
7	70P	70%
6	60P	60%
5	50P	50%
4	40P	40%
3	30P	30%
2	20P	20%
1	10P	10%

5) Touch START/PAUSE keypad.

9. SETTING “DEFROST BY TIME”

1) Touch DEFROST BY TIME keypad.

2) Enter desired defrosting time by touching number keypads.

The longest time you can set is 99 min. 99 sec.

3) Touch START/PAUSE keypad.

10. SETTING “DEFROST BY WEIGHT”

1) Touch DEFROST BY WEIGHT keypad.

2) Use the number keypad to enter food weight in pounds “LB”.

3) When the “OZ” icon flashes, use the number keypad to enter food weight in ounces.

4) Touch START/PAUSE keypad.

Note:

The maximum weight is 5 LB. 16 OZ. During the defrosting program, the microwave will beep to remind the user to turn food over. Press the START/PAUSE keypad to resume the defrosting.

11. ONE-TOUCH COOK

For the following menus, you do not need to input cooking power and time. Follow the steps below.

Steps:

1) Place food into oven and close the door.

2) Touch the correct auto menu keypad to select the weight or the amount.

3) Touch START/PAUSE keypad.

Code	Food	Note
1	Potato	The result when using auto cook depends on factors such as the shape and size of food or your personal preference of the doneness of certain foods.
2	Popcorn	
3	Pizza	
4	Beverage	
5	Frozen dinner	
6	Reheat	

1) Baked Potato

Each potato about 3.5-5.3oz

1. Touch BAKED POTATO once for each potato to be cooked.

1 potato	6 min
2 potatoes	8 min
3 potatoes	10 min
4 potatoes	12 min

2. Touch START/PAUSE keypad

2) Popcorn

For microwave popcorn:

1. Touch POPCORN.

AMOUNT	COOKING TIME
1 (1.2oz.)	1 min. 45sec.
2 (3.0oz.)	2 min. 25sec.
3（3.5oz）	2 min. 35sec.

2. Touch START/PAUSE keypad

Popcorn instruction:

●To pop package evenly and avoid burning, the bag must be able to turn freely while cooking

●Please listen to the popping sound and watch the bag until the popping is completed. Some brands of microwave popcorn bags may be larger. Make sure that the bag matches the correct weight.

⚠ CAUTION

Use an oven mitt or potholder when removing the bag, as contents can be very hot.

3) Pizza

Reheating pizza:

1. Touch PIZZA keypad.
2. Touch PIZZA once for one slice and touch the keypad twice for two slices.
3. Touch START/PAUSE keypad

4) Beverage

A standard cup is 250ml (8 oz.):

1. Touch BEVERAGE once for each cup to be heated.

1 cup	50sec
2 cups	2 min
3 cups	2 min. 50sec
4 cups	3 min. 40sec

3. Touch START/PAUSE keypad.

5) Frozen Dinner

For frozen dinners:

1. Touch FROZEN DINNER keypad.
2. Touch START/PAUSE keypad.

6) Reheat

For a plate of cold food:

1. Touch REHEAT keypad once.
2. Touch START/PAUSE keypad.

12. TWO-STAGE COOKING

This enables cooking at multiple power levels and time settings.

SET STAGE 1:

1) Place food into oven and close the door. Touch TIME COOK keypad.

2) Use the number keypads to set a cooking time.

3) Touch POWER keypad.

4) Use the number keypads to enter the power level.

SET STAGE 2:

5) Touch TIME COOK keypad.

6) Use the number keypads to set a cooking time.

7) Touch the POWER keypad.

8) Use the number keypads to enter the power level.

9) Touch START/PAUSE to start.

13. SETTING CHILD LOCK

The child lock prevents unsupervised operation by children.

To set, in standby mode, press and hold STOP/CLEAR for 3 seconds.

LOC is indicated in the display window.

To cancel, press and hold STOP/CLEAR for 3 seconds.

LOC indication will disappear from the display window.

UNIT SPECIFICATIONS

Power Consumption:	120V ~ 60Hz, 1300W
Output (Watts):	1000W
Operation Frequency:	2450MHz
Unit Dimensions (HxWxD):	12¾” x 20½” x 15¾”
Oven Cavity Dimensions (HxWxD):	10¾” x 13¾” x 15”
Oven Capacity:	1.2 Cubic Feet
Cooking Uniformity:	Turntable
Net Weight:	33.07 Lbs.

COOKING TIPS

The following factors may affect the cooking result:

Food arrangement

Place thicker areas towards the outside of the dish, the thinner part towards the centre and spread pieces evenly.Do not overlap if possible.

Cooking time length

Start cooking with a short time setting and check to see if food needs more time when the when oven turns off. Extend the cooking time as necessary.

Cooking food evenly

Food such as chicken, hamburger or steak should be turned once during cooking.
Depending on the type of food, if applicable, stir it from outside to centre of dish once or twice during cooking.

Allow standing time

After cooking is complete,leave the food in the oven for a few minutes to allow it to complete its cooking cycle.

Browning dish

When using a browning dish always place a heat-resistant insulator such as a porcelain plate under it to prevent damage to the turntable and rotating ring.

Microwave safe plastic wrap

When cooking food with high fat content, do not allow the plastic wrap to come into contact with food as it may melt.

Microwave safe plastic cookware

Some microwave safe plastic cookware might not be suitable for cooking foods with high fat and sugar content. DO NOT exceed the preheating time specified in the dish instruction manual.

MAINTENANCE

SERVICING

Please check the followingTroubleshooting Guide before calling for service.

TROUBLESHOOTING

PROBLEM	POSSIBLE CAUSE	SOLUTION
Oven will not start	a) Electrical cord for oven is not plugged in b) Door is open c) Wrong operation is set	a) Plug into the outlet b) Close the door and try again c) Check instructions
Arcing or sparking	a) “Utensils to AVOID in the microwave” were used. b) The oven is operated when empty c) Spilled food remains in the cavity	a) Us e microwave-safe cookware only b) Do not operate with Microwave empty c) Clean cavity with wet cloth
Unevenly cooked foods	a) “Utensils to AVOID in the microwave” were used. b) Food is not defrosted completely c) Cooking time, power level is not suitable d) Food is not turned or stirred	a) Us e microwave-safe cookware only b) Comple tely defrost food c) Us e correct cooking time, power level d) Turn or stir food
Overcooked foods	Cooking time, power level is not suitable	Use correct cooking time, power level
Undercooked foods	a) “Utensils to AVOID in the microwave” were used. b) Food is not defrosted completely c) Oven ventilation ports are restricted d) Cooking time, power level is not suitable	a) Us e microwave-safe cookware only b) Com pletely defrost food c) Check to see that the oven ventilation ports are not restricted d) Us e correct cooking time, power level
Improper defrosting	a) “Utensils to AVOID in the microwave” were used. b) Cooking time, power level is not suitable c) Food is not turned or stirred	a) Us e microwave-safe cookware only b) Us e correct cooking time, power level c) Turn or stir food

LIMITED WARRANTY

ZHONGSHAN DONLIM WEILI ELECTRICAL APPLIANCES CO., LTD. Warrants that this appliance shall be free from defects in materialand workmanship for:
-one year on parts and labor with proof of purchase

During the' in-warranty' period, defective products will be repaired or replaced at the discretion of the retailer and/or ZHONGSHAN DONLIM WEILI ELECTRICAL APPLIANCES CO., LTD. This warranty covers normal domestic usage and does not cover damage which occurs in shipment or failure which results from alteration, accident, misuse, abuse, glass breakage, neglect, commercial use or improper maintenance.

A defective product should be return to the original place of purchase within the retailer's stipulated return/exchange period. If you are unable to have a defective product replaced under warranty by the retailer, you may contact us for assistance by e-mail or telephone as listed below.

E-mail: service_salton@weili.com.cn
Telephone: 1-855-680-3660

*Return/exchange policies at each retailer vary and may differ from the Zhongshan Donlim Weili Electrical Appliances Co., Ltd.
1 year limited warranty period.