MICROWAVE OVEN

INSTRUCTION MANUAL

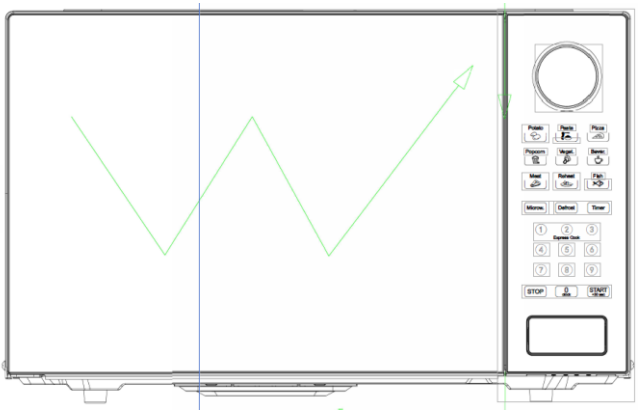

A30PXP48-A00

IMPORTANT SAFETY INSTRUCTIONS
READ CAREFULLY AND KEEP FOR FUTURE REFERENCE
Household use only
SAVE THESE INSTRUCTIONS

IMPORTANT SAFEGUARDS

When using electrical appliances basic safety precautions should be followed, including the following:

WARNING – To reduce the risk of burns, electric shock, fire, injury to persons, or exposure to excessive microwave energy:

1. Read all instructions before using the appliance.
2. Read and follow the specific "PRECAUTIONS TO AVOID POSSIBLE EXPOSURE TO EXCESSIVE MICROWAVE ENERGY" found on page ?.
3. This appliance must be grounded. Connect only to properly grounded outlet. See "GROUNDING INSTRUCTIONS" found on page ?.
4. Install or locate this appliance only in accordance with the provided installation instructions.
5. Some products such as whole eggs and sealed containers – for example, closed glass jars – are able to explode and should not be heated in this oven.
6. Use this appliance only for its intended use as described in the manual. Do not use corrosive chemicals or vapors in this appliance. This type of oven is specifically designed to heat, cook, or dry food. It is not designed for industrial or laboratory use.
7. As with any appliance, close supervision is necessary when used by children.
8. Do not operate this appliance if it has a damaged cord or plug, if it is not working properly, or if it has been damaged or dropped.
9. This appliance should be serviced only by qualified service personnel. Contact nearest authorized service facility for examination, repair, or adjustment.
10. Do not cover or block any openings on the appliance.
11. Do not store this appliance outdoors. Do not use this product near water – for example, near a kitchen sink, in a

wet basement, near a swimming pool, or similar locations.

12. Do not immerse cord or plug in water.

13. Keep cord away from heated surfaces.

14. Do not let cord hang over edge of table or counter.

15. When cleaning surfaces of door and oven that comes together on closing the door, use only mild, nonabrasive soaps, or detergents applied with a sponge or soft cloth.

16. To reduce the risk of fire in the oven cavity:

    a. Do not overcook food. Carefully attend appliance when paper, plastic, or other combustible materials are placed inside the oven to facilitate cooking.

    b. Remove wire twist-ties from paper or plastic bags before placing bag in oven.

    c. If materials inside the oven ignite, keep oven door closed, turn oven off, and disconnect the power cord, or shut off power at the fuse or circuit breaker panel.

    d. Do not use the cavity for storage purposes. Do not leave paper products, cooking utensils, or food in the cavity when not in use.

17. Liquids, such as water, coffee, or tea are able to be overheated beyond the boiling point without appearing to be boiling. Visible bubbling or boiling when the container is removed from the microwave oven is not always present. THIS COULD RESULT IN VERY HOT LIQUIDS SUDDENLY BOILING OVER WHEN THE CONTAINER IS DISTURBED OR A UTENSIL IS INSERTED INTO THE LIQUID.

18. Notice for extension cord:

    a. A short power-supply cord is provided to reduce the risks resulting from becoming entangled in or tripping over a

longer cord.

b. Longer cord sets or extension cords are available and may be used if care is exercised in their use.

c. If a long cord or extension cord is used:

1) The marked electrical rating of the cord set or extension cord should be at least as great as the electrical rating of the appliance;

2) The extension cord must be a grounding-type 3-wire cord; and

3) The longer cord should be arranged so that it will not drape over the counter top or tabletop where it can be pulled on by children or tripped over unintentionally.

The following basic precautions should always be followed when using electrical appliance:

1. Read all instructions before using.
2. Make sure the voltage in your living area corresponding to the one shown on the rating label of the appliance. And the wall socket is properly grounded.
3. TO reduce the risk of fire in the oven cavity:

   a. DO not overcook the food.

   b. Remove wire twist -ties from paper or plastic bags before placing bags in the oven.

   c. Do not heat oil or fat for deep drying as the temperature of oil cannot be controlled.

   d. After use wipe the waveguide cover with a damp cloth, followed by dry cloth to remove any food splashes and grease. Built -up grease may overheat and begin to cause smoke or catch fire.

   e. If materials inside the oven should smoke or ignite, keep

oven door closed, turn oven off and disconnect the power supply.

f. Close supervision is necessary when using disposable containers made from plastic, paper or other combustible material.

4. TO reduce the risk of explosion and sudden boiling:

a. Do not place sealed containers in the oven. Baby bottles fitted with a screw cap or teat are considered to be sealed containers.

b. When boiling liquid in the oven, use the wide -mouthed container and stand about 20 seconds at the end of cooking to avoid delayed eruptive boiling of liquids.

c. Potatoes, sausage and chestnut should be peeled or pierced before cooking. Eggs in their shell, whole hard -boiled eggs should not be heated in microwave ovens since they may explode, even after microwave heating has ended.

d. The cooked liquid should not be removed out immediately. Several moments should be waited before removing. In order to avoid possible hazards caused by delayed eruptive boiling of 1iquids.

e. The contents of feeding bottles and baby food jars are to be stirred or shaken and the temperature is to be checked before consumption, in order to avoid burns.

5. Never operate the oven further if the door or door seals is damaged or the oven is malfunctioned or supply cord is damaged. Return the appliance to the nearest authorised service center for repair and maintenance. Never try to adjust or repair the oven yourself.

6. If the supply cord is damaged, it must be replaced by the manufacturer or its service agent or a qualified technician in

order to avoid a shock hazard.

7. After cooking, the container is very hot. Using gloves to take out the food and avoid steam burns by directing steam away from the face and hands.
8. Slowly lift the furthest edge of dishes cover and microwave plastic wrap and carefully open popcorn and oven cooking bags away from the face.
9. TO prevent the turntable from breaking:
   a. Let the turntable cool down before cleaning.
   b. Do not place hot foods or utensils on the cold turntable.
   c. Do not place frozen foods or utensils on the hot turntable.
10. Make sure the utensils do not touch the interior walls during cooking.
11. Failure to maintain the oven in a clean condition could lead to deterioration of the surface that could adversely affect the life of the appliance and possibly result in a hazardous situation.
12. Only use utensils that are suitable for use in microwave ovens.
13. Do not store food or any other things inside the oven.
14. Do not operate the oven without any liquid or food inside the oven. This would do damage the oven.
15. This appliance is not intended for using by young children or infirm persons without supervision.
16. When the appliance is operated in the combination mode, children should only use the oven under adult supervision due to the temperatures generated.
17. Any accessories not recommended by the manufacturer

may cause injuries to persons.

18. Do not use outdoors.
19. Save these instructions.
20. WARNING: If the door or door seals are damaged, the oven must not be operated until it has been repaired by a competent person.
21. WARNING: It is hazardous for anyone other than a competent person to carry out any service or repair operation that involves the removal of a cover which gives protection against exposure to microwave energy.
22. WARNING: Liquids and other foods must not be heated sealed container since they are liable to explode.
23. WARNING: Only allow children to use the oven without supervision when adequate instructions have been given so that the child is able to use the oven in a safe way and understands the hazards of improper use.
24. Only use utensils that are suitable for use in microwave ovens.
25. When heating food in plastic or paper containers, keep an eye on the oven due to the possibility of ignition.
26. If smoke is observed, switch off or unplug the appliance and keep the door closed in order to stifle any flames.
27. Microwave heating of beverages can result in delayed eruptive boiling, therefore care must be taken when handling the container.
28. The contents of feeding bottles and baby food jars shall be stirred or shaken and the temperature checked before consumption, in order to avoid burns.
29. Eggs in their shell and whole hard -boiled eggs should not be heated in microwave ovens since they may explode,

even after microwave heating has ended.

30. The oven should be cleaned regularly and any food deposits removed.

31. Failure to maintain the oven in a clean condition could lead to deterioration of the surface that could adversely affect the life of the appliance and possibly result in a hazardous situation.

32. During use the appliance becomes hot. Care should be taken to avoid touching heating elements inside the oven.

33. WARNING: Accessible parts may become hot during use. Young children should be kept away.

34. Do not use harsh abrasive cleaners or sharp metal scrapers to clean the oven door glass since they can scratch the surface, which may result in shattering of the glass.

35. This appliance is not intended for use by persons (including children) with reduced physical, sensory or mental capabilities, or lack of experience and knowledge, unless they have been given supervision or instruction concerning use of the appliance by a person responsible for their safety.

36. Children should be supervised to ensure that they do not play with the appliance.

37. The appliances are not intended to be operated by means of an external timer or separate remote -control system.

38. The temperature of accessible surfaces may be high when the appliance is operating.

CAUTION: HOT SURFACE

39. This device complies with Part 18 of the FCC Rules.

PRECAUTIONS TO AVOID POSSIBLE EXPOSURE TO EXCESSIVE MICROWAVE ENERGY

(a) Do not attempt to operate this oven with the door open since open-door operation can result in harmful exposure to microwave energy. It is important not to defeat or tamper with the safety interlocks.

(b) Do not place any object between the oven front face and the door or allow soil or cleaner residue to accumulate on sealing surfaces.

(c) Do not operate the oven if it is damaged. It is particularly important that the oven door close properly and that there is no damage to the: (1) door (bent), (2) hinges and latches (broken or loosened), (3) door seals and sealing surfaces.

(d) The oven should not be adjusted or repaired by anyone except properly qualified service personnel.

PRECAUTIONS TO BE OBSERVED BEFORE AND DURING SERVICING TO AVOID POSSIBLE EXPOSURE TO EXCESSIVE MICROWAVE ENERGY

(a) Do not operate or allow the oven to be operated with the door open.

(b) Make the following safety checks on all ovens to be serviced before activating the magnetron or other microwave source, and make repairs as necessary: (1) interlock operation, (2) proper door closing, (3) seal and sealing surfaces (arcing, wear, and other damage), (4) damage to or loosening of hinges and latches, (5) evidence of dropping or abuse.

(c) Before turning on microwave power for any service test or inspection within the microwave generating compartments, check the magnetron, wave guide or transmission line, and cavity for proper alignment, integrity, and connection.

(d) Any defective or misadjusted components in the interlock, monitor, door seal, and microwave generation and transmission systems shall be repaired, replaced, or adjusted by procedures described in this manual before the oven is released to the owner.

(e) A microwave leakage check to verify compliance with the Federal Performance Standard should be performed on each oven prior to release to the owner.

GROUNDING INSTRUCTIONS

This appliance must be grounded. In the event of an electrical short circuit, grounding reduces the risk of electric shock by providing an escape wire for the electric current. This appliance is equipped with a cord having a grounding wire with a grounding plug. The plug must be plugged into an outlet that is properly installed and grounded.

WARNING – Improper use of the grounding can result in a risk of electric shock. Consult a qualified electrician or serviceman if the grounding instructions are not completely understood, or if doubt exists as to whether the appliance is properly grounded, and either:

1) If it is necessary to use an extension cord, use only a 3-wire extension cord that has a 3-blade grounding plug, and a 3-slot receptacle that will accept the plug on the appliance. The marked rating of the extension cord shall be equal to or greater than the electrical rating of the appliance, or

2) Do not use an extension cord. If the power supply cord is too short, have a qualified electrician or serviceman install an outlet near the appliance.

INSTALLATION

1. Take out all the packing. if there is a safe film over the oven, tear it off before Use. Check carefully for damage. If any, immediately notify dealer or send to the manufacturer’s

service center.

2. Microwave ovens must be placed under dry and non-corrosiveness environments, kept away from heat and humidity, such as gas burner or water tank.
3. To ensure sufficient ventilation, the distance of the back of microwave to the wall should be at least 10 cm, the side to the wall should be at least 5 cm, the free distance above the top surface at least 20 cm. the distance of the microwave to the ground should be at least 85 cm.
4. The position of the oven shall be such that it is far from the TV, Radio or antenna as picture disturbance, or noise may occur.
5. The appliance must be positioned so that the plug is accessible, and must ensure a good grounding in case leakage, ground loop can be formed to avoid electric shock.
6. The microwave oven must be operated with the door closed.
7. The microwave oven shall not be placed in a cabinet.
8. The back of the oven must be placed against a wall.
9. As there is manufacturing residue or oil remained on the oven cavity or heat element, it usually would smell the odor, even a slight smoke, It is normal case and would not occur after several times use, keep the door or window open to ensure good ventilation. So it is strongly recommended to place a cup of water in the turntable, setting at high power and operate for several times.

CLEANING

MICROWAVE OVEN CARE

⚠ CAUTION

The oven should be cleaned regularly and any food deposits removed.

⚠ WARNING

1. It is hazardous for anyone other than a competent person to carry out any service or repair operation that involves the removal of a cover which gives protection against exposure to microwave energy
2. Remove the power cord from the wall outlet before cleaning
3. Failure to maintain the oven in a clean condition could lead to deterioration of the surface that could adversely affect the life of the appliance and possibly result in a hazardous situation
4. The oven should be cleaned regularly and any food deposits removed
5. Details for cleaning door seals, cavities and adjacent parts.
6. Never use hard detergent, gasoline, abrasive powder or metal brush to clean any part of the appliance
7. Do not remove the waveguide cover
8. When the microwave oven has been used for a long time, there may be some strange odors exist in oven, Following 3 methods can get rid of them:
   a) Place several lemon slices in a cup, then heat with high power for 2-3 min.
   b) Place a cup of red tea in oven, then heat with high power.
   c) Put some orange peel into oven, and then heat them with high power for 1 minute.

TIPS FOR CLEANING

Exterior:

Wipe the enclosure with a dampened soft cloth

Door:

Using a dampened soft cloth, wipe clean the door and window

Wipe the door seals and adjacent parts to remove any spill or spatter
Wipe the control panel with a slightly dampened soft cloth
Interior walls:
Wipe clean the interior surfaces with a dampened soft cloth
Wipe clean the waveguide cover to remove any food splashed
Turntable / Rotation ring / Rotation axis:
Wash with mild soap water
Rinse with clean water and allow drying thoroughly

PRODUCT INSTRUCTION

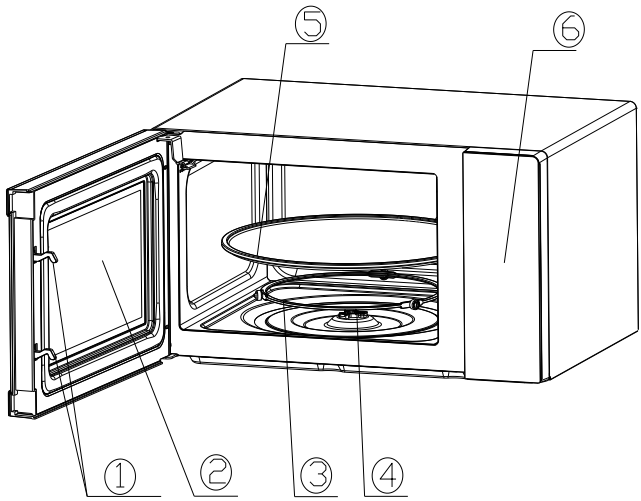

1) Door lock

Microwave oven door must be properly closed in order for it to operate.

2) Viewing window

Allow user to see the cooking status

3) Rotating ring

The glass turntable sits on its wheels; it supports the turntable and

helps it to balance when rotating

1) **Rotating axis**

The glass turntable sits on the axis; the motor underneath it drives the turntable to rotate

2) **Turntable**

The food sits on the turntable, its rotation during operation helps to cook food evenly

⚠ CAUTION

- Place the rotating ring first
- Fit the turntable onto the rotating axis and make sure that it is geared in properly

3) Control panel

See below in details (the control panel is subject to change without prior notice)

4) Waveguide cover

It is inside the air fryer oven, next to the wall of control panel.

⚠ WARNING

Never remove the waveguide cover.

INSTALLATION:

a) Install the air guide cover on the whole machine as shown in the figure

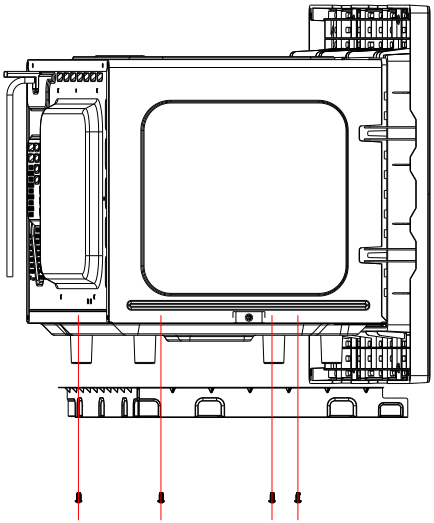

Fig.2

OPERATION OF CONTROL PANEL

1. BEFORE COOKING

The display lights up when plugged in power supply**,** then enter the standby state and display shows 1:00.

2. MICROWAVE FUNCTION

There are five firepower levels, 100P, 80P, 50P, 30P and 10P, respectively. Press the “Microw.” button continuously to select the desired microwave power. Turn the knob to select cooking time, and the time range is from 0:10 to 60:00. After selecting the cooking time, press “START/+30s” button to start work. An buzzing sound to notify completion of the operation.

HIGH	100% power output	(Applicable for quick and thorough cooking)

M.High	80% power output	(Applicable for medium express cooking)
Med	50% power output	(Applicable for steaming food)
M.Low	30% power output	(Applicable for defrosting food)
LOW	10% power output	(Applicable for keeping warm)

⚠ CAUTION

a. The max time which can be set is 60 minutes.

b. Never use the grill rack during microwave cooking.

c. Never operate the oven empty.

d. At the maximum microwave power, the oven will automatically lower the power after a certain time of cooking to lengthen the service life.

e. If you turn the food during operation, press the **Start/+30s** button once and the preset cooking procedure will continue.

f. If you intend to remove the food before the preset time, you must press **Stop/Lock** button once to clear the preset procedure to avoid unintended operation of next time use.

3. DEFROST/CLOCK

3.1 DEFROST

There are two defrost mode, dEF1 and dEF2, respectively. dEF1 for defrost by weight and dEF2 for defrost by time. Press this button to select defrost by weight or by time, and the display screen will corresponding display "dEF1" or "dEF2". Turn the knob to select food weight or defrost time. The weight range of dEF1 is from 4oz to 50oz, and the optional time range of dEF2

is from 0:10 to 60:00. After selecting the defrost weight or time, press the “START/+30s” button start to work. An buzzing sound to notify completion of the operation. The dEF1 defrost mode by weight will have a beeping sound to prompt the food to be turned over during defrosting.

Below is some food defrosting time advice:

dEF1	For defrosting, the weight range is from 4oz to 50oz.
dEF2	For defrosting, the time range is from 0:10 to 60:00.

⚠ CAUTION

a. It is necessary to turn over the food during operation to obtain uniform effect.

b. Usually defrosting will need longer time than that of cooking the food.

c. If the food can be cut by knife, the defrosting process can be considered completed.

d. Microwave penetrates around 4cm into most food.

e. Defrosted food should be consumed as soon as possible, it is not advised to put back to fridge and freeze again.

3.2 CLOCK (12 hour)

In standby mode, press “DEFROST/CLOCK” button for more than 3 seconds to enter the clock setting interface. At the same time, the display screen blinks in hours. The hour time can be set by turning the knob. After setting the hour, press the "START/+30s" button for a short time to switch to the setting

minute mode. The minutes can be set by turning the knob. After setting minutes, press the "START/+30s" button again to exit the setting mode.

4. AUTO COOKING

There are eight automatic menus, Popcorn, Potato, Pizza, Frozen Vegetable, Fresh Vegetable, Beverage, Meat and Bread respectively. Press this button to select the desired automatic menu and the display screen will corresponding display "A.1" to "A.8". Turn the knob to select the desired food weight, then press “START/+30s” button to start work. An buzzing sound to notify completion of the operation.

Display	Kind	Method
A.1	**Popcorn**	T he optional weight is 3.5oz.
A.2	**Potato**	The optional weights are 9oz, 18oz and 27oz.
A.3	**Pizza**	The optional weights are 7oz and 14oz.
A.4	**Frozen Vegetable**	The optional weights are 7oz, 14oz and 21oz.
A.5	**Fresh Vegetable**	The optional weights are 7oz, 14oz and 21oz.
A.6	**Beverage**	The optional weights are 1 cup, 2 cups or 3 cups, each one about 250ml.
A.7	**Meat**	The optional weights are 7oz, 14oz and 21oz.
A.8	**Bread**	The optional weights are 3.5oz, 7oz, 10.5oz, 14oz and 17.5oz.

⚠ CAUTION

a. The temperature of food before cooking would be 20-25℃. Higher or lower temperature of the food before cooking would require increase or decrease of cooking time.

b. The temperature, weight and shape of food will largely influence the cooking effect. If any deviation has been found to the factor noted on above menu, you can adjust the cooking time for best result.

5. STOP

In the process of cooking settings, can press “STOP” button to cancel the settings and return to standby state. In the process of working, can press “STOP” button to pause. In the standby state, can press “STOP” button again to cancel the function and return to standby state.

6. START/+30s

After setting the cooking time or food weight, press “START/+30s” button to start microwave oven immediately. In working state, can press “START/+30s” button to increase time, press one time to increase 30 seconds, but the menu mode and weight defrosting mode cannot adjust time. In pause state, can press “START/+30s” button to continue the microwave oven before cooking mode.

7. EXPRESS

In standby mode, after the food is put in and the door is closed, press the "START/+30s" button to quickly start the microwave. The default working time is 30 seconds. In the process of working,

press the "START/+30s" button once for 30 seconds. An buzzing sound to notify completion of the operation.

8. CHILD LOCK FUNCTION

Use this feature to lock the control panel when you are cleaning or so that children can not use the oven unsupervised. All the buttons are rendered inoperable in this mode.

1) Set lock: Hold **STOP** button about 3 seconds.
2) Cancel lock: Hold **STOP** button about 3 seconds

UTENSILS GUIDELINE

Depending on the cooking method, it is necessary to choose a safe and suitable vessel. If it is not properly selected, it will not only affect the cooking effect, but also cause damage to the vessel or microwave oven. Please refer to the table below for use:

Material of container	Microwave	Notes
Heat-resistant ceramic	Yes	Never use the ceramics which are decorated with metal rim or glazed

Heat-resistant plastic	Yes	Cannot be used for long time microwave cooking. High temperature resistance above 248 ℉.
Heat-resistant glass	Yes	
Grill rack	No	
Plastic film	Yes	It should not be used when cooking meat or chops as the over-temperature may do damage to the film

COOKING TIPS

The following factors may affect the cooking result:

Food arrangement

Place thicker areas towards outside of dish, the thinner part towards the centre and spread it evenly. Do not overlap if possible.

Cooking time length

Start cooking with a short time setting, evaluate it after it times out and extend it according to the actual need. Over cooking may result in smoke and burns.

Cooking food evenly

Food such as chicken, hamburger or steak should be turned once during cooking.
Depending on the type of food, if applicable, stir it from outside to centre of dish once or twice during cooking.

Allow standing time

After cooking times out, leave the food in the oven for an adequate length of time, this allows it to complete its cooking cycle and cooling it down in a gradual manner.

Whether the food is done

Color and hardness of food help to determine if it is done, these include:

- Steam coming out from all parts of food, not just the edge
- Joints of poultry can be moved easily
- Pork or poultry shows no signs of blood
- Fish is opaque and can be sliced easily with a fork

Browning dish

When using a browning dish or self-heating container, always place a heat-resistant insulator such as a porcelain plate under it to prevent damage to the turntable and rotating ring.

Microwave safe plastic wrap

When cooking food with high fat content, do not allow the plastic wrap come into contact with food as it may melt

Microwave safe plastic cookware

Some microwave safe plastic cookware might not be suitable for cooking foods with high fat and sugar content. Also, the preheating time specified in the dish instruction manual must not be exceeded.

MAINTENANCE

SERVICING

Please check the following before calling for services.

1. Place one cup of water (approx.150ml) in a glass measure in the oven and close the door securely. Oven lamp should

go off if the door is closed properly. Let the oven work for 1 min.

2. Does the oven lamp light?
3. Does the cooling fan work?

   (Put your hand over the rear ventilation openings.)
4. Does the turntable rotate?

   (The turntable can rotate clockwise or counter clockwise. This is quite normal.)
5. Is the water inside the oven hot?

If “NO” is the answer to any of the above questions, please check your wall socket and the fuse in your meter box.

If both the wall socket and the fuse are functioning properly, CONTACT YOUR NEAREST SERVICE CENTER APPROVED.

SERVICING SAFEGUARDS

⚠ WARNING

MICROWAVE RADIATION！

⚠ WARNING

It is hazardous for anyone, other than a qualified service technician, to carry out any service for repairing operation which involves removal of any cover which gives protection against exposure to microwave energy.

⚠ WARNING

The temperature of accessible surfaces may be high when the appliance is operating

⚠ WARNING

The high voltage capacitor remains charge after disconnection; short the negative terminal of H. V capacitor to the oven chassis (use a screwdriver) to discharge before touching.

⚠ WARNING

During servicing below listed parts are liable to be removed and give access to potentials above 250V to earth.

1. Magnetron
2. High voltage transformer
3. High voltage capacitor
4. High voltage diode
5. High voltage fuse

⚠ WARNING

The following conditions may cause undue microwave exposure during servicing.

Improper fitting of magnetron;

Improper matching of door interlock, door hinge and door;

Improper fitting of switch support;

Door, door seal or enclosure has been damaged.

⚠ CAUTION

1. If LED displays Err0 during working, it indicates that sensor has been short circuit and you need replace it at the nearest repaired department.

2. If LED displays Err1 during working, it indicates that sensor has been open circuit and you need replace it at the nearest repaired department.

⚠ WARNING

If the door or door seals are damaged, the oven must not be operated until it has been repaired by a competent person;

It is hazardous for anyone, other than a qualified service technician, to carry out any service for repairing operation which involves removal of any cover which gives protection

against exposure to microwave energy.

Liquids or other foods must not be heated in sealed containers since they are liable to explode;

Only allow children to use the oven without supervision when adequate instructions have been given so that the child is able to use the oven in a safe way and understands the hazards of improper use.

Correct disposal of this product	
	This marking indicates that this product should not be disposed with other household wastes throughout the EU. To prevent possible harm to the environment or human health from uncontrolled waste disposal, recycle it responsibly to promote the sustainable reuse of material resources. To return your used device, please use the return and collection systems or contact the retailer where the product was purchased. They can take this product for environmental safe recycling.