FCC 47 CFR PART 15 SUBPART C 15.231

TEST REPORT

FOR

Wireless Remote Control Doorbell

Model : RL-3930, RL-2R3930, RL-3930B, RL-2R3930B

Issued to

GUANGDONG ROULE ELECTRONICS CO.,LTD.

No. 12, Pingdong 3rd Road, Nanping Industry Community, Zhuhai City, GuangDong, China

Issued by

WH Technology Corp.

Open Site		**No.120, Ln. 5, Hudong St., Xizhi Dist., New Taipei City 221, Taiwan (R.O.C.)**
EMC Test Site	**Xizhi Office and Lab**	**7F., No.262, Sec. 3, Datong Rd., Xizhi Dist., New Taipei City 221, Taiwan (R.O.C.)**
Tel.: +886-7729-7707 Fax: +886-2- 8648-1311		

Note: This test refers exclusively to the test presented test model and sample. This report shall not be reproduced except in full, without the written approval of WH Technology Corp.. This document may be altered or revised by WH Technology Corp.. Personnel only, and shall be noted in the revision section of the document.

1. GENERAL INFORMATION **3**

2. REPORT OF MEASUREMENTS AND EXAMINATIONS **4**

2.1 LIST OF MEASUREMENTS AND EXAMINATIONS 4

3. TEST CONFIGURATION OF EQUIPMENT UNDER TEST **5**

3.1 DESCRIPTION OF THE TESTED SAMPLES 5
3.3 TEST MODE AND TEST SOFTWARE 6
3.4 TEST METHODOLOGY & GENERAL TEST PROCEDURES 7

4. TEST AND MEASUREMENT EQUIPMENT **9**

4.1 CALIBRATION 9
4.2 EQUIPMENT 9

5. ANTENNA REQUIREMENTS **11**

5.1 STANDARD APPLICABLE 11
5.2 ANTENNA CONSTRUCTION AND DIRECTIONAL GAIN 11

6. TEST OF CONDUCTED EMISSION **12**

6.1 TEST LIMIT 12
6.2 TEST PROCEDURES 12
6.3 TYPICAL TEST SETUP 13
6.4 TEST RESULT AND DATA 13

7. TEST OF RADIATED EMISSION **14**

7.1 TEST LIMIT 14
7.2 TEST PROCEDURES 14
7.3 TYPICAL TEST SETUP 15
7.4 TEST RESULT AND DATA (9KHZ ~ 30MHZ) 16
7.5 TEST RESULT AND DATA (30MHZ ~ 1GHZ, WORST EMISSIONS FOUND) 17
7.6 FOR FUNDAMENTAL RADIATION, HARMONIC RADIATION 18
7.7 TEST RESULT AND DATA (ABOVE 1GHZ) 19

8. DUTY CYCLE **20**

8.1 TEST LIMIT 20
8.2 TEST PROCEDURES 20
8.3 TEST SETUP LAYOUT 20
8.4 TEST RESULT AND DATA 20

9. 20DB BANDWIDTH **23**

9.1 TEST LIMIT 23
9.2 TEST PROCEDURES 23
9.3 TEST SETUP LAYOUT 23
9.4 TEST RESULT AND DATA 23

10. TRANSMISSION CEASE TIME **25**

10.1 TEST LIMIT 25
10.2 TEST PROCEDURES 25
10.3 TEST SETUP LAYOUT 25
10.4 TEST RESULT AND DATA 25

11. RESTRICTED BANDS OF OPERATION **27**

11.1 LABELING REQUIREMENT 27

1. GENERAL INFORMATION

Applicant	:	GUANGDONG ROULE ELECTRONICS CO.,LTD.
Address	:	No. 12,Pingdong 3rd Road, Nanping Industry Community, Zhuhai City,GuangDong, China
Manufacturer/ Factory	:	GUANGDONG ROULE ELECTRONICS CO.,LTD.
Address	:	No. 12,Pingdong 3rd Road, Nanping Industry Community, Zhuhai City,GuangDong, China
EUT	:	Wireless Remote Control Doorbell
Model Name	:	RL-3930, RL-2R3930, RL-3930B, RL-2R3930B
Trade Name	:	RL
Model Differences	:	All models have the same schematic diagram and pcb layout except for model name.

Is here with confirmed to comply with the requirements set out in the FCC Rules and Regulations Part 15 Subpart C and the measurement procedures were according to ANSI C63.10-2013. The said equipment in the configuration described in this report shows the maximum emission levels emanating

FCC part 15 Subpart C

Receipt Date : 03/23/2020 Final Test Date :24/3/2020

Tested By:

Mar. 26, 2020
(Date)

Bing Chang/ Engineer

Mar. 26, 2020
(Date)

Reviewed by:

Bell Wei / Manager

Designation Number: TW2954

2. REPORT OF MEASUREMENTS AND EXAMINATIONS

2.1 LIST OF MEASUREMENTS AND EXAMINATIONS

Standard 15.231	Item	
15.207	AC Power Conducted Emission	N/A
15.209 15.231 (b)	Radiated Emissions	PASS
15.231(a)(1)	Transmission Time	PASS
15.231(c)	20dB Bandwidth	PASS
15.203	Antenna Requirement	PASS
1.1307 1.1310 2.1091 2.1093	RF Exposure Compliance	PASS
N/A=not applicable		

3. TEST CONFIGURATION OF EQUIPMENT UNDER TEST

3.1 DESCRIPTION OF THE TESTED SAMPLES

EUT Name	:	Wireless Remote Control Doorbell
Test Model	:	RL-2R3930B
FCC ID	:	YI6RL-3930
Rated Input	:	1）Receiver 4.5Vdc (LR6 battery *3) 2）Transmitter(Remote Control) 4.5Vdc (LR44 battery *3)

Technical Specification(433.92MHz)		
Frequency Range	:	433.92MHZ±250KHZ(Declaration by manufacturer)
Modulation Type	:	FSK
Number of Channel	:	1
Antenna Type	:	PCB Antenna
Antenna Gain	:	2 dBi (Declaration by manufacturer)

3.3 TEST MODE AND TEST SOFTWARE

a. During testing, the interface cables and equipment positions were varied according to ANSI C63.10-2013.

b. The complete test system included FSK and EUT for RF test.

c. The following test modes were performed for test:433.92MHz

d.only the worst case was recorded in this report

3.4 TEST METHODOLOGY & GENERAL TEST PROCEDURES

All testing as described bellowed were performed in accordance with ANSI C63.10:2013 and FCC CFR 47 Part 15 Subpart C .

Conducted Emissions

The EUT is placed on a wood table, which is at 0.8 m above ground plane acceding to clause 15.207 & RSS-Gen and requirements of ANSI C63.10:2013. Conducted emissions from the EUT measured in the frequency range between 0.15 MHz and 30MHz are using CISPR Quasi-Peak / Average detectors.

Radiated Emissions

The EUT is a placed on a turn table, which is 0.8 m above ground plane. The turntable was rotated through 360 degrees to determine the position of maximum emission level. The EUT is placed at 3m away from the receiving antenna, which varied from 1m to 4m to find out the highest emission. Each emission was to be maximized by changing the polarization of receiving antenna both horizontal and vertical.

1)Putting the EUT on the platform and turning on the EUT (on/off button on the bottom of the EUT).
2)Setting test channel described as “Channel setting and operating condition”, and testing channel by channel.
3)For the maximum output power measurement, we followed the method of measurement ANSI C63.10:2013.
4)For the spurious emission test based on ANSI C63.10:2013, at the frequency where below 1GHz used quasi-peak detector mode; where above 1GHz used the peak and average detector mode. IF the peak value may be under average limit, the average mode will not be performed.

3.5 MEASUREMENT UNCERTAINTY

Measurement Item	Uncertainty
Radiated emission	±4.11dB
Peak Output Power(conducted)	±1.38dB
Peak Output Power(Radiated)	±1.70dB
Power Spectral Density	±1.39dB
Radiated emission(3m)	±4.11dB
Radiated emission(10m)	±3.89dB

3.6 DESCRIPTION OF THE SUPPORT EQUIPMENTS

Setup Diagram

See test photographs attached in appendix 1 for the actual connections between EUT and support equipment.

Support Equipment

Peripherals Devices:

OUTSIDE SUPPORT EQUIPMENT							
No.	Equipment	Model	Serial No.	FCC ID	Trade name	Date Cable	Power Cord
1.	N/A	N/A	N/A	N/A	N/A	N/A	N/A
2.	N/A	N/A	N/A	N/A	N/A	N/A	N/A
INSIDE SUPPORT EQUIPMENT							
No.	Equipment	Model	Serial No.	FCC ID	Trade name	Date Cable	Power Cord
1.	N/A	N/A	N/A	N/A	N/A	N/A	N/A

Note: All the above equipment /cable were placed in worse case position to maximize emission signals during emission test

Grounding: Grounding was in accordance with the manufacturer’s requirement and conditions for the intended use.

4. TEST AND MEASUREMENT EQUIPMENT

4.1 CALIBRATION

The measuring equipment utilized to perform the tests documented in the report has been calibrated once a year or in accordance with the manufacturer’s recommendations, and is traceable to recognized national standards.

4.2 EQUIPMENT

The following list contains measurement equipment used for testing. The equipment conforms to the requirement of CISPR 16-1, ANSI C63.2 and. Other required standards. Calibration of all test and measurement, including any accessories that may effect such calibration, is checked frequently to ensure the accuracy. Adjustments are made and correction factors are applied in accordance with the instructions contained in the respective.

TABLELIST OF TEST AND MEASUREMENT EQUIPMENT

Instrument	Manufacturer	Model No.	S/N	Next Cal. Date
EMI Receiver	R&S	ESHS10	830223/008	2020/06/05
LISN	Rolf Heine Hochfrequenztechnik	NNB-2/16z	98062	2020/06/10
ISN	Schwarzbeck	8-Wire ISN CAT5	CAT5-8158-0094	2020/09/20
RF Cable	N/A	N/A	EMI-3	2020/10/18
Bilog antenna(30M-1G)	ETC	MCTD2786 B	BLB16M040 04/JB-5-004	2020/05/17
Double Ridged Guide Horn antenna(1G-18G)	ETC	MCTD 1209	DRH15N020 09	2020/11/22
Horn antenna (18G-26G)	com-power	AH-826	81000	2020/08/15
LOOP Antenna (Below 30M)	com-power	AL-130	17117	2020/10/03
Pre amplifier (30M-1G)	EMC INSTRUMENT	EMC9135	980334	2020/05/02
Microwave Preamplifier (1G-18G)	EMC INSTRUMENT	EMC05184 5	980108&AT -18001	2020/10/22
Pre amplifier (18G~26G)	MITEQ	JS4-180026 00-30-5A	808329	2020/08/08
EMI Test Receiver	R&S	ESVS30 (20M-1000 MHz)	826006/002	2020/11/27
RF Cable	EMCI	N male on end of both sides (EMI4)	10m	2020/10/18
RF CABLE (1~26G)	HARBOUT INDUSTRIES	LL142MI(4 M+4M)	NA	2020/04/15
RF CABLE (1~26G)	HARBOUT INDUSTRIES	LL142MI(7 M)	NA	2020/08/08
Spectrum (9K--7GHz)	R&S	FSP7	830180/006	2020/04/12
Spectrum (9K--40GHz)	AGILENT	8564EC	4046A0032	2021/02/28
e3	AUDIX	N/A	N/A	N/A
SINGAL GENTERATOR (100k-1GHz)	HP	8648A	3619U0042 6	N/A
Power Meter	ANRITSU	ML2487	6K00001574	2020/08/08

***CALIBRATION INTERVAL OF INSTRUMENTS LISTED ABOVE IS ONE YEAR**

5. ANTENNA REQUIREMENTS

5.1 STANDARD APPLICABLE

According to the FCC Part 15 Paragraph 15.203 , an intentional radiator shall be designed to ensure that no antenna other than that furnished by the responsible party shall be used with the device.

5.2 ANTENNA CONSTRUCTION AND DIRECTIONAL GAIN

433.92MHz		
Antenna Type	:	PCB Antenna
Antenna Gain	:	2 dBi

6. TEST OF CONDUCTED EMISSION

6.1 TEST LIMIT

Conducted Emissions were measured from 150 kHz to 30 MHz with a bandwidth of 9 KHz on the 120 VAC power and return leads of the EUT according to the methods defined in ANSI C63.10-2013 The EUT was placed on a nonmetallic stand in a shielded room 0.8 meters above the ground plane as shown in section 2.2. The interface cables and equipment positioning were varied within limits of reasonable applications to determine the position produced maximum conducted emissions.

Frequency (MHz)	Quasi Peak (dB μ V)	Average (dB μ V)
0.15 – 0.5	66-56*	56-46*
0.5 – 5.0	56	46
5.0 – 30.0	60	50

*Decreases with the logarithm of the frequency.

6.2 TEST PROCEDURES

a. The EUT was placed 0.4 meter from the conducting wall of the shielding room was kept at least 80 centimeters from any other grounded conducting surface.
b. Connect EUT to the power mains through a line impedance stabilization network (LISN).
c. All the support units are connecting to the other LISN.
d. The LISN provides 50 ohm coupling impedance for the measuring instrument.
e. The FCC states that a 50 ohm, 50 micro-Henry LISN should be used.
f. Both sides of AC line were checked for maximum conducted interference.
g. The frequency range from 150 kHz to 30 MHz was searched.
h. Set the test-receiver system to Peak Detect Function and Specified Bandwidth with Maximum Hold Mode.

6.3 TYPICAL TEST SETUP

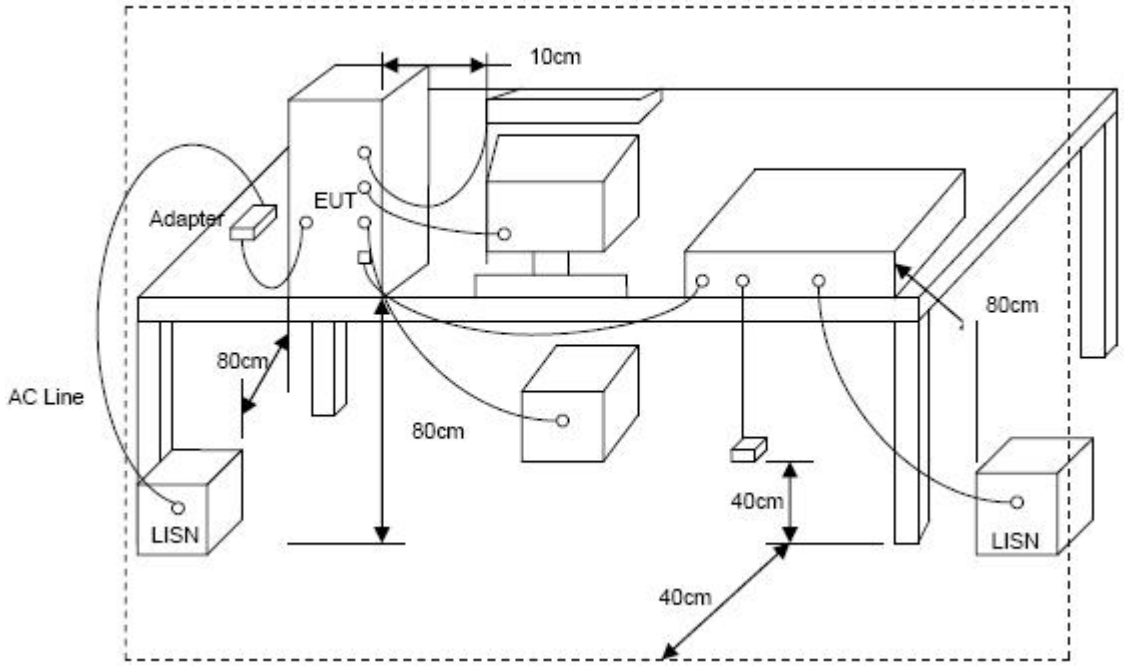

6.4 TEST RESULT :N/A

7. TEST OF RADIATED EMISSION

FCC 15.231(b)

7.1 TEST LIMIT

In any 100kHz bandwidth outside the frequency band in which the spread spectrum or digitally modulated intentional radiator is operating, the radio frequency power that is produced by the intentional radiator shall be at least 20dB below that in the 100kHz bandwidth within the band that contains the highest level of the desired power, based on either an RF conducted or a radiated measurement. If the transmitter measurement is based on the maximum conducted output power, the attenuation required under this paragraph shall be 30dB instead of 20dB. In addition, radiated emissions which fall in section 15.205(a) the restricted bands must also comply with the radiated emission limit specified in section 15.209(a).

Frequency (MHz)	Field Strength (microvolt/meter)	Measurement Distance (meters)
0.009 ~ 0.490	2400/F(kHz)	300
0.490 ~ 1.705	24000/F(kHz)	30
1.705 ~ 30.0	30	30
30 ~ 88	100	3
88 ~ 216	150	3
216 ~ 960	200	3
Above 960	500	3

7.2 TEST PROCEDURES

a. The EUT was placed on a rotatable table top 0.8 meter above ground.
b. The EUT was set 3 meters from the interference receiving antenna which was mounted on the top of a variable height antenna tower.
c. The table was rotated 360 degrees to determine the position of the highest radiation.
d. The antenna is a broadband antenna and its height is varied between one meter and four meters above ground to find the maximum value of the field strength both horizontal polarization and vertical polarization of the antenna are set to make the measurement.
e. For each suspected emission the EUT was arranged to its worst case and then tune the antenna tower (from 1 M to 4 M) and turn table (from 0 degree to 360 degrees) to find the maximum reading.
f. Set the test-receiver system to Peak or CISPR quasi-peak Detect Function and specified bandwidth with Maximum Hold Mode.

g. If the emission level of the EUT in peak mode was 3 dB lower than the limit specified, then testing will be stopped and peak values of EUT will be reported, otherwise, the emissions which do not have 3 dB margin will be repeated one by one using the quasi-peak method and reported.
h. For testing above 1GHz, the emission level of the EUT in peak mode was 20dB lower thanaverage limit (that means the emission level in peak mode also complies with the limit in average mode), then testing will be stopped and peak values of EUT will be reported, otherwise, the emissions will be measured in average mode again and reported.
i. “ Cone of radiation ” has been considered to be 3dB bandwidth of the measurement antenna.

7.3 TYPICAL TEST SETUP

Radiated Emission Test Set-Up, Frequency Below 30MHz

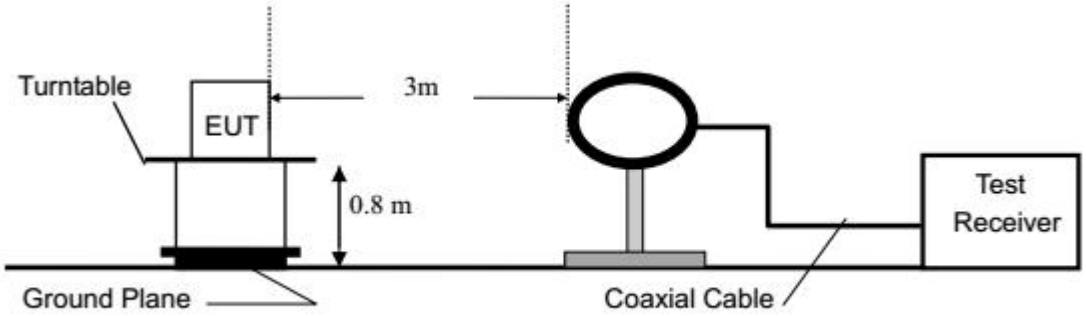

Radiated Emission Test Set-Up, Frequency 30MHz-1000MHz

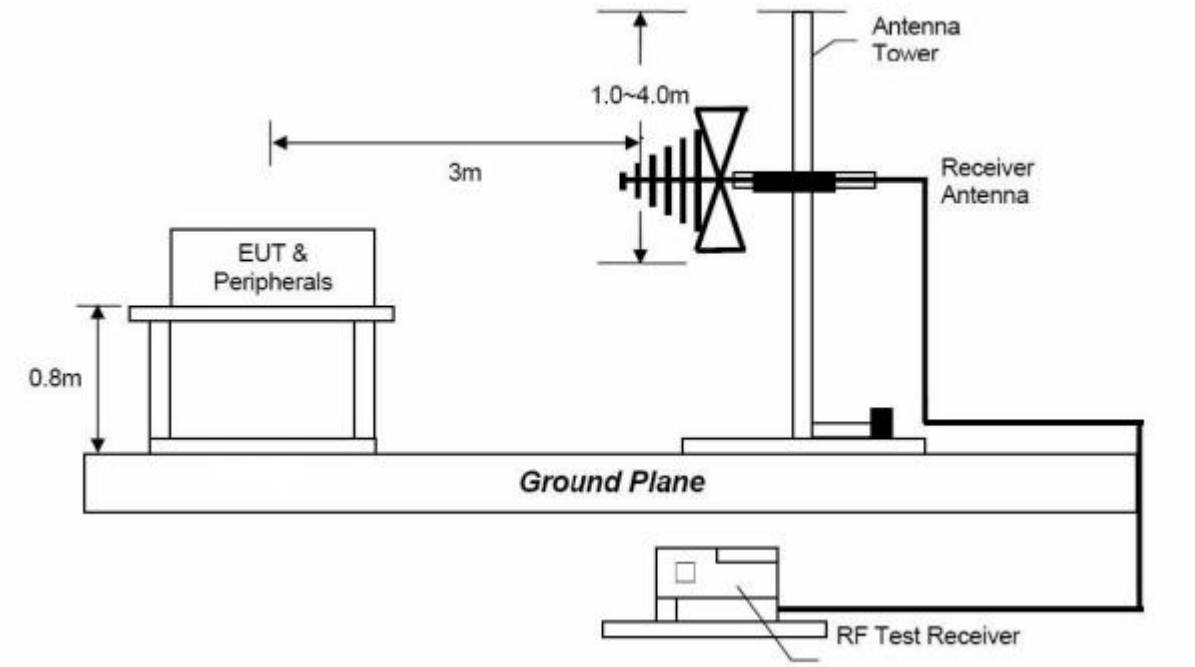

Radiated Emission Test Set-Up, Frequency above 1GHz

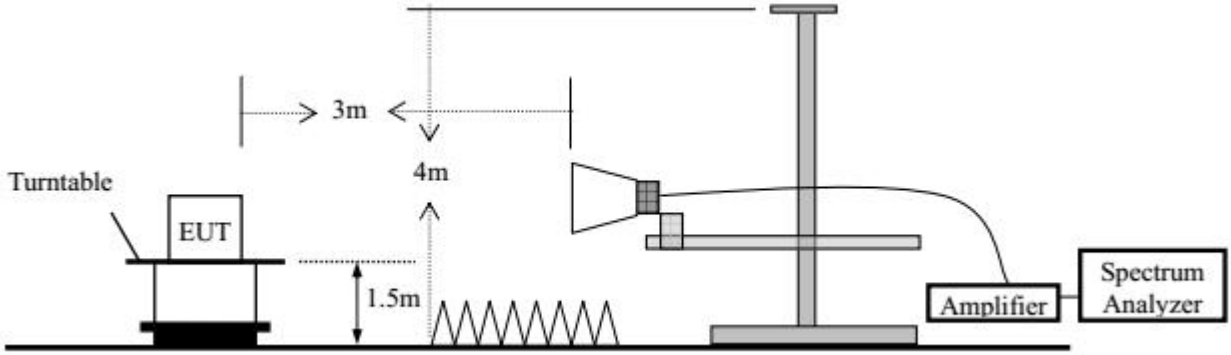

7.4 TEST RESULT AND DATA (9KHZ ~ 30MHZ)

The 9kHz - 30MHz spurious emission is under limit 20dB more.

7.5 TEST RESULT AND DATA (30MHZ ~ 1GHZ, WORST EMISSIONS FOUND)

M/N :	RL-2R3930B	Test Voltage:	DC 4.5V
Test Date :	Mar.23, 2020	Relative Humidity:	54%
Test by:	Bing	Temperature:	20℃
Test Mode:	Working	Pressure:	101.0KPa

Freq (MHz)	Ant.Pol (H/V)	Reading Level (dBuV)	Factor (dB/m)	Emission Level (dBuV/m)	Limit 3m (dBuV/m)	Margin (dB)	Note
73.5	V	18.36	12.10	30.46	40.00	-9.54	QP
132.06	V	19.26	14.37	33.63	43.50	-9.87	QP
178.21	V	20.36	15.97	36.33	43.50	-7.17	QP
211.36	V	17.26	16.78	34.04	43.50	-9.46	QP
560.35	V	15.20	18.37	33.57	46.50	-12.93	QP
783.26	V	17.30	20.26	37.56	46.50	-8.94	QP

36.91	H	18.73	13.26	31.99	40.00	-8.01	QP
123.26	H	20.36	18.36	38.72	43.50	-4.78	QP
437.5	H	18.64	18.12	36.76	46.50	-9.74	QP
513.21	H	18.03	18.60	36.63	46.50	-6.87	QP
635.36	H	16.49	18.96	35.45	46.50	-11.05	QP
733.43	H	16.61	19.64	36.25	46.50	-10.25	QP

7.6 FOR FUNDAMENTAL RADIATION, HARMONIC RADIATION.

M/N :	RL-2R3930B	Test Voltage:	DC 4.5V
Test Date :	Mar.23, 2020	Relative Humidity:	54%
Test by:	Baret	Temperature:	20℃
Test Mode:	TX	Pressure:	101.0KPa

Freq (MHz)	Ant.Pol (H/V)	Reading Level (dBuV)	Factor (dB/m)	Emission Level (dBuV/m)	Limit 3m (dBuV/m)	Margin (dB)	Note
433.92	V	56.23	17.69	73.92	108.82	-34.90	Peak
867.83	V	29.26	19.88	49.14	80.82	-31.68	Peak

433.92	H	45.23	17.69	62.89	108.82	-45.93	Peak
867.83	H	27.36	19.88	47.24	80.82	-33.58	Peak

7.7 TEST RESULT AND DATA (ABOVE 1GHZ)

M/N :	RL-2R3930B	Test Voltage:	DC 4.5V
Test Date :	Mar.23, 2020	Phase:	Vertical
Temperature:	20℃	Relative Humidity:	54%
Pressure:	101.0KPa	Test by:	Bing
Test Mode:	Working		

Freq (MHz)	Ant.Pol (H/V)	Reading Level (dBuV)	Factor (dB/m)	Emission Level (dBuV)		Limit 3m (dBuV)		Margin (dB)	
		PK		PK	AV	PK	AV	PK	AV
1312.36	V	38.65	14.54	53.19	49.49	74.00	54.00	-20.81	-4.51
1732.36	V	39.46	15.23	54.69	50.99	80.82	60.82	-26.13	-9.83

1312.36	H	39.21	14.21	53.42	49.72	74.00	54.00	-20.58	-4.28
1732.36	H	41.56	14.55	56.11	52.41	80.82	60.82	-24.71	-8.41

Note:

(1) All Readings are Peak Value and AV.
(2) Emission Level= Reading Level + Factor
(3) Factor= Antenna Gain + Cable Loss – Amplifier Gain
(4) Data of measurement within this frequency range shown " ---" in the table above means the reading of emissions are attenuated more than 10dBbelow the permissible limits.

Average should be determined by duty cycle factor.

The duty cycle is simply the on time by divided by the period:

The duration of one cycle = 67.40ms <100ms

Effective period of the cycle =

Duty cycle =0.6533ms

AV Factor=20log0.6533= -3.70

The value of Average= The value of Peak+AV Factor.

Example: For 433.92MHz, AV=73.92 (Peak)-3.7(AV factor)=70.22

Details please see the fifth chapter following plots.

8. DUTY CYCLE

8.1 TEST LIMIT

No dedicated limit specified in the Rules.

8.2 TEST PROCEDURES

a. Place the EUT on the table and set it in transmitting mode.
b.Remove the antenna from the EUT and then connect a low loss RF cable from the antenna port to the spectrum analyzer.
c.Set centre frequency of spectrum analyzer=operating frequency.
d.Set the spectrum analyzer as RBW=100kHz, VBW=100KHz, Span=0Hz, Adjust Sweep=100ms to obtain the “worst-case” pulse on timeRepeat above procedures until all frequency measured was complete.

8.3 TEST SETUP LAYOUT

8.4 TEST RESULT AND DATA

PASS

Duty Cycle = Ton / Tp * 100% = (0.4524*9+1.404*15+1*14.69)/ 60.95=0.6533

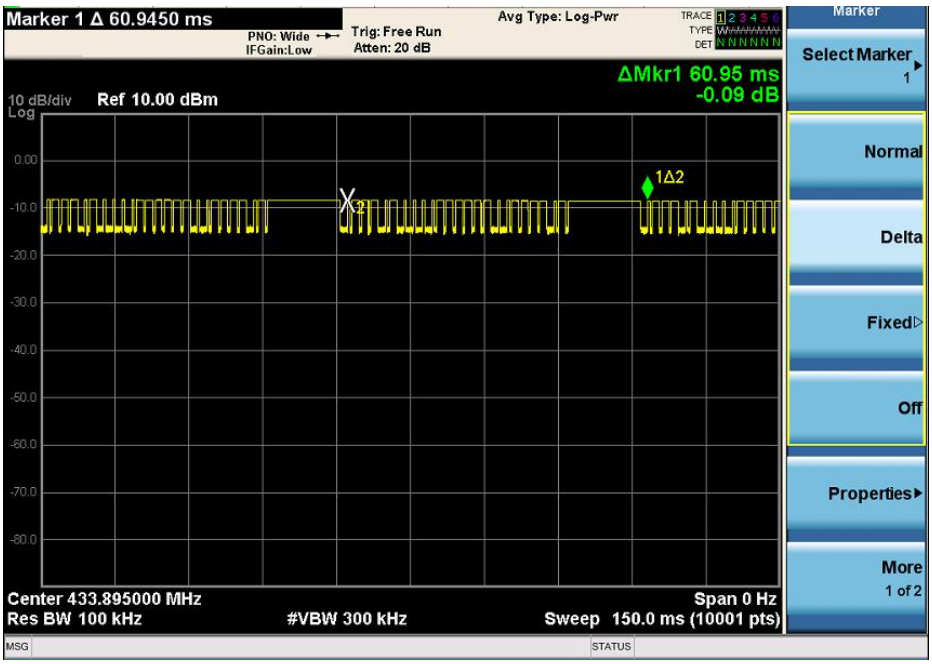
Marker 1 Δ 60.9450 ms
PNO: Wide
IFGain:Low
Trig: Free Run
Atten: 20 dB
Avg Type: Log-Pwr
ΔMkr1 60.95 ms
-0.09 dB
10 dB/div
Ref 10.00 dBm
Log
1Δ2
Center 433.895000 MHz
Res BW 100 kHz
#VBW 300 kHz
Span 0 Hz
Sweep 150.0 ms (10001 pts)
Marker
Select Marker
Normal
Delta
Fixed
Off
Properties
More
1 of 2
MSG
STATUS

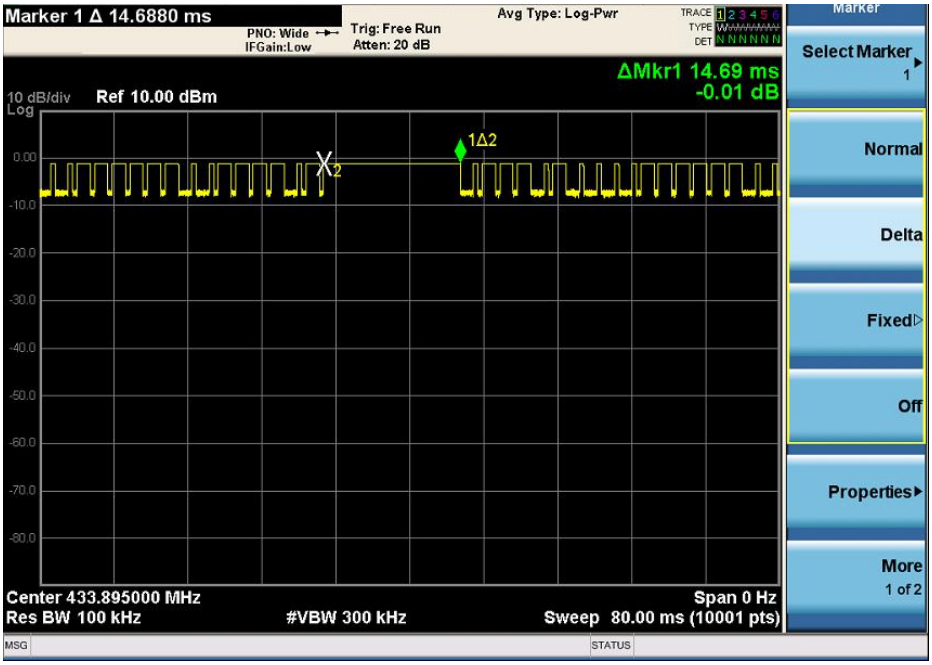
Marker 1 Δ 14.6880 ms
PNO: Wide
IFGain:Low
Trig: Free Run
Atten: 20 dB
Avg Type: Log-Pwr
ΔMkr1 14.69 ms
-0.01 dB
10 dB/div
Ref 10.00 dBm
Log
1Δ2
Center 433.895000 MHz
Res BW 100 kHz
#VBW 300 kHz
Span 0 Hz
Sweep 80.00 ms (10001 pts)
Marker
Select Marker
Normal
Delta
Fixed
Off
Properties
More
1 of 2
MSG
STATUS

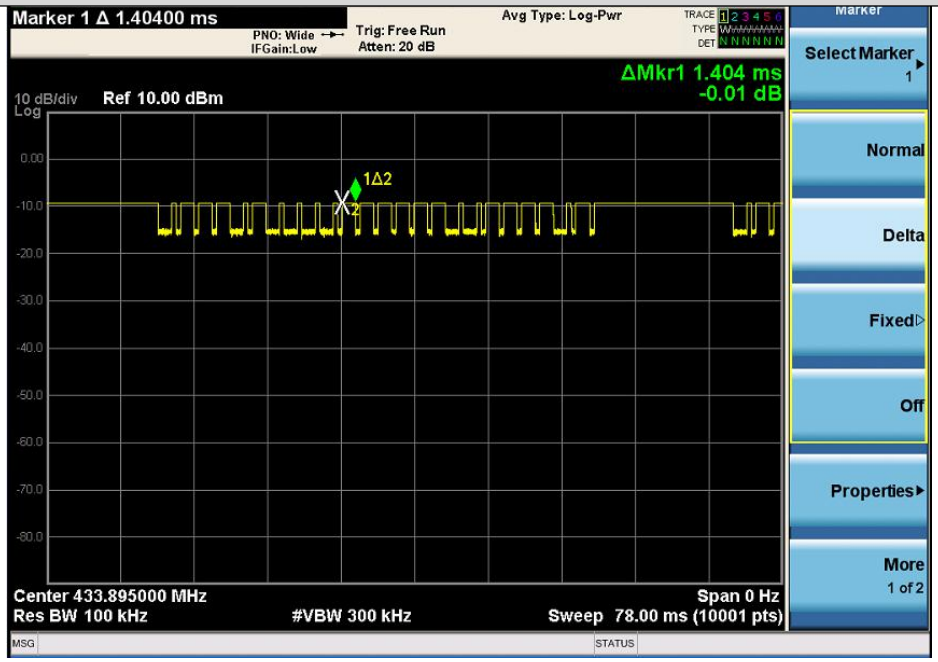
Marker 1 Δ 1.40400 ms
PNO: Wide
IFGain:Low
Trig: Free Run
Atten: 20 dB
Avg Type: Log-Pwr
ΔMkr1 1.404 ms
-0.01 dB
10 dB/div
Ref 10.00 dBm
Log
1Δ2
Center 433.895000 MHz
Res BW 100 kHz
#VBW 300 kHz
Span 0 Hz
Sweep 78.00 ms (10001 pts)
Marker
Select Marker
Normal
Delta
Fixed
Off
Properties
More
1 of 2

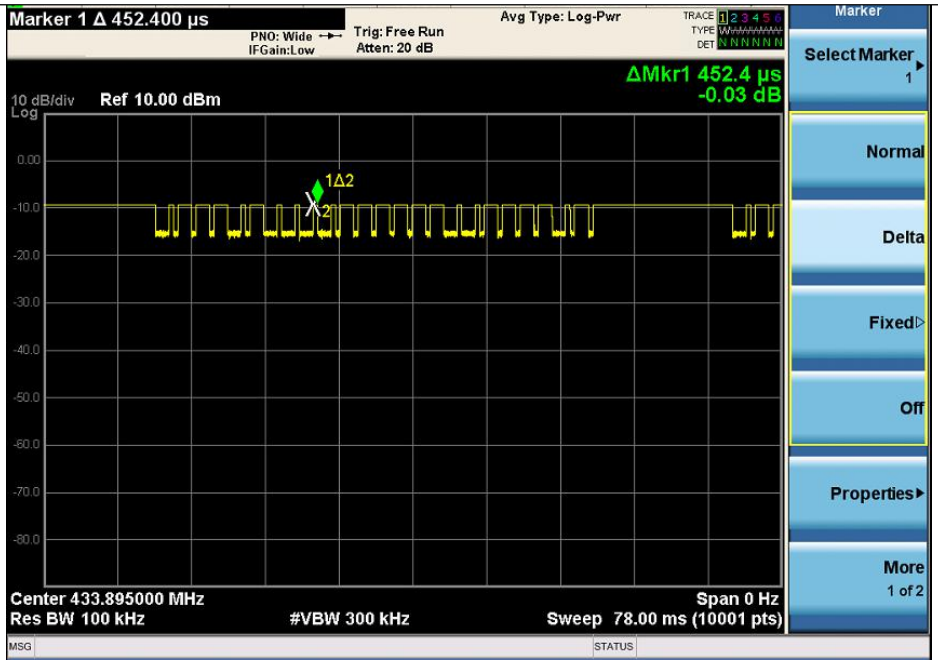
Marker 1 Δ 452.400 µs
PNO: Wide
IFGain:Low
Trig: Free Run
Atten: 20 dB
Avg Type: Log-Pwr
ΔMkr1 452.4 µs
-0.03 dB
10 dB/div
Ref 10.00 dBm
Log
1Δ2
Center 433.895000 MHz
Res BW 100 kHz
#VBW 300 kHz
Span 0 Hz
Sweep 78.00 ms (10001 pts)
Marker
Select Marker
Normal
Delta
Fixed
Off
Properties
More
1 of 2

9. 20DB BANDWIDTH

FCC 15.231 (c)

9.1 TEST LIMIT

The bandwidth of the emission shall be no wider than 0.25% of the center frequency for devices operating above 70 MHz and below 900 MHz. Bandwidth is determined at the points 20 dB down from the modulated carrier.

9.2 TEST PROCEDURES

a. With the EUT antenna attached, the EUT 20dB & 99% Occupied Bandwidth power was received by the test antenna which was connected to the spectrum analyzer with the START and STOP frequencies set to the EUT operation band.

9.3 TEST SETUP LAYOUT

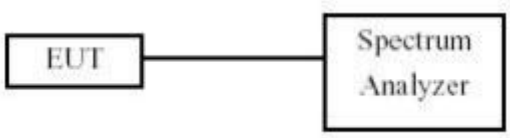

9.4 TEST RESULT AND DATA

PASS
Please refer to following table.

Temperature :	22 ℃	Humidity:	56%	Pressure:	101.45KPa
Test By:		Bing	Test Date :	Mar. 23, 2020	

Frequency MHz	20dB Bandwidth (KHz)	99 % Occupied Bandwidth (KHz)	Limit (KHz)
433.92MHz	386.96	37.709	1084.8

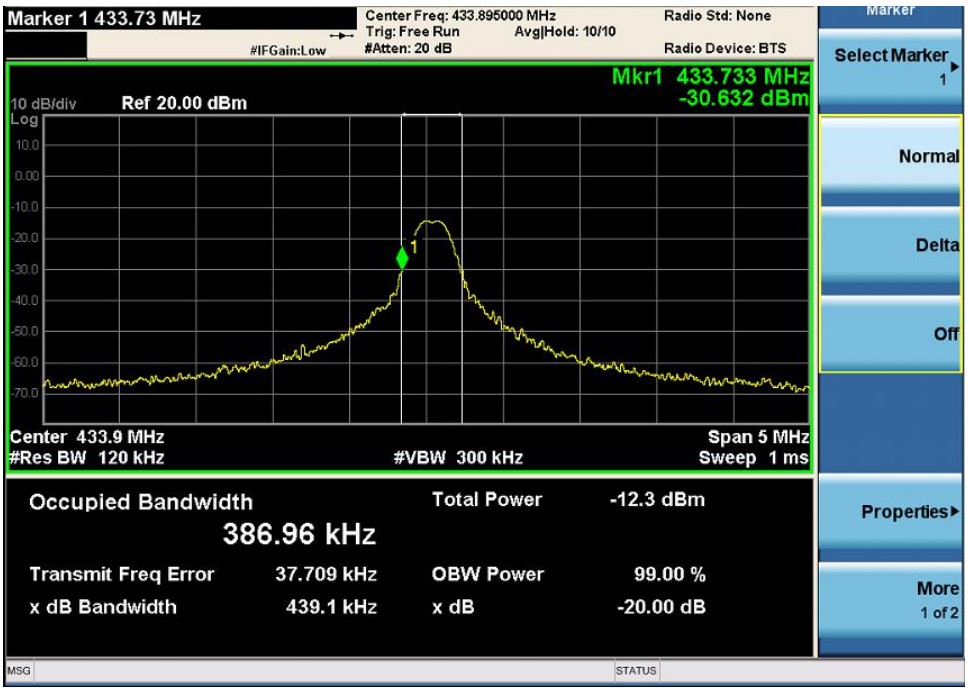
Marker 1 433.73 MHz
Center Freq: 433.895000 MHz
Trig: Free Run
Avg|Hold: 10/10
#Atten: 20 dB
#IFGain:Low
Radio Std: None
Radio Device: BTS
Mkr1 433.733 MHz
-30.632 dBm
10 dB/div
Ref 20.00 dBm
Log
10.0
0.00
-10.0
-20.0
-30.0
-40.0
-50.0
-60.0
-70.0
Center 433.9 MHz
#Res BW 120 kHz
#VBW 300 kHz
Span 5 MHz
Sweep 1 ms
Occupied Bandwidth
386.96 kHz
Total Power -12.3 dBm
Transmit Freq Error 37.709 kHz
OBW Power 99.00 %
x dB Bandwidth 439.1 kHz
x dB -20.00 dB
MSG
STATUS
Marker
Select Marker 1
Normal
Delta
Off
Properties
More 1 of 2

10. TRANSMISSION CEASE TIME

FCC 15.231 (a)

10.1 TEST LIMIT

A manually operated transmitter shall employ a switch that will automatically deactivate the transmitter within not more than 5 seconds of being released.

10.2 TEST PROCEDURES

a. Maximizing procedure was performed on the highest emissions to ensure that The EUT complied with all installation combinations. The antenna was all opened.

10.3 TEST SETUP LAYOUT

10.4 TEST RESULT AND DATA

PASS

Please refer to following table.

Temperature :	22 ℃	Humidity:	56%	Pressure:	101.45KPa
Test By:		Bing	Test Date :	Mar. 24, 2020	

Frequency MHz	Transmission Cease Time	Limit	Result
433.92	2.2s	5s	Pass

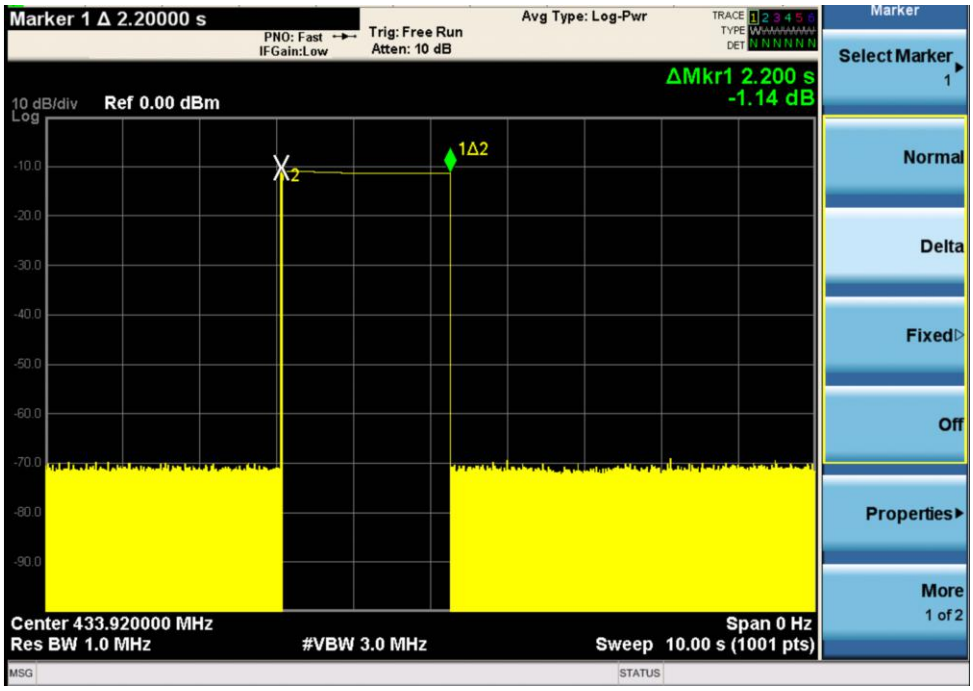

11. RESTRICTED BANDS OF OPERATION

Only spurious emissions are permitted in any of the frequency bands listed below:

MHz	MHz	MHz	GHz
0.09000 – 0.11000	16.42000 – 16.42300	399.9 – 410.0	4.500 – 5.150
0.49500 – 0.505**	16.69475 – 16.69525	608.0 – 614.0	5.350 – 5.460
2.17350 – 2.19050	16.80425 – 16.80475	960.0 – 1240.0	7.250 – 7.750
4.12500 – 4.12800	25.50000 – 25.67000	1300.0 – 1427.0	8.025 – 8.500
4.17725 – 4.17775	37.50000 – 38.25000	1435.0 – 1626.5	9.000 – 9.200
4.20725 – 4.20775	73.00000 – 74.60000	1645.5 – 1646.5	9.300 – 9.500
6.21500 – 6.21800	74.80000 – 75.20000	1660.0 – 1710.0	10.600 – 12.700
6.26775 – 6.26825	108.00000 – 121.94000	1718.8 – 1722.2	13.250 – 13.400
6.31175 – 6.31225	123.00000 – 138.00000	2200.0 – 2300.0	14.470 – 14.500
8.29100 – 8.29400	149.90000 – 150.05000	2310.0 – 2390.0	15.350 – 16.200
8.36200 – 8.36600	156.52475 – 156.52525	2483.5 – 2500.0	17.700 – 21.400
8.37625 – 8.38675	156.70000 – 156.90000	2655.0 – 2900.0	22.010 – 23.120
8.41425 – 8.41475	162.01250 – 167.17000	3260.0 – 3267.0	23.600 – 24.000
12.29000 – 12.29300	167.72000 – 173.20000	3332.0 – 3339.0	31.200 – 31.800
12.51975 – 12.52025	240.00000 – 285.00000	3345.8 – 3358.0	36.430 – 36.500
12.57675 – 12.57725	322.00000 – 335.40000	3600.0 – 4400.0	Above 38.6
13.36000 – 13.41000			

**: Until February 1, 1999, this restricted band shall be 0.490-0.510 MHz

11.1 LABELING REQUIREMENT

The device shall bear the following statement in a conspicuous location on the device: This device complies with part 15 of the FCC Rules. Operation is subject to the following two conditions: (1) This device may not cause harmful interference, and (2) this device must accept any interference received, including interference that may cause undesired operation.

--END---