DEWALT
Label Placement

GENERAL INSTRUCTIONS:

SUPPLIER TO INSURE CORRECT REVISION LEVEL DWG FOR PRODUCTION. CONTACT SB&D PURCHASING DEPT. FOR LATEST REVISION LEVEL DWG.

CONTACT SB&D GRAPHICS DESIGN FOR ORIGINAL ARTWORK, COLOR STANDARDS AND CORPORATE GUIDELINES.

PROOFS OF ALL REVISIONS THAT AFFECT ARTWORK AND ALL NEW COLOR FORMULATIONS MUST BE SUBMITTED TO SB&D GRAPHICS DESIGN FOR APPROVAL PRIOR TO MAKING PRODUCTION PARTS. SEE EP-1006.

SUPPLIER TO PROVIDE SB&D GRAPHICS DESIGN WITH 6 SAMPLES OF ALL PRODUCTION PARTS. MARK B&D PART NO. AND REVISION LEVEL.

COLOR VARIATIONS:

= PMS Black

= DEWALT Yellow

LABEL APPLICATION

☐ TEXTURED ■ NON-TEXTURED	■ RULED (one curve) ☐ FLAT ☐ COMPOUND	☐ OUTDOOR USE ■ INDOOR USE

ADHESION: ■ PERMANENT ☐ REMOVEABLE ☐ OTHER

SYNTHETIC LABEL CONSTRUCTION:

SUPPLIER NAME:	LABEL MATERIAL:
TBD	5 MIL MATTE POLYCARBONATE, SUB-SURFACED PRINTED, 2 MIL ACRYLIC ADHESIVE MATTE TEXTURED

SPECIAL NOTES:

1. FINISHED LABEL MUST BE A "UL" AND "CSA" RECOGNIZED LABELING SYSTEM (UL STANDARD: UL969, UL CATEGORY CODE: PGDQ2; CSA STANDARD: C22.2 NO. 0.15, CSA CLASS: 7921) AND APPROVED FOR THE SURFACE THAT THE LABEL WILL BE APPLIED TO UNLESS STANLEY BLACK & DECKER AGREES TO A DEVIATION.
2. LABEL MANUFACTURER IS RESPONSIBLE TO PLACE THEIR MANUFACTURER'S CODE ON LABEL. IN THE SIZE AND LOCATION INDICATED ON THIS DOCUMENT.
3. INK USED MUST BE UV STABILIZED.
4. ALL MATERIALS MUST COMPLY WITH ES100118.
5. LABELS SHALL BE LEGIBLE, SHALL NOT WORK LOOSE, AND SHALL NOT BECOME CURLED AT THE EDGES AFTER BEING RUBBED BY HAND FOR 15 SECONDS WITH A CLOTH SOAKED IN WATER AND AGAIN FOR 15 SECONDS WITH A CLOTH SOAKED IN PETROLEUM SPIRIT. THE PETROLEUM SPIRIT TO BE USED FOR THE TEST SHALL BE A REAGENT GRADE HEXANE WITH A MINIMUM OF 85% AS N-HEXANE.
6. LABEL CONSTRUCTION: WILL MEET THE DURABILITY REQUIREMENTS AND ALSO PROVIDES THE VISUAL CONSISTENCY WITH OTHER DEWALT BRAND PRODUCTS.
7. LABEL MUST SATISFY LUBRICATING OIL IMMERSION TEST PER UL969 OR CSA C22.2 # 0.15
8. LABEL MUST SATISFY 80C MAX TEMPERATURE RATING PER UL969 OR CSA C22.2 #0.15.
9. LABEL MUST BE APPROVED FOR NON-DRY INDOOR USE PER UL969 AND CSA C22.2 NO. 0.15
10. ALL SHIPPING BOXES AND ROLL CORES OR LABEL SHEETS MUST BE MARKED WITH VENDOR'S NAME, TRADE NAME, DATE OF MANUFACTURE AND MATERIAL IDENTIFICATION.

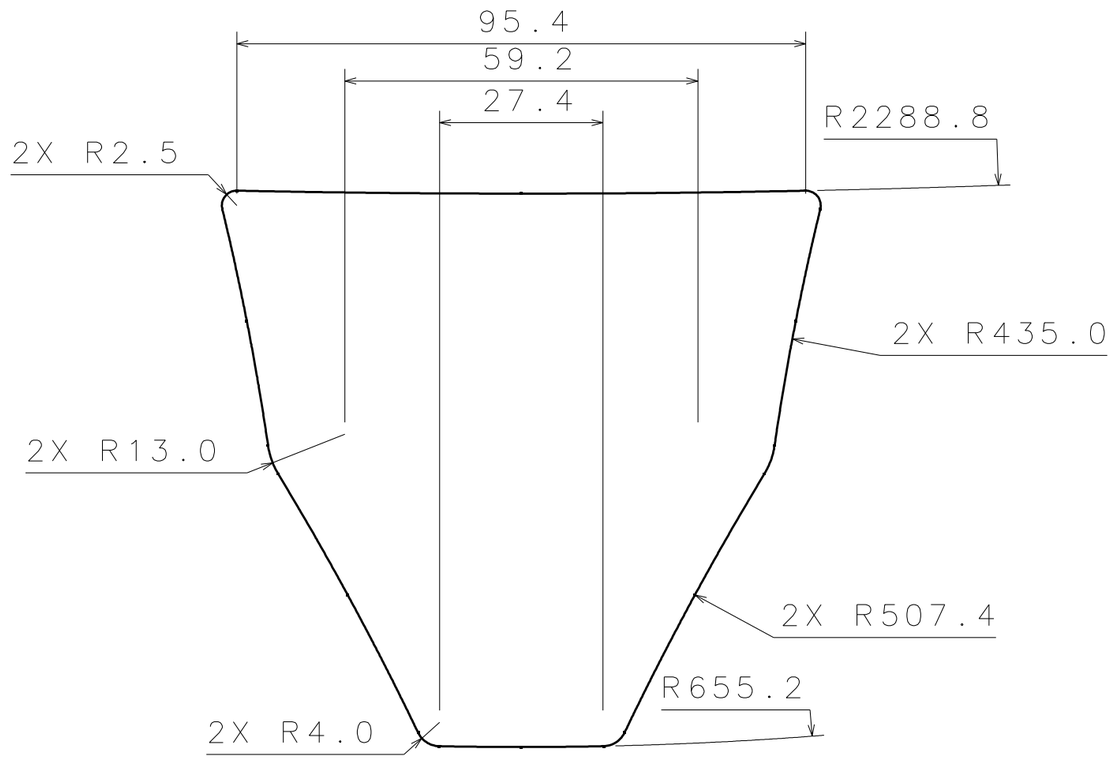

WHEN SERVICING, USE ONLY IDENTICAL REPLACEMENT PARTS.
CUANDO REALICE MANTENIMIENTO O REPARACIONES, USE SÓLO REPUESTOS ORIGINALES.
LORS DE L'ENTRETIEN, UTILISER EXCLUSIVEMENT DES PIÈCES DE RECHANGE IDENTIQUES.

THIS DEVICE COMPLIES WITH PART 15 OF THE FCC RULES AND INDUSTRY CANADA LICENSE-EXEMPT RSS STANDARD(S). OPERATION IS SUBJECT TO THE FOLLOWING TWO CONDITIONS: 1.) THIS DEVICE MAY NOT CAUSE HARMFUL INTERFERENCE AND 2.) THIS DEVICE MUST ACCEPT ANY INTERFERENCE RECEIVED INCLUDING INTERFERENCE THAT MAY CAUSE UNDESIRED OPERATION.

ESTE APARATO CUMPLE CON LA SECCIÓN 15 DE LAS NORMAS FCC DE LOS ESTÁNDARES EXENTOS DE LA LICENCIA RSS DE CANADÁ DE LA INDUSTRIA. LA OPERACIÓN DEL PRODUCTO ESTÁ SUJETO A LAS DOS CONDICIONES SIGUIENTES: 1) ESTE APARATO NO PODRÁ OCASIONAR INTERFERENCIA PERJUDICIAL Y 2) ESTE APARATO DEBERÁ ACEPTAR CUALQUIER INTERFERENCIA RECIBIDA, INCLUYENDO LA INTERFERENCIA QUE PUDIERA OCASIONAR FUNCIONAMIENTO INDESEABLE.

E DISPOSITIF EST CONFORME À LA SECTION 15 DES NORMES DE L'ORGANISME AMÉRICAIN FCC SON FONCTIONNEMENT ET DES NORMES EXEMPTES DU PERMIS RSS DU CANADA D'INDUSTRIE. SON FONCTIONNEMENT RESPECTE LES DEUX CONDITIONS SUIVANTES : 1) LE DISPOSITIF NE PEUT CAUSER AUCUNE INTERFERENCE NUISIBLE, ET 2) LE DISPOSITIF PEUT ACCEPTER TOUTE INTERFERENCE REÇUE, Y COMPRIS DES INTERFERENCES QUI POURRAIENT EN ALTÉRER LE FONCTIONNEMENT.

MODEL: DCL070
FCC ID: YJ7-DCL070
IC: 9082A-DCL070

CAN ICES-3(B)/NMB-3(B)

DEWALT INDUSTRIAL TOOL CO.,
TOWSON, MD 21286 U.S.A.
FOR SERVICE INFORMATION,
CALL 1-800-4-DEWALT
www.DEWALT.com

MADE IN CHINA

N4XXXXX

THIS DOCUMENT IS THE PROPERTY OF STANLEY BLACK & DECKER INC.

THE CONTENTS OF THIS DOCUMENT ARE CONFIDENTIAL AND CONSTITUTE TRADE SECRETS PROPRIETARY TO STANLEY BLACK & DECKER INC.

NEITHER THIS DOCUMENT NOR ITS' CONTENTS SHALL BE DISCLOSED TO ANY UNAUTHORIZED PERSON, COPIED OR PUBLISHED WITHOUT PRIOR WRITTEN CONSENT OF STANLEY BLACK & DECKER INC.

COPYRIGHT © 2016
STANLEY BLACK & DECKER INC.

TOL UNLESS SPECIFIED
0 & 1 PLC DEC: ± 0.4
ANGLES: ± 1°
ALL DIMENSIONS mm

SIZE:

SHEET: 1 of 1

StanleyBlack&Decker

FOR ITEM DATA SEE PRINTED REPORT

GENERAL INSTRUCTIONS:

SUPPLIER TO INSURE CORRECT REVISION LEVEL DWG FOR PRODUCTION. CONTACT SB&D PURCHASING DEPT. FOR LATEST REVISION LEVEL DWG.

CONTACT SB&D GRAPHICS DESIGN FOR ORIGINAL ARTWORK, COLOR STANDARDS AND CORPORATE GUIDELINES.

PROOFS OF ALL REVISIONS THAT AFFECT ARTWORK AND ALL NEW COLOR FORMULATIONS MUST BE SUBMITTED TO SB&D GRAPHICS DESIGN FOR APPROVAL PRIOR TO MAKING PRODUCTION PARTS. SEE EP-1006.

SUPPLIER TO PROVIDE SB&D GRAPHICS DESIGN WITH 6 SAMPLES OF ALL PRODUCTION PARTS. MARK B&D PART NO. AND REVISION LEVEL.

COLOR VARIATIONS:

- ■ = PMS Black
- ■ = DEWALT Yellow
- ■ = ANSI Orange (or PMS 172)

LABEL APPLICATION

☐ TEXTURED ■ NON-TEXTURED	■ RULED (one curve) ☐ FLAT ☐ COMPOUND	☐ OUTDOOR USE ■ INDOOR USE

ADHESION: ■ PERMANENT ☐ REMOVEABLE ☐ OTHER

SYNTHETIC LABEL CONSTRUCTION:

SUPPLIER NAME:	LABEL MATERIAL:
TBD	5 MIL MATTE POLYCARBONATE, SUB-SURFACED PRINTED, 2 MIL ACRYLIC ADHESIVE MATTE TEXTURED

SPECIAL NOTES:

1. SERIAL NO'S TO BE SUB-SURFACE PRINTED. 4 DIGITS MIN. (START WITH 1001). RANDOM ORDER ACCEPTABLE. NO TWO NAMEPLATES TO HAVE IDENTICAL NO'S. SEQUENCE TO BE ASSIGNED BY SB&D PURCHASING DEPT. (APPLICABLE TO DEWALT PRODUCT ONLY.)
2. FINISHED LABEL MUST BE A "UL" AND "CSA" RECOGNIZED LABELING SYSTEM (UL STANDARD: UL969, UL CATEGORY CODE: PGDQ2; CSA STANDARD: C22.2 NO. 0.15, CSA CLASS: 7921) AND APPROVED FOR THE SURFACE THAT THE LABEL WILL BE APPLIED TO UNLESS STANLEY BLACK & DECKER AGREES TO A DEVIATION.
3. LABEL MANUFACTURER IS RESPONSIBLE TO PLACE THEIR MANUFACTURER'S CODE ON LABEL. IN THE SIZE AND LOCATION INDICATED ON THIS DOCUMENT.
4. INK USED MUST BE UV STABILIZED.
5. ALL MATERIALS MUST COMPLY WITH ES100118.
6. LABELS SHALL BE LEGIBLE, SHALL NOT WORK LOOSE, AND SHALL NOT BECOME CURLED AT THE EDGES AFTER BEING RUBBED BY HAND FOR 15 SECONDS WITH A CLOTH SOAKED IN WATER AND AGAIN FOR 15 SECONDS WITH A CLOTH SOAKED IN PETROLEUM SPIRIT. THE PETROLEUM SPIRIT TO BE USED FOR THE TEST SHALL BE A REAGENT GRADE HEXANE WITH A MINIMUM OF 85% AS N-HEXANE.
7. LABEL CONSTRUCTION: WILL MEET THE DURABILITY REQUIREMENTS AND ALSO PROVIDES THE VISUAL CONSISTENCY WITH OTHER DEWALT BRAND PRODUCTS.
8. LABEL MUST SATISFY LUBRICATING OIL IMMERSION TEST PER UL969 OR CSA C22.2 # 0.15
9. LABEL MUST SATISFY 80C MAX TEMPERATURE RATING PER UL969 OR CSA C22.2 #0.15.
10. LABEL MUST BE APPROVED FOR NON-DRY INDOOR USE PER PGDQ2.
11. ALL SHIPPING BOXES AND ROLL CORES OR LABEL SHEETS MUST BE MARKED WITH VENDOR'S NAME, TRADE NAME, DATE OF MANUFACTURE AND MATERIAL IDENTIFICATION.

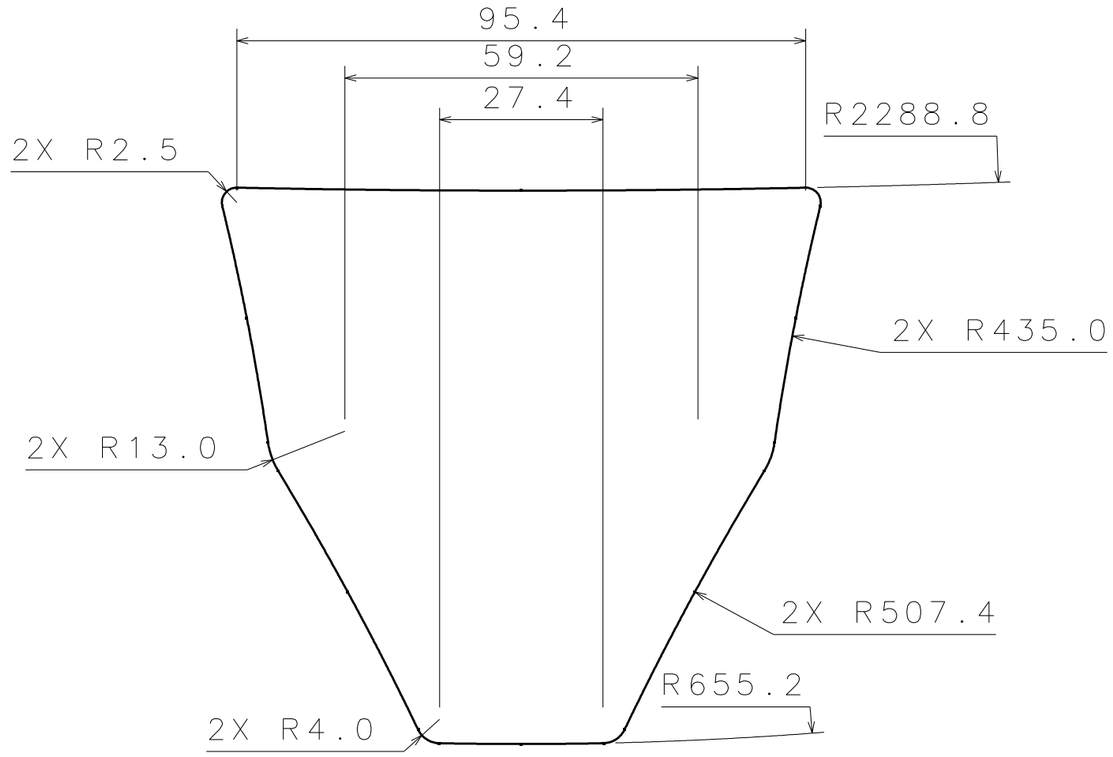

DCL070 CORDED / CORDLESS BLUETOOTH LED LARGE AREA LIGHT WITH BUILT-IN BATTERY CHARGER

NOM NYCE c UL us LISTED 406A BC

TYPE 1 INPUT: 120V AC ∼ 60 Hz 2 AMPS / 20V DC ⎓
OUTPUT: 2 AMPS 20V DC ⎓ CLASS 2 CHARGER OUTPUT 10 AMPS 120V AC ∼ OUTLET
CHARGE ONLY WHEN THE BATTERY IS ABOVE 40°F (4°C). BFP

⚠WARNING TO REDUCE THE RISK OF INJURY, USER MUST READ INSTRUCTION MANUAL. USE WITH DEWALT BATTERY. OTHERS MAY BURST CAUSING PERSONAL INJURY AND DAMAGE. DO NOT OPEN. FOR COMMERCIAL AND HOUSEHOLD USE. DO NOT EXPOSE TO RAIN, STORE INDOORS. OUTDOOR USE. RISK OF ELECTRIC SHOCK - KEEP EXTENSION CORD CONNECTION DRY AND OFF THE GROUND. CONNECT ONLY TO PROPERLY GROUNDED OUTLETS. WHEN USING SCHEDULER, ENSURE ILLUMINATED AREA IS FREE OF PERSONNEL BEFORE SCHEDULED TURN OFF.

⚠ADVERTENCIA/AVERTISSEMENT PARA REDUCIR EL RIESGO DE LESIONES, EL USUARIO DEBERÁ LEER EL MANUAL DE INSTRUCCIONES, UTILIZAR CON UNA BATERÍA DEWALT. OTRAS BATERÍAS PODRÍAN ESTALLAR Y PRODUCIR LESIONES CORPORALES Y DAÑOS. NO ABRIR. PARA USO COMERCIAL Y DOMÉSTICO. NO EXPONER A LA LLUVIA. ALMACENAR BAJO TECHO. USO EN EXTERIORES. RIESGO DE DESCARGA ELÉCTRICA – MANTENER LA CONEXIÓN DEL ALARGADOR SECA Y NO DEJARLA EN EL SUELO. CONECTAR SOLO A TOMAS DE CORRIENTE CON CONEXIÓN A TIERRA APROPIADA. AL UTILIZAR EL PROGRAMADOR, ASEGÚRESE DE QUE NO HAYA PERSONAL EN EL ÁREA ILUMINADA ANTES DEL APAGADO PROGRAMADO. / À TITRE PRÉVENTIF, LIRE LE GUIDE. UTILISER AVEC UN BLOC-PILE DEWALT. D'AUTRES TYPES POURRAIENT EXPLOSER ET CAUSER DES DOMMAGES CORPORELS ET MATÉRIELS. NE PAS OUVRIR. POUR LE COMMERCIAL ET PLUIE, ENREGISTRENT À L'INTÉRIEUR. UTILISATION EXTÉRIEURE. RISQUES DE CHOCS ÉLECTRIQUES - MAINTENEZ LA CONNEXION DE CORDE D'EXTENSION SÈCHE ET OUTRE DE LA TERRE. À BRANCHER UNIQUEMENT SUR UNE PRISE CORRECTEMENT MISE À LA TERRE. LORSQUE LE PROGRAMMATEUR EST UTILISÉ, S'ASSURER QUE LA ZONE À ILLUMINER NE COMPORTE PLUS PERSONNE AVANT D'EN PROGRAMMER L'ARRÊT.

N461155

THIS DOCUMENT IS THE PROPERTY OF STANLEY BLACK & DECKER INC.
THE CONTENTS OF THIS DOCUMENT ARE CONFIDENTIAL AND CONSTITUTE TRADE SECRETS PROPRIETARY TO STANLEY BLACK & DECKER INC.
NEITHER THIS DOCUMENT NOR ITS' CONTENTS SHALL BE DISCLOSED TO ANY UNAUTHORIZED PERSON, COPIED OR PUBLISHED WITHOUT PRIOR WRITTEN CONSENT OF STANLEY BLACK & DECKER INC.
COPYRIGHT © 2016 STANLEY BLACK & DECKER INC.

TOL UNLESS SPECIFIED
0 & 1 PLC DEC: ± 0.4
ANGLES: ± 1°
ALL DIMENSIONS mm

SIZE:

SHEET: 1 of 1

StanleyBlack&Decker

FOR ITEM DATA SEE PRINTED REPORT