Fig. S

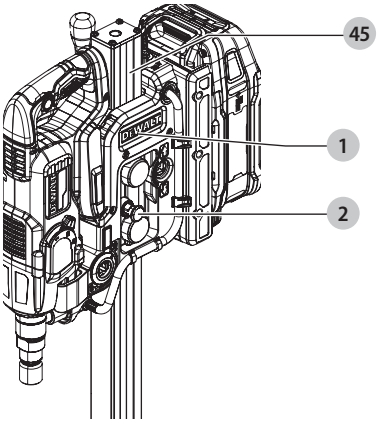

Fig. T

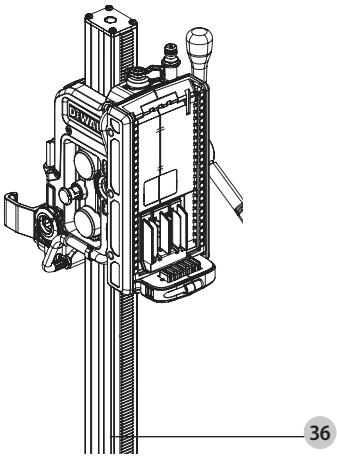

Fig. U

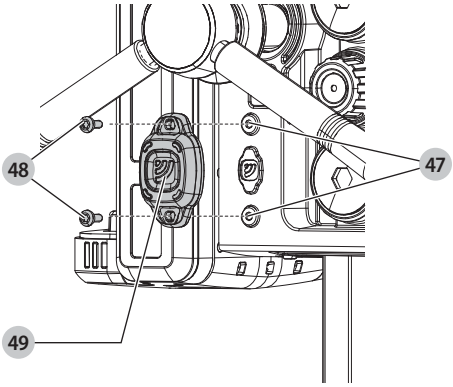

WARNING: Read all safety warnings, instructions, illustrations, and specifications in this manual, including the battery and charger sections provided in an original tool manual or the separate Batteries and Chargers manual. *Manuals can be obtained by contacting Customer Service as described elsewhere in this manual. Failure to follow the warnings and instructions may result in electric shock, fire and/or serious injury.*

Definitions: Safety Alert Symbols and Words

This instruction manual uses the following safety alert symbols and words to alert you to hazardous situations and your risk of personal injury or property damage.

DANGER: *Indicates an imminently hazardous situation which, if not avoided,* ***will*** *result in* ***death or serious injury****.*

WARNING: *Indicates a potentially hazardous situation which, if not avoided,* ***could*** *result in* ***death or serious injury****.*

CAUTION: *Indicates a potentially hazardous situation which, if not avoided,* ***may*** *result in* ***minor or moderate injury****.*

(Used without word) Indicates a safety related message.

NOTICE: *Indicates a practice* ***not related to personal injury*** *which, if not avoided,* ***may*** *result in* ***property damage****.*

Intended Use

Your DCPS151 DEWALT POWERSHIFT® 6.375IN core drill stand has been designed to extend the capabilities of your DEWALT DCD150 60V MAX 3-Speed Core Drill. The stand enables set up in both downward vertical and horizontal applications. Establishing angles ranging from -15° to 45°, the stand can also be used in slope applications.

GENERAL POWER TOOL SAFETY WARNINGS

WARNING: Read all safety warnings, instructions, illustrations and specifications provided with this power tool. *Failure to follow all instructions listed below may result in electric shock, fire and/or serious injury.*

SAVE ALL WARNINGS AND INSTRUCTIONS FOR FUTURE REFERENCE.

The term "power tool" in the warnings refers to your mains-operated (corded) power tool or battery-operated (cordless) power tool.

1) Work Area Safety

a) ***Keep work area clean and well lit.*** *Cluttered or dark areas invite accidents.*

b) ***Do not operate power tools in explosive atmospheres, such as in the presence of flammable liquids, gases or dust.*** *Power tools create sparks which may ignite the dust or fumes.*

c) ***Keep children and bystanders away while operating a power tool.*** *Distractions can cause you to lose control.*

2) Electrical Safety

a) ***Power tool plugs must match the outlet. Never modify the plug in any way. Do not use any adapter plugs with earthed (grounded) power tools.*** *Unmodified plugs and matching outlets will reduce risk of electric shock.*

b) ***Avoid body contact with earthed or grounded surfaces, such as pipes, radiators, ranges and refrigerators.*** *There is an increased risk of electric shock if your body is earthed or grounded.*

c) ***Do not expose power tools to rain or wet conditions.*** *Water entering a power tool will increase the risk of electric shock.*

d) ***Do not abuse the cord. Never use the cord for carrying, pulling or unplugging the power tool. Keep cord away from heat, oil, sharp edges or moving parts.*** *Damaged or entangled cords increase the risk of electric shock.*

e) ***When operating a power tool outdoors, use an extension cord suitable for outdoor use.*** *Use of a cord suitable for outdoor use reduces the risk of electric shock.*

f) ***If operating a power tool in a damp location is unavoidable, use a ground fault circuit interrupter (GFCI) protected supply.*** *Use of a GFCI reduces the risk of electric shock.*

3) Personal Safety

a) ***Stay alert, watch what you are doing and use common sense when operating a power tool. Do not use a power tool while you are tired or under the influence of drugs, alcohol or medication.*** *A moment of inattention while operating power tools may result in serious personal injury.*

b) ***Use personal protective equipment. Always wear eye protection.*** *Protective equipment such as a dust mask, non-skid safety shoes, hard hat, or hearing protection used for appropriate conditions will reduce personal injuries.*

c) ***Prevent unintentional starting. Ensure the switch is in the off position before connecting to power source and/or battery pack, picking up or carrying the tool.*** *Carrying power tools with your finger on the switch or energizing power tools that have the switch on invites accidents.*

d) ***Remove any adjusting key or wrench before turning the power tool on.*** *A wrench or a key left attached to a rotating part of the power tool may result in personal injury.*

e) ***Do not overreach. Keep proper footing and balance at all times.*** *This enables better control of the power tool in unexpected situations.*

f) ***Dress properly. Do not wear loose clothing or jewelry. Keep your hair, clothing and gloves away from moving parts.*** *Loose clothes, jewelry or long hair can be caught in moving parts.*

g) ***If devices are provided for the connection of dust extraction and collection facilities, ensure these are connected and properly used.*** *Use of dust collection can reduce dust-related hazards.*

h) ***Do not let familiarity gained from frequent use of tools allow you to become complacent and ignore tool safety principles.*** *A careless action can cause severe injury within a fraction of a second.*

4) Power Tool Use and Care

a) ***Do not force the power tool. Use the correct power tool for your application.*** *The correct power tool will do the job better and safer at the rate for which it was designed.*

b) ***Do not use the power tool if the switch does not turn it on and off.*** *Any power tool that cannot be controlled with the switch is dangerous and must be repaired.*

c) ***Disconnect the plug from the power source and/or remove the battery pack, if detachable, from the power tool before making any adjustments, changing accessories, or storing power tools.*** *Such preventive safety measures reduce the risk of starting the power tool accidentally.*

d) ***Store idle power tools out of the reach of children and do not allow persons unfamiliar with the power tool or these instructions to operate the power tool.*** *Power tools are dangerous in the hands of untrained users.*

e) ***Maintain power tools and accessories. Check for misalignment or binding of moving parts, breakage of parts and any other condition that may affect the power tool's operation. If damaged, have the power tool repaired before use.*** *Many accidents are caused by poorly maintained power tools.*

f) ***Keep cutting tools sharp and clean.*** *Properly maintained cutting tools with sharp cutting edges are less likely to bind and are easier to control.*

g) ***Use the power tool, accessories and tool bits, etc. in accordance with these instructions, taking into account the working conditions and the work to be performed.*** *Use of the power tool for operations different from those intended could result in a hazardous situation.*

h) ***Keep handles and grasping surfaces dry, clean and free from oil and grease.*** *Slippery handles and grasping surfaces do not allow for safe handling and control of the tool in unexpected situations.*

5) Battery Tool Use and Care

a) ***Recharge only with the charger specified by the manufacturer.*** *A charger that is suitable for one type of battery pack may create a risk of fire when used with another battery pack.*

b) ***Use power tools only with specifically designated battery packs.*** *Use of any other battery packs may create a risk of injury and fire.*

c) ***When battery pack is not in use, keep it away from other metal objects, like paper clips, coins, keys, nails, screws or other small metal objects, that can make a connection from one terminal to another.*** *Shorting the battery terminals together may cause burns or a fire.*

d) ***Under abusive conditions, liquid may be ejected from the battery; avoid contact. If contact accidentally occurs, flush with water. If liquid contacts eyes, additionally seek medical help.*** *Liquid ejected from the battery may cause irritation or burns.*

e) ***Do not use a battery pack or tool that is damaged or modified.*** *Damaged or modified batteries may exhibit unpredictable behavior resulting in fire, explosion or risk of injury.*

f) ***Do not expose a battery pack or tool to fire or excessive temperature.*** *Exposure to fire or temperature above 265 °F (130 °C) may cause explosion.*

g) ***Follow all charging instructions and do not charge the battery pack or tool outside the temperature range specified in the instructions.*** *Charging improperly or at temperatures outside the specified range may damage the battery and increase the risk of fire.*

6) Service

a) ***Have your power tool serviced by a qualified repair person using only identical replacement parts.*** *This will ensure that the safety of the power tool is maintained.*

b) ***Never service damaged battery packs.*** *Service of battery packs should only be performed by the manufacturer or authorized service providers.*

Safety Instructions for All Operations

- ***Wear ear protectors.*** *Exposure to noise can cause hearing loss.*
- ***Use the auxiliary handle(s) supplied with the tool.*** *Loss of control can cause personal injury.*
- ***Brace the tool properly before use.*** *This tool produces a high output torque and without properly bracing the tool during operation, loss of control may occur resulting in personal injury.*
- ***Hold the power tool by insulated gripping surfaces when performing an operation where the cutting accessory may contact hidden wiring or its own cord.*** *Cutting accessory contacting a "live" wire may make exposed metal parts of the tool "live" and could give the operator an electric shock.*

Safety Instructions When Using Long Drill Bits

- ***Never operate at higher speed than the maximum speed rating of the drill bit.*** *At higher speeds, the bit is likely to bend if allowed to rotate freely without contacting the workpiece, resulting in personal injury.*
- ***Always start drilling at low speed and with the bit tip in contact with the workpiece.*** *At higher speeds, the bit is likely to bend if allowed to rotate freely without contacting the workpiece, resulting in personal injury.*
- ***Apply pressure only in direct line with the bit and do not apply excessive pressure.*** *Bits can bend causing breakage or loss of control, resulting in personal injury.*

Diamond Drill Safety Warnings

a) ***When performing drilling that requires the use of water, route the water away from the operator's work area or use a liquid collection device.*** *Such precautionary measures keep the operator's work area dry and reduce the risk of electrical shock.*

b) ***Operate power tool by insulated grasping surfaces, when performing an operation where the cutting accessory may contact hidden wiring or its own cord.*** *Cutting accessory contacting a "live" wire may make exposed metal parts of the power tool "live" and could give the operator an electric shock.*

c) ***Wear hearing protection when diamond drilling.*** *Exposure to noise can cause hearing loss.*

d) ***When the bit is jammed, stop applying downward pressure and turn off the tool.*** *Investigate and take corrective actions to eliminate the cause of the bit jamming.*

e) ***When restarting a diamond drill in the workpiece check that the bit rotates freely before starting.*** *If the bit is jammed, it may not start, may overload the tool, or may cause the diamond drill to release from the workpiece.*

f) ***When securing the drill stand with anchors and fasteners to the workpiece, ensure that the anchoring used is capable of holding and restraining the machine during use.*** *If the workpiece is weak or porous, the anchor may pull out causing the drill stand to release from the workpiece.*

g) ***When securing the drill stand with a vacuum pad to the workpiece, install the pad on a smooth, clean, non-porous surface. Do not secure to laminated surfaces such as tiles and composite coating.*** *If the workpiece is not smooth, flat or well affixed, the pad may pull away from the workpiece.*

h) ***Ensure there is sufficient vacuum before and during drilling.*** *If the vacuum is insufficient, the pad may release from the workpiece.*

*i) **Never perform drilling with the machine secured by the vacuum pad only, except when drilling downwards.** If the vacuum is lost, the pad will release from the workpiece.*

*j) **When drilling through walls or ceilings, ensure to protect persons and the work area on the other side.** The bit may extend through the hole or the core may fall out on the other side.*

*k) **Do not use this tool for overhead drilling with water supply.** Water entering the power tool will increase the risk of electric shock.*

- ***Wear safety goggles or other eye protection.** Drilling operations cause chips to fly. Flying particles can cause permanent eye damage.*
- ***Bits, tools and drilling area get hot during operation.** Wear gloves when touching them.*
- *Use the core drill under constant supervision.*
- *Make sure not to cut through electric mains, gas or water pipes. Use detection systems prior to drilling.*
- *Make sure the cutting accessory is fitted properly.*
- *Check all screws and tighten securely before you use the machine.*
- *When drilling downward, make sure the core can drop safely without injuring someone standing beneath.*
- ***Drilling is only allowed downward, horizontally and overhead (upward). If performing overhead (upward) drilling, water cooling use is NOT PERMITTED.***
- *Inspect the core drill before every use. Do not use the core drill if there are any defectives on the trigger switch or any part of the housing. Have the core drill repaired by an authorized repair agent.*
- *Do not use the core drill in a damp or wet location.*
- *Switch off the core drill immediately if there is any leak of water.*
- *After interrupting the cut, do not switch on until the core bit can rotate freely.*
- *Always trigger off the switch to prevent the core drill from accidentally self-starting.*

***NOTE** this procedure especially after the power supply is interrupted.*

- *Mounting the core drill onto a stand is recommended to increase the user comfort and reduce the risk of injuries.*
- *In case of jammed core bit disconnect the core drill from the power supply, and remove the reason for the jam before turning on the core drill again.*

Dry drilling

- *Dry drilling is suitable for masonry (bricks, CMU).*
- *Always use a suitable dust extractor.*
- *Always use core bits designed for the type of drilling. Wet core bits for wet drilling and dry core bits for dry drilling.*
- *Do not use the core drill handheld with core bits larger than 3.9" (100 mm).*
- *Always mount the core drill on a stand when drilling holes larger than 3.9" (100 mm).*
- *Wear a dust mask when performing dry cuts.*

Wet drilling

- *Wet drilling is suitable for stone and concrete.*
- *Always use a water cooling device.*
- *Always use core bits designed for wet drilling.*
- *The maximum water pressure is 3 bar. Use a pressure relieve valve in case of a higher water pressure.*
- *Use only pure tap water for cooling purposes.*
- *Prevent water from entering the motor or other electrical components.*

Safe Operation for Stationary Stands

- *A machine incorrectly assembled may cause a hazardous situation. Carefully fix the core drill into the drill stand and check that the drill stand holder is secured.*
- *When fixing the stand to the wall using a vacuum device, you also need to secure the stand with an anchor set. Do not fix the stand to a wall using only the vacuum device.*
- *Check the surface where the drill stand shall be fixed. Irregular surface (such as rough surfaces) can significantly reduce the effectiveness of the suction system. When the vacuum base is mounted to the substrate, it may pull off some of the coated or laminated surface while suctioning.*
- *Do not operate the drill if the vacuum pump cannot produce a vacuum of at least -0.65 bar (green zone) on the vacuum base gauge. Do not operate the drill if the gauge needle is in the red zone.*
- *Do not operate the stand with the vacuum device if the vacuum gauge is not operating correctly.*
- *Do not use drill core bits with a diameter greater than 6-3/8" (162 mm) at this application.*

Additional Instructions for Use in Stationary Position

Safety Precautions

- *Hazardous situation due to broken parts. Always check the core bits before using. Never use deformed or damaged drill core bits.*
- *Use of non-recommended cutting tools, can lead to injuries due to the loss of control. Use only core bits which are designed for this tool and consider the minimum and maximum diameter and length of those core bits.*
- *Incorrect clamping and positioning of the core bit may lead to hazardous situations by broken and ejected parts of the drill core bit. Ensure that the drill core bit is assembled and adjusted correctly. Tighten the core bit with sufficient fastening torque.*
- *Always wear suitable protective equipment (PPE) such as:*
- *Hearing protection, to reduce the risk of induced hearing loss*
- *Gloves, when handling core bits or rough material, to reduce injuries by sharp edges*
- *Safety glasses, to prevent injuries by flying particles*
- *Non-slipping footwear, to prevent injuries caused by slippery surfaces*
- *Hazardous situation due to dust production when drilling without water supply. Use a dust extraction device, if any, or at least a dust mask. Follow OSHA guidelines.*

Safety instructions

Observe the safety regulations in the instruction manual of the core drill to be connected to this attachment. Also observe any applicable additional safety rules. Read the following safety instructions before attempting to operate this product.

Keep these instructions in a safe place!

General

1. Keep work area clean. Cluttered areas and benches can cause accidents.
2. Keep children away. Do not let children come into contact with the tool or its attachments. Keep all people away from the work area.

3. Dress properly. Do not wear loose clothing or jewelry. They can be caught in moving parts. Preferably wear rubber gloves and non-slip footwear when working outdoors. Wear protective hair covering to keep long hair out of the way.

4. Wear safety goggles Also use a face or dust mask in case the operations produce dust or flying particles.

5. Beware of maximum sound pressure. Take appropriate measures for the protection of hearing if the sound pressure of 85 dB(A) is exceeded.

6. Stay alert. Watch what you are doing. Use common sense. Do not operate the tool when you are tired.

7. Use appropriate tool. The intended use is laid down in this instruction manual. Do not force small tools or attachments to do the job of a heavy-duty tool. The tool will do the job better and safer at the rate for which it was intended. Warning! The use of any accessory or attachment or performance of any operation with this tool, other than those recommended in this instruction manual may present a risk of personal injury.

8. Have your power tool attachment repaired by an authorized DEWALT repair agent repair of your power tool attachment being a matter of precision and skill, always take it to your DEWALT authorized repair agent.

Additional Safety Information

⚠ ***WARNING:*** *Never modify the power tool or any part of it. Damage or personal injury could result.*

⚠ ***WARNING: ALWAYS*** *use safety glasses. Everyday eyeglasses are NOT safety glasses. Also use face or dust mask if cutting operation is dusty. ALWAYS WEAR CERTIFIED SAFETY EQUIPMENT:*

- *ANSI Z87.1 eye protection (CAN/CSA Z94.3),*
- *ANSI S12.6 (S3.19) hearing protection,*
- *NIOSH/OSHA/MSHA respiratory protection.*

⚠ ***WARNING:*** *Some dust created by power sanding, sawing, grinding, drilling, and other construction activities contains chemicals known to the State of California to cause cancer, birth defects or other reproductive harm. Some examples of these chemicals are:*

- *lead from lead-based paints,*
- *crystalline silica from bricks and cement and other masonry products, and*
- *arsenic and chromium from chemically-treated lumber.*

Your risk from these exposures varies, depending on how often you do this type of work. To reduce your exposure to these chemicals: work in a well ventilated area, and work with approved safety equipment, such as those dust masks that are specially designed to filter out microscopic particles.

- ***Do not stand on the base during tool operation.*** *Fix it with an anchor or vacuum mount.*
- ***Remove the battery pack from the core drill and stand before making any adjustments, changing accessories, or storing it in-between use.***
- ***Wear protective clothing and wash exposed areas with soap and water.*** *Allowing dust to get into your mouth, eyes, or lay on the skin may promote absorption of harmful chemicals. Direct particles away from face and body.*
- ***Use the appropriate water source or dust extractor to remove the vast majority of static and airborne dust.*** *Failure to remove static and airborne dust could contaminate the working environment or pose an increased health risk to the operator and those in close proximity.*
- ***When rig-mounted drilling, fix the stand to the substrate using either an anchor or a vacuum mount.*** *Holding the work by hand or against your body is unstable and may lead to loss of control and injury.*
- ***Air vents often cover moving parts and should be avoided.*** *Loose clothes, jewelry or long hair can be caught in moving parts.*

The label on your tool may include the following symbols. The symbols and their definitions are as follows:

V	volts
Hz	hertz
min	minutes
⎓ or DC	direct current
⏚	Class I Construction (grounded)
. . ./min	per minute
BPM	beats per minute
IPM	impacts per minute
OPM	oscillations per minute
RPM	revolutions per minute
sfpm	surface feet per minute
SPM	strokes per minute
A	amperes
W	watts
Wh	watt hours
Ah	amp hours
∿ or AC	alternating current
≂ or AC/DC	alternating or direct current
⧈	Class II Construction (double insulated)
n_0	no load speed
n	rated speed
PSI	pounds per square inch
⏚	earthing terminal
⚠	safety alert symbol
	visible radiation– do not stare into the light
	wear respiratory protection
	wear eye protection
	wear hearing protection
	read all documentation
	do not expose to rain

Batteries and Chargers

The battery pack is not fully charged out of the carton. Before using the battery pack and charger, read the safety instructions below and then follow charging procedures outlined. When ordering replacement battery packs, be sure to include the catalog number and voltage.

READ ALL INSTRUCTIONS

SAVE ALL WARNINGS AND INSTRUCTIONS FOR FUTURE REFERENCE

Important Safety Instructions for All Battery Packs

⚠ ***WARNING: Read all safety warnings, instructions, and cautionary markings for the battery pack, charger and product. Failure to follow the warnings and instructions may result in electric shock, fire and/or serious injury.***

- ***Use power tools only with specifically designated battery packs.*** *Use of any other battery packs may create a risk of injury and fire.*
- ***Under abusive conditions, liquid may be ejected from the battery; avoid contact. If contact accidentally occurs, flush with water. If liquid contacts eyes, additionally seek medical help.*** *Liquid ejected from the battery may cause irritation or burns.*
- ***Do not charge or use the battery pack in explosive atmospheres, such as in the presence of flammable liquids, gases or dust.*** *Inserting or removing the battery pack from the charger may ignite the dust or fumes.*

- ***NEVER force the battery pack into the charger or tool. DO NOT modify the battery pack in any way to fit into a non-compatible charger as battery pack may rupture causing serious personal injury***.
- ***Charge the battery packs only in DEWALT chargers.***
- ***DO NOT*** *splash or immerse in water or other liquids.*
- ***DO NOT*** *allow water or any liquid to enter battery pack.*
- ***Do not store or use the tool and battery pack in locations where the temperature may reach or exceed 104 °F (40 °C) (such as outside sheds or metal buildings in summer).*** *For best life, store battery packs in a cool, dry location.*

NOTE: Do not store the battery packs in a tool with the trigger switch locked on. Never tape the trigger switch in the ON position.

- ***Have servicing performed by a qualified repair person using only identical replacement parts.*** *This will ensure that the safety of the product is maintained.*
- ***Do not incinerate the battery pack even if it is severely damaged or is completely worn out.*** *The battery pack can explode in a fire. Toxic fumes and materials are created when lithium-ion battery packs are burned.*
- ***Do not expose a battery pack or appliance to fire or excessive temperature.*** *Exposure to fire or temperature above 265 °F (130 °C) may cause explosion.*
- ***Follow all charging instructions and do not charge the battery pack or appliance outside of the temperature range specified in the instructions.*** *Charging improperly or at temperatures outside of the specified range may damage the battery and increase the risk of fire.*
- ***If battery contents come into contact with the skin, immediately wash area with mild soap and water.*** *If battery liquid gets into the eye, rinse water over the open eye for 15 minutes or until irritation ceases. If medical attention is needed, the battery electrolyte is composed of a mixture of liquid organic carbonates and lithium salts.*
- ***Contents of opened battery cells may cause respiratory irritation.*** *Provide fresh air. If symptoms persist, seek medical attention.*
- ***Battery liquid may be flammable if exposed to spark or flame.***
- ***Never attempt to open the battery pack for any reason. If the battery pack case is cracked or damaged, do not insert into the charger or tool.*** *Do not crush, drop or damage the battery pack. Do not use a battery pack or charger that has received a sharp blow, been dropped, run over or damaged in any way (e.g., pierced with a nail, hit with a hammer). Contact your DEWALT service center or distributor for returning damaged battery packs.*
- ***Do not use a battery pack or tool that is damaged or modified.*** *Damaged or modified batteries may exhibit unpredictable behavior resulting in fire, explosion or risk of injury.*
- ***Do not modify or attempt to repair the battery pack except as indicated in the instructions for use and care.***
- ***Under abusive conditions, liquid may be ejected from the battery; avoid contact.*** *If contact occurs, flush with water. If liquid contacts eyes, additionally seek medical help. Liquid ejected from the battery may cause irritations or burns.*
- ***When battery pack is not in use, keep it away from other metal objects, like paper clips, coins, keys, nails, screws or other small metal objects, that can make a connection from one terminal to another.*** *Shorting the battery terminals together may cause burns or a fire.*

Storage Recommendations

The best storage place is one that is cool and dry, away from direct sunlight and excess heat or cold. Store the fully charged battery pack out of the charger or tool for optimal storage life.

Battery Pack Cleaning Instructions

Dirt and grease may be removed from the exterior of the battery pack using a cloth or soft non-metallic brush. Do not use water or any cleaning solutions.

Fuel Gauge Battery Packs (Fig. B)

Some battery packs include a fuel gauge. When the fuel gauge button is pressed and held, the LED lights will indicate the approximate level of charge remaining. This does not indicate tool functionality and is subject to variation based on product components, temperature, and end-user application.

Transportation

⚠ ***WARNING: Fire hazard. Do not store, carry, or transport the battery pack so that metal objects can contact exposed battery terminals.*** *For example, do not place the battery pack in aprons, pockets, tool boxes, product kit boxes, drawers, etc., with loose nails, screws, keys, coins, hand tools, etc. When transporting individual battery packs, make sure that the battery terminals are protected and well insulated from materials that could contact them and cause a short circuit.* ***NOTE:*** *Li-ion battery packs should not be put in checked baggage on airplanes and must be properly protected from short circuits if they are in carry-on baggage.*

Shipping the DEWALT POWERSHIFT® Battery Pack

Your DEWALT POWERSHIFT® battery pack of 600 Wh or less has a shipping card that should be used when shipping POWERSHIFT® batteries.

Attach the card to the battery pack to ready it for shipping. This converts the battery pack to three separate batteries. The three batteries have the Watt hour rating labeled “Shipping” on the battery pack for US ground shipments. If shipping without the card, the pack is one battery at the Watt hour rating labeled "Use."

Example battery pack label:

USE: 554 Wh SHIPPING: 3 x 184.5 Wh

In this example, the battery pack is three batteries with 184.5 Watt hours each when using the card. Otherwise, the battery pack is one battery with 554 Watt hours.

Battery Recycling

It is important to recycle lithium ion batteries at end of life as they contain valuable materials that can be reused for new purposes. Do not discard lithium ion batteries in the trash as they can be crushed and start a fire during processing. The batteries that are supplied with this equipment are considered “High Energy Batteries” which mean that have an energy greater than 300 Wh and need to be recycled in a different a program than other lower energy rechargeable