CORTEX

VHF | AIS | MONITOR

PRODUCT OVERVIEW

VHF

The world's most advanced VHF with multi-station wireless touchscreen handsets.

AIS

Built-in Class B SOTDMA *smart*AIS with no-loss splitter.

MONITOR

Track and control, whether on board or ashore.

vesper

VHF Reimagined

Cortex is a revolution in marine technology that will change your VHF experience forever with an intuitive touchscreen engineered to withstand the rigours of the harsh marine environment.

The power of VHF and AIS combined

Cortex is the world's first VHF with high speed SOTDMA AIS transponder technology, making your boat visible to others. A built-in heading sensor tells other vessels your direction, helping them more accurately predict potential collisions. See critical information about vessels, AIS Aids to Navigation and man overboard devices on your MFD, mobile or Cortex handset.

Collision Avoidance & One-touch DSC

Cortex continuously calculates collision risk and warns you with voice annunciated alerts. View crossing situations, navigation light sectors and perform trial maneuvers while talking on the VHF radio. Initiate direct calls (DSC) with other vessels by simply tapping the vessel on your handset touchscreen. Push to talk to quickly hail another vessel when every second counts.

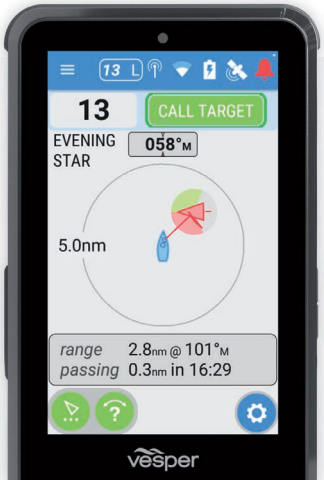

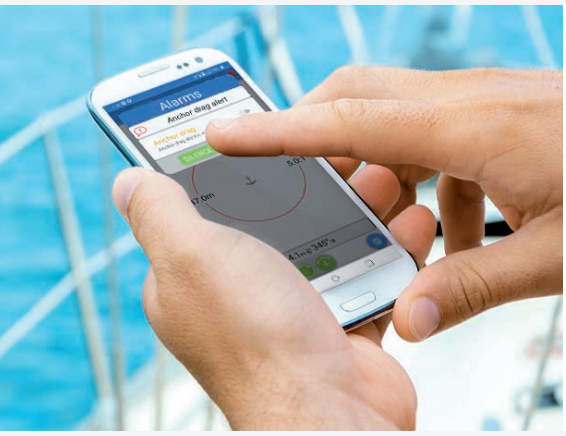

Monitor

Cortex combines built-in sensors, external sensor inputs and NMEA 2000 connectivity with free basic monitoring. Using cloud connectivity, you can view twice-daily updates of power, location, wind, depth, bilge, temperature and more on your smartphone.

The Cortex Monitor Premium subscription unlocks real-time vessel status, instant alerts and device control for boat systems like refrigerators, icemakers, lights or heaters.

Anchor Watch on board and ashore

By combining your position and heading, Cortex will determine if your anchor drags. If your boat moves outside your anchor swing radius the alarm will sound on Cortex handsets, connected speaker and your smartphone. Receive alerts while ashore via the Cortex Monitor App on your smartphone.

CORTEX HUB

M1 & V1

Cortex M1 Hub is a Full Class B SOTDMA *smart*AIS with out-of-the-box monitoring. Cortex V1 combines Cortex M1 with Cortex H1 Tethered Handset to provide full VHF functionality. Optionally add H1P Portable Handsets for even greater freedom on board.

Cortex is the world's first VHF with high speed SOTDMA AIS transponder technology making your boat visible to others. A built-in heading sensor tells other vessels your direction, helping them more accurately predict potential collisions.

Configure and monitor the Cortex system and receive alerts to a connected smartphone on the Cortex Onboard App or receive alerts and control devices on the boat remotely using the Cortex Monitor App.

- Add H1 Tethered & H1P Portable handset for VHF capability
- Built-in Class B SOTDMA
- Built-in antennas for WiFi and cloud connectivity for monitoring on board and ashore
- Transmit AIS and VHF simultaneously
- Universal compatibility
- Low power consumption
- Galvanically isolated ports
- Monitor up to 5 external sensors connected directly
- Network to NMEA 2000 to monitor sensors remotely or supported 3rd Party Apps
- Integrated no-loss AIS / VHF splitter
- IPx7 full plastic housing
- 10Hz GPS and external antenna port
- GNSS: GPS, GLONASS, Bei Dou, Galilleo
- Anti jamming feature

TECHNICAL

1 VHF Antenna In
2 VHF Antenna Out (no-loss splitter)
3 DC Power (12/24V)
4 GPS/GNSS, WiFi and Cloud ports
5 Mounting holes
6 External Speaker output
7 General Purpose Input / Output, NMEA 0183
8 NMEA 2000 port
9 Coloured backlit status indicators for GPS/GNSS, VHF/AIS, WiFi, Cloud and Power

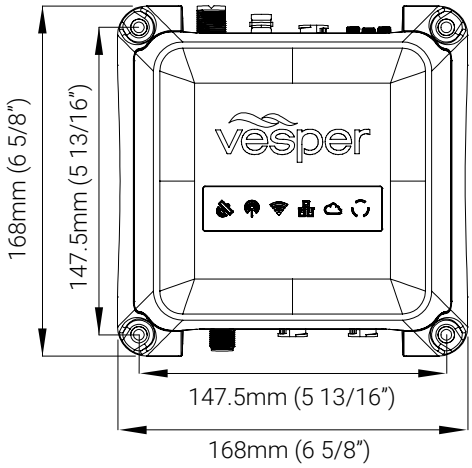

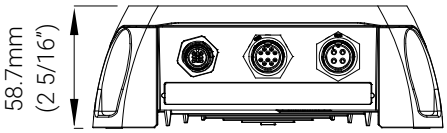

NOTE: Measurements based on metric.

CORTEX ONBOARD APP

Configure and Monitor your Cortex system from your smartphone anywhere on board. Receive alerts for collision threats, anchor drags and more. **Android and iOS**

TETHERED & PORTABLE HANDSETS

H1 & H1P

The Cortex Handset is available in H1 Tethered and H1P Portable versions. Connect up to 10 Cortex Handsets to a Hub.

A revolution in marine technology that will change your VHF experience forever. An intuitive touchscreen that is engineered for durability to withstand the rigours of the harsh marine environment. Audio that's as loud as a train but clear as a bell. The future of VHF is here.

- Intuitive functionality
- Secure mounting and charging cradle
- One-touch DSC
- Single-handed operation with roary click-wheel
- Wireless freedom on board
- Up to 85 dBA audio
- Wide angle & sunlight viewable
- Pinch-to-zoom
- Critical data always in view
- Durability in wet and rough conditions
- Gorilla Glass
- Wet use touchscreen

TECHNICAL

1 DSC distress call button
2 Up to 85 dBA high fidelity speaker
3 Side volume buttons
4 Power On button
5 DSC Call shortcut
6 Channel 16 shortcut key
7 MOB waypoint activation
8 Click-wheel rotary controller
9 Microphone
10 VHF screen shortcut key
11 Return key
12 Menu key
13 Push to talk key
14 4-inch touch screen
15 Protective rubber overmould
16 Power cord

H1

H1P

HANDSET

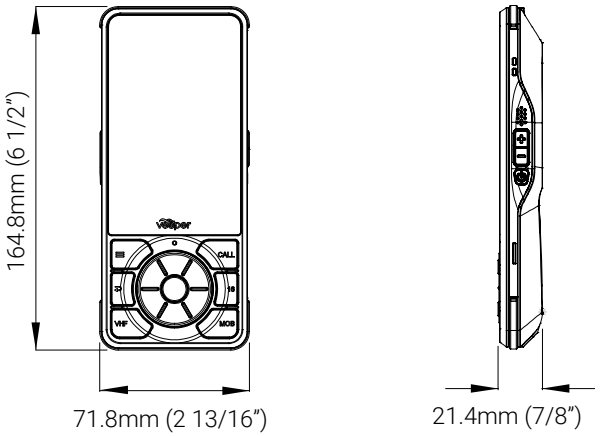

CRADLE

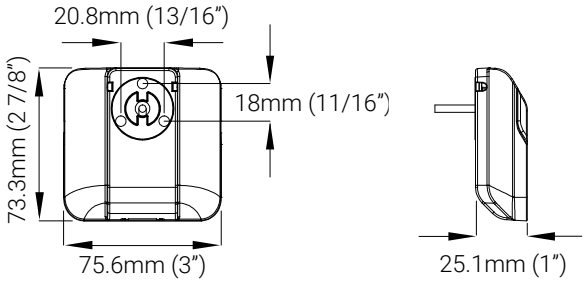

NOTE: Measurements based on metric.

CORTEX MONITORING

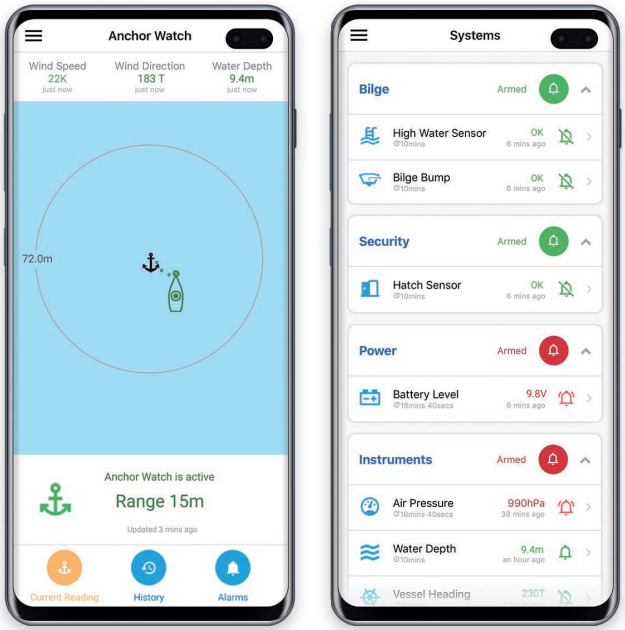

CORTEX MONITOR

Download the free Cortex Monitor App from Google Play or the App Store. Use your smartphone to monitor your vessel and receive alerts.

Know your vessel is safe and secure while you are ashore. See boat status, receive alerts and control devices. Cortex sends updates to the cloud and sends status and alerts directly to your mobile via the Monitor App.

- Built into the Cortex Hub
- Free download with easy setup
- Free out-of-the-box monitoring
- Add external sensors and controls
- Real-time monitoring and control via Premium Subscription
- In-App Upgrade to Cortex Monitor Premium Subscription
- Monthly subscription - cancel any time

CORTEX MONITOR PLANS

Download the free Cortex Monitor App from Google Play or the App Store. Annual & Monthly Subscription are purchased within the Cortex Monitor App.

FREE	PREMIUM
Free	Monthly €20 or Annual €120
See twice daily updates on the Cortex Monitor App	See real-time updates on the Cortex Monitor App
In-App Alarms	Instant alarm notifications
	On board device control
	Anchor Watch
	Geofence

WHAT YOU CAN MONITOR

- Built-in monitoring:
  - Battery voltage
  - Barometric pressure
  - Boat position
- External sensor monitoring includes:
  - Bilge level
  - Bilge pump activation and cycles
  - Temperature
  - Security
  - Wind indicator
  - Water depth
  - NMEA2000 network
  - Additional sensors

GET MORE WITH PREMIUM

- Real-time updates on monitored sensors
- Instant push notifications for monitoring alarms to your smart phone
- Control of on board devices remotely
- *smart*AIS Anchor Watch for accurate anchor drag detection
- Geofence location alarms

COVERAGE:

Where you purchase Cortex determines monitoring coverage. Ensure you purchase the Cortex version that is correct for your region.

USA, Canada, Australia, New Zealand, Europe, United Kingdom

Rest of world & Roaming Contact us to find out more about additional coverage and roaming options.

SPECIFICATIONS

CORTEX HUB	
GENERAL SPECIFICATIONS	
HUB SIZE	168 x 168 x 58.7mm (6 5/8" x 6 5/8" x 2 5/16")
POWER SUPPLY	9-33V. 12V: 6A max, 500mA nom
WEIGHT	770g (1.7lb)
ENVIRONMENTAL	Waterproof (IPx7)
OPERATING TEMPERATURE	-25°C to +55°C (-13°F to +131°F)
SUPPORTED PROTOCOLS	AIS Class B SOTDMA, VHF Voice, Class D DSC, ATIS (user configurable, EU region) NOAA Weather (US region)
TRANSMITTER FREQUENCY ERROR	Less than 300Hz
ANT CONNECTOR	SO239
SPLITTER	Max input power 25W, Insertion Loss RX 0dB, TX < 1dB
SPLITTER CONNECTOR	BNC
VHF VOICE	
VHF FREQUENCY RANGE TX RX	156.025–161.600 MHz 156.050–163.275 MHz
DEDICATED RX CHANNELS	3
POWER OUTPUT	25W, 1W (High, Low)
REGIONS	USA, CAN, INT
SENSITIVITY (12 DB SINAD)	-116 dBm
ADJACENT CHANNEL SELECTIVITY	80 dB
SPURIOUS RESPONSE	70 dB
INTERMODULATION	70 dB
SPURIOUS EMISSIONS	Less than –80 dBc (at 25 W)
MAX AUDIO OUTPUT POWER	10W, < 1% THD
CLASS D DSC	
DEDICATED RX CHANNELS	1
SENSITIVITY (1% BER)	-113 dBm
ADJACENT CHANNEL SELECTIVITY	80 dB
SPURIOUS RESPONSE	70 dB
INTERMODULATION	70 dB
SOTDMA CLASS B AIS	
DEDICATED RX CHANNELS	2
FREQUENCY RANGE	156.025 – 162.025 MHz
POWER OUTPUT	5W, 1W (High, Low)
AIS SENSITIVITY (20% PER)	-112 dBm
ADJACENT CHANNEL SELECTIVITY	80 dB
SPURIOUS RESPONSE	70 dB
INTER-MODULATION	65 dB
AUDIO	
SUPPORTED FUNCTIONS	VHF RX, Alarms
AMPLIFIER	10W Class D, THD < 1%
SPEAKER	4 ohm

GNSS	
SENSITIVITY	-167dBm
CONSTELLATIONS	GPS, GLONASS, Bei Dou, Galilleo
CHANNELS	72
DIFFERENTIAL SUPPORT	SBAS, WAAS, EGNOS
NAVIGATION RATE	10Hz
CONNECTOR	SMA
CERTIFICATIONS	IEC 61108
FEATURES	Anti-jamming, Anti-spoofing
NETWORKING	
NMEA 2000 GATEWAY	1 x Isolated Micro-C male port, AIS, GPS & MOB PGN output, Gateway Translations to/from NMEA 0183
NMEA 0183	1 x Isolated NMEA 0183 port, AIS and GPS sentences, Gateway Translations to/from NMEA 2000, 4800 / 38400 baud
WIRELESS	Access Point for up to 10 devices, 2.4GHz, 802.11b/g/n, Integrated Antenna, SMA-RP external antenna port (optional)
WIRELESS SECURITY	WPA2 Personal
CLOUD CONNECTIVITY	LTE-Cat1 with 3G fallback (USA), 3G (Canada, EU, Asia), Integrated SIM, Integrated Antenna, SMA-RP external antenna port (optional)
CONTROL OUTPUTS	2 Outputs, Low side driven (max 200mA)
SENSORS	
HEADING	9-Axial, Internal use only, Accuracy: +/- 1 deg, Updated rate: 10Hz (max)
BAROMETER	Update rate 1Hz max (averaged)
BATTERY VOLTAGE	Measured at power input
EXTERNAL SENSORS INPUTS	5 Inputs, Digital (0-24V), Analog (0-10V)

CORTEX HANDSETS	
GENERAL SPECIFICATIONS	
HANDSET SIZE	164.8 x 71.8 x 21.4mm (6 1/2" x 2 13/16" x 7/8")
POWER SUPPLY	12V, 1A max, 200mA nom 12-24V compatible
BATTERY	Lithium Polymer 2 hour full charge, >12 hours nominal operation
WEIGHT	H1 285g (0.63lb), H1P 235g (0.52lb)
ENVIRONMENTAL	Waterproof (IPx7)
OPERATING TEMPERATURE	-25°C to +55°C (-13°F to +131°F)
AUDIO	3W Class D amplifier, THD < 5% @ 85dBA
DISPLAY	
SCREEN	LCD TFT Si, 640 x 800, 24bit Colour
TOUCH	Capacitive, optically bonded, LCD, glove and salt water operable
BACKLIGHT	600 cd/m2, Ambient Light sensor for auto dimming

All stated specifications are subject to change without notice or obligation. Dimensional measurements based on metric.

CORTEX RANGE

CORTEX M1 AIS	
PRODUCT CODE	CORTEX- M1
DESCRIPTION	SOTDMA *smart*AIS transponder with remote vessel monitoring
INCLUDED	M1 Hub, GPS Antenna, Power Cable, Audio Cable, External Sensors Cable, External WiFi Antenna, VHF patch cable.
PACKAGING	330 x 218 x 148mm (1' 1" x 8 9/16" x 5 13/16") 1.64 kg (3.61 lb)

CORTEX H1P PORTABLE HANDSET	
PRODUCT CODE	CORTEX-H1P
DESCRIPTION	Cortex H1P Portable Rechargable Handset
INCLUDED	H1P Portable Rechargable Handset, Charging H1P Cradle, Non Powered H1 Cradle
PACKAGING	213 x 98 x 58 mm (8 3/8" x 3 7/8" x 2 5/16") 0.34 kg (0.75 lb)

Compatible with Cortex M1 and V1 bundles.

CORTEX V1 VHF WITH AIS	
PRODUCT CODE	CORTEX-V1
DESCRIPTION	VHF radio with SOTDMA *smart*AIS and remote vessel monitoring
INCLUDED	M1 Hub, H1 Tethered Handset, GPS Antenna, Power Cable, Audio Cable, External Sensors Cable, External WiFi Antenna.
PACKAGING	330 x 218 x 148mm (1' 1" x 8 9/16" x 5 13/16") 1.98 kg (4.37 lb)

CORTEX H1 TETHERED HANDSET	
PRODUCT CODE	CORTEX-H1
DESCRIPTION	Cortex H1 Tethered Handset
INCLUDED	H1 Tethered Handset, Non Powered H1 Cradle
PACKAGING	213 x 98 x 58 mm (8 3/8" x 3 7/8" x 2 5/16") 0.34 kg (0.75 lb)

Compatible with Cortex M1 and V1 bundles.

ACCESSORY CODE	DESCRIPTION	CORTEX-M1	CORTEX-V1	CORTEX-H1	CORTEX-H1P
EXSPKR	EXTERNAL SPEAKER				
RAIL-H1P	RAILBLAZA MOUNT				
141005	SMART AIS ALARM & SWITCH KIT				
NMEA-2M	NMEA 2000 DROP CABLE 2M (6' 6 3/4")				
NMEA-T	NMEA 2000 TEE				
CRDL-H1	NON-POWERED H1 CRADLE			Included	Included
CRDL-HIP	CHARGING H1P CRADLE (POWERED)				Included
PTC-VHF	M1 PATCH CABLE (BNC TO PL259 FOR SPLITTER)	Included			
PTC-GPS	GPS LOW LOSS PATCH CABLE, 10M (32' 9 11/16")	Included	Included		

CORTEX

VHF | AIS | MONITOR

vesper

Vesper Marine | vespermarine.com

vespercortex.com