Specification Approval Sheet

Vender Name	Shenzhen i-Top Technology Co., Ltd B05, 6th Floor, Building 2, Daqian Industrial Park, Xingdong Community, Xin'an Street, Bao'an District, Shenzhen
Project Name	A100M
Part Name	A100M-L
Part Number	A100M-L-V5.0
Part Version	V5.0
Part Spec.	

The materials meet the following environmental requirements:

☐ Banned and Monitored Substances Control Standard(Latest Edition)

☐ Halogen-free technical standard

Vender Confirm (Stamp)	Prepared by	Checked by	Approved by

Customer Approved (Stamp)	Sourcing	DQ	RD	Approved by

Index

Cover •1

Index •2

Change history •3

The basic parameters • • • • • • • • • • • • • • • • • •4

TestEquipment & Conditions • • • • • • • • • • • • • •5

Test Report •6—9

Product Drawing •10

RoHS/Bill of materials • • • • • • • • • • • • • • • •11

Change history

Number	Effective date	Change record
R5.0	2025.1.11	Initial release

The basic parameters

A. Electrical Characteristics	
Frequency	**2400MHZ~2500MHZ**
VSWR	**< 2**
Avg Efficiency	**>20%**
Impedance	**50 ± 25 Ohm**
Polarization	**Linear**
Peak Gain	**2.4G:-0.28dBi**
B. Material & Mechanical Characteristics	
Material of Radiator	**FPC black**
Cable Type	
Connector Type	
Dimension	
C. Environmental	
Operation Temperature	**- 20 ˚C ~ + 60 ˚C**
Storage Temperature	**- 30 ˚C ~ + 70 ˚C**

Introduction:

Microwave darkroom and no reflection chamber, absorbing short wave darkroom dark room. Microwave darkroom by electromagnetic shielding room, filtering and isolation, grounding device, the ventilation duct, indoor distribution system, monitoring system, ceiling wave material part. It is based on the wave absorbing material as the lining of the shield room, it can absorb the most of the electromagnetic energy into the six wall is a better simulation of the free space conditions.

The main working principle of microwave anechoic chamber is according to the electromagnetic wave in the medium from the low magnetic guide magnetic direction of propagation rules, absorbing materials to guide the electromagnetic wave using high permeability, through resonance, a substantial absorption of electromagnetic wave radiation energy, by coupling the electromagnetic energy into heat energy.

main performance ：

Frequency range:400MHz ~ 6GHz ceiling reflected wave loss materials: 400MHz ~ 6GHz is equal to or more than 15dB (microwave absorbing material by composite wave absorbing materials, namely tapered containing carbon sponge suction wave material paste in ferrite)

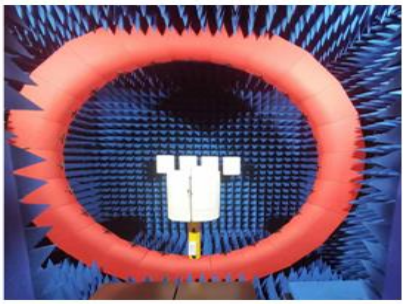

Test Report

Those specifications were specially defined for A100M model.

1. Machine pictures and antenna assembly

VSWR

2.Measuring Method

1.A 50Ωcoaxial cable is connected to the antenna. Then this cable is connected to a network analyzer to measure the VSWR

2.Keeping this jig away from metal at least 20cm

3.Measurement frequency points and VSWR value

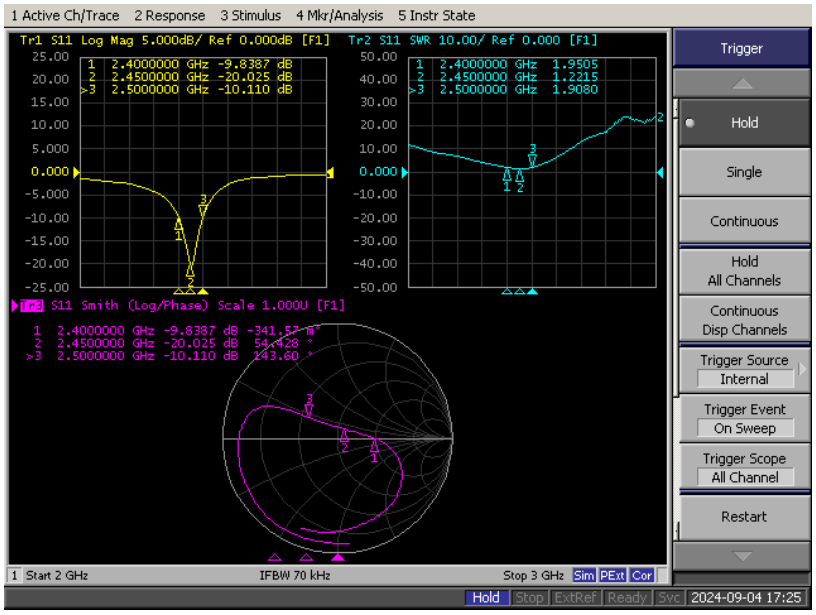

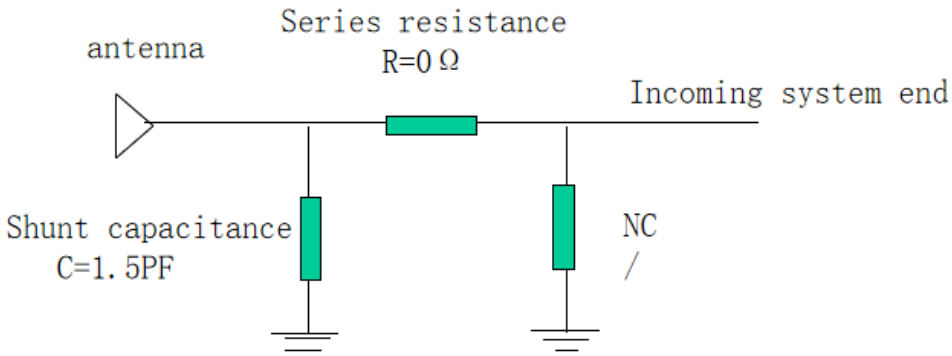

The left and right ears match the same parameters

4.Gain table of Antenna:

Passive field pattern diagram-L

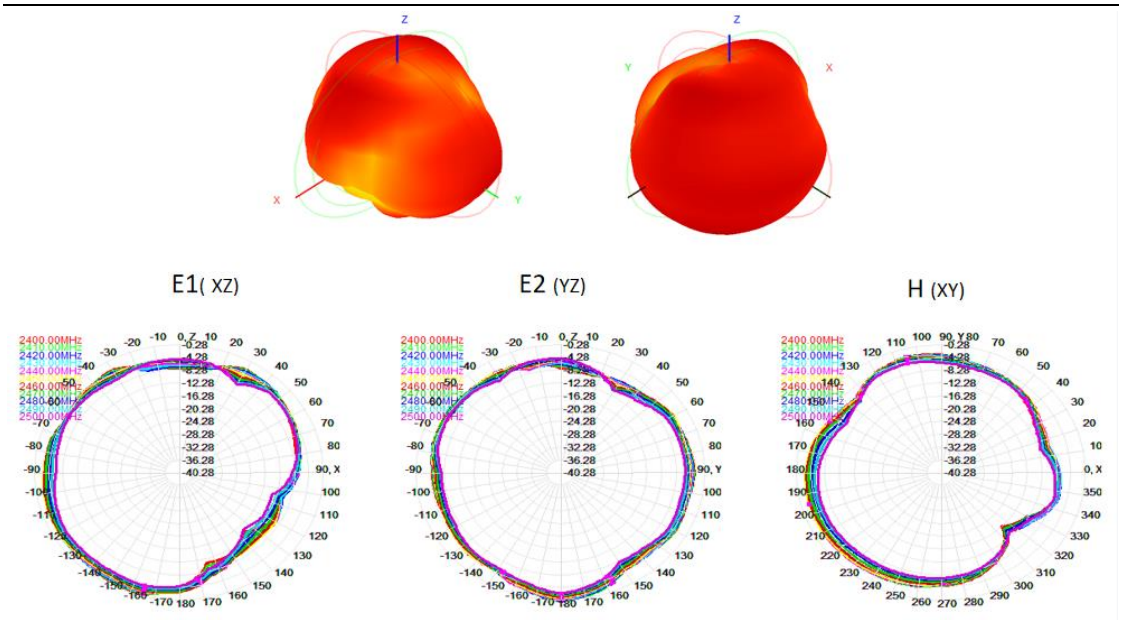

Passive efficiency gain-L

L		
Freq (MHz)	Effi (%)	Gain (dBi)
2400	28.57	-0.29
2410	28.58	-0.28
2420	28.72	-0.49
2430	28.89	-0.68
2440	28.77	-0.91
2450	28.62	-1.02
2460	27.34	-1.29
2470	25.59	-1.76
2480	23.44	-2.35
2490	22.22	-2.56
2500	20.69	-2.71

Active free space field pattern diagram -L - TRP

0

39

78

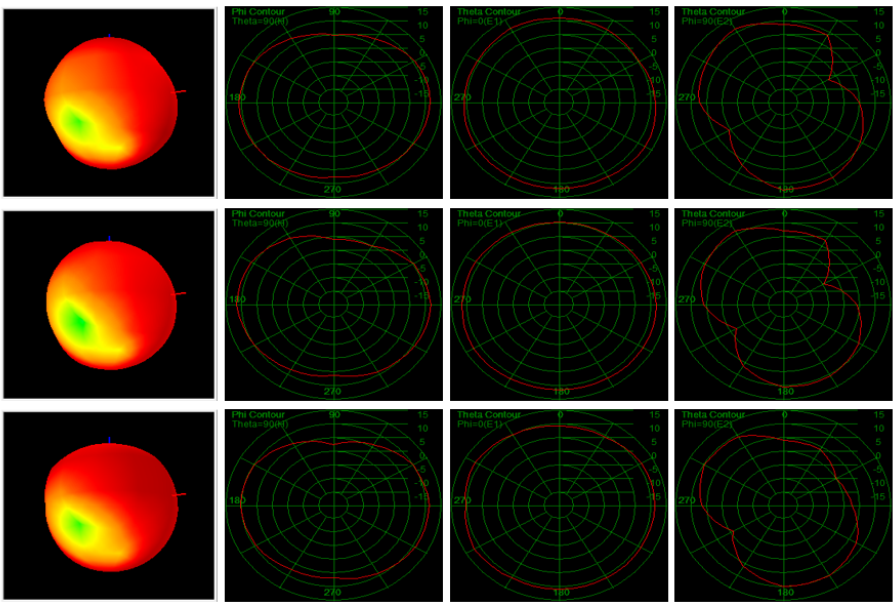

Active free space field pattern diagram -L - TIS

0

39

78

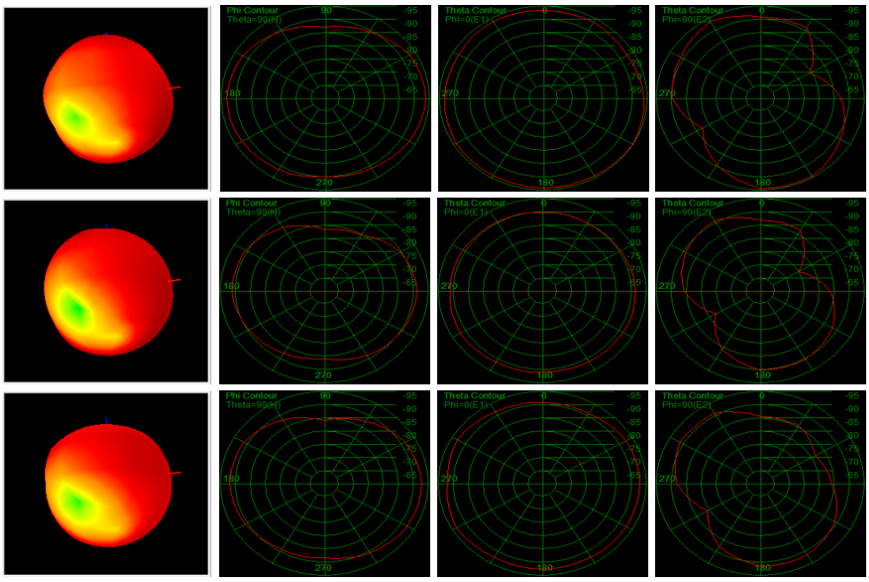

Source field pattern diagram -L - TRP

0

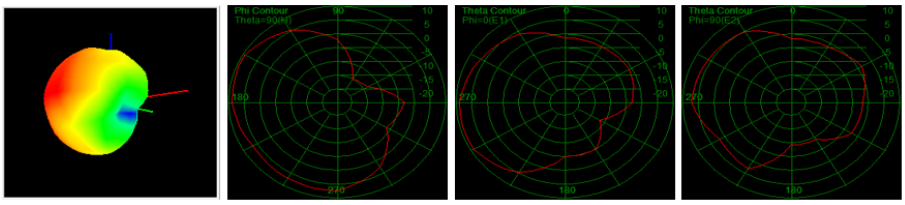

39

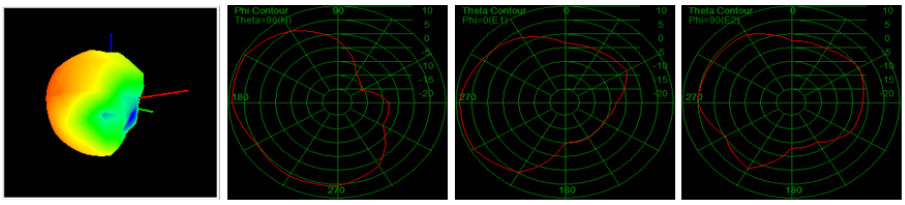

78

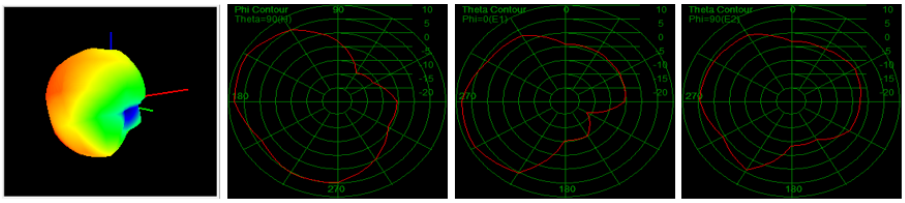

Source field pattern diagram -L - TIS

0

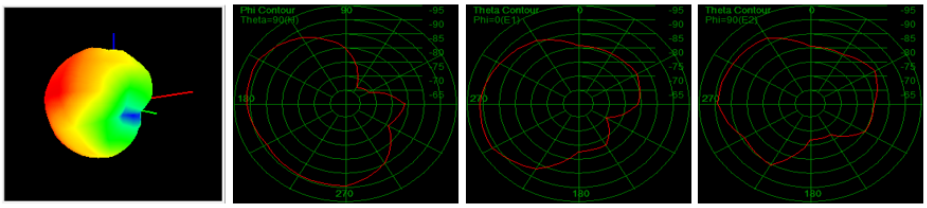

39

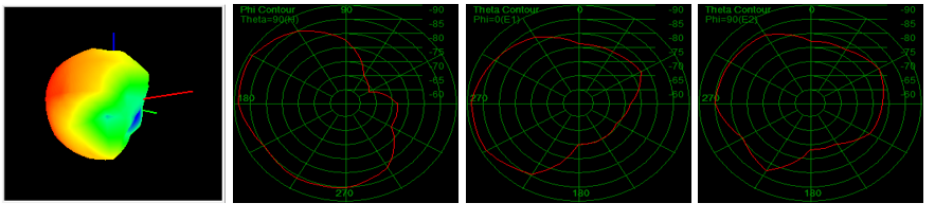

78

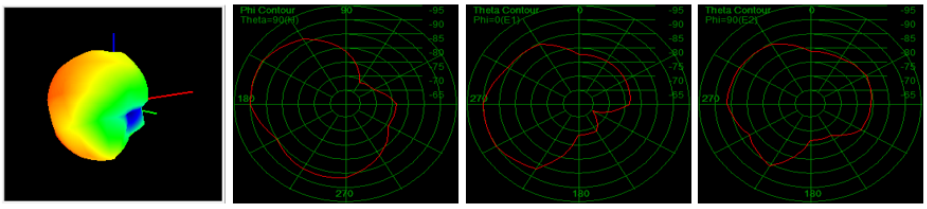

5.OTA：

L					
Free space			Head model space		
BAND	TRP（dBm）	TIS（dBm）	BAND	TRP（dBm）	TIS（dBm）
0	9.56	-91.86	0	3.54	-85.75
39	9.33	-89.01	39	2.96	-82.69
78	8.88	-90.46	78	2.38	-84.17

Product Drawing

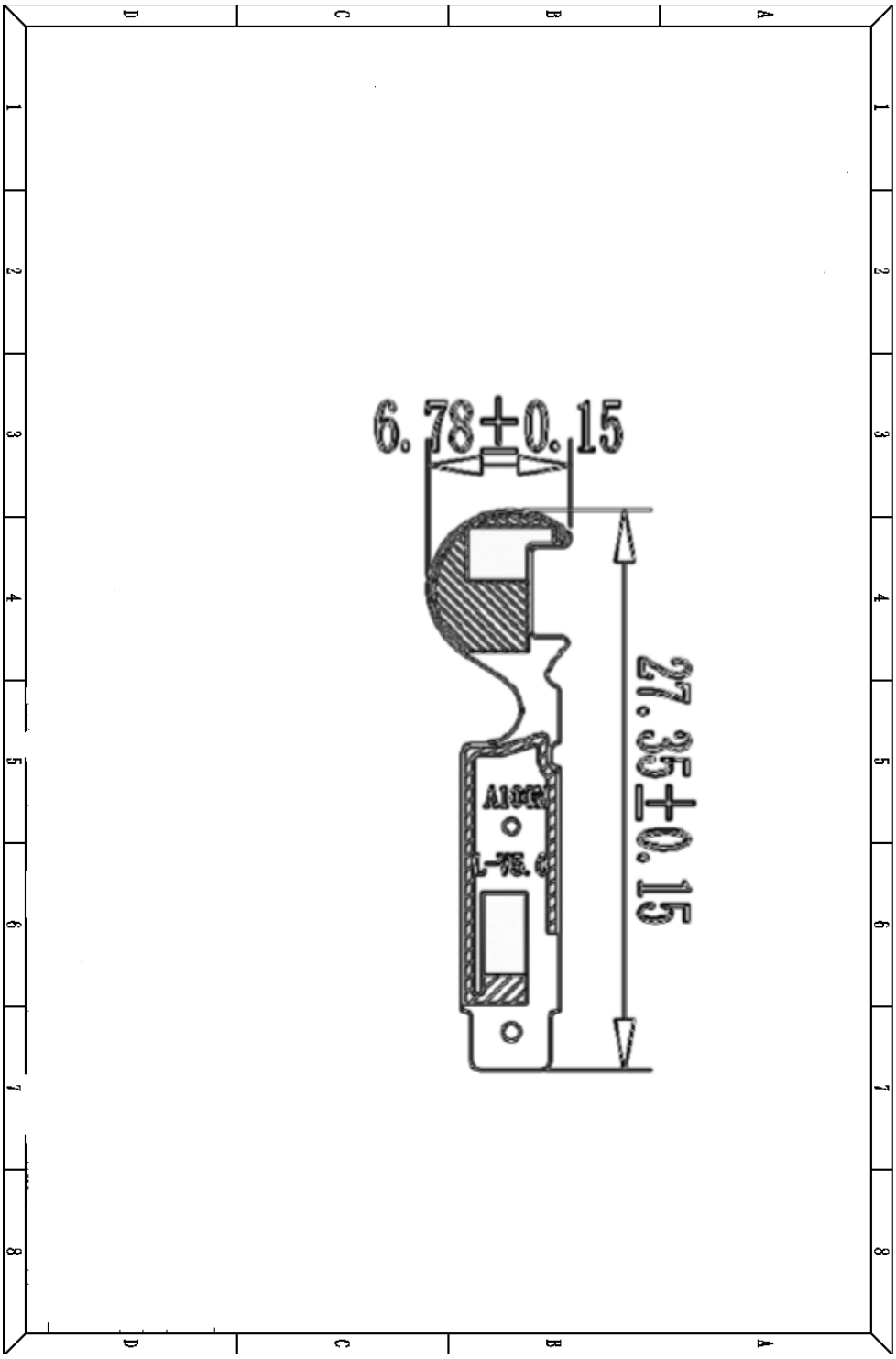

ROHS

Antenna _____

meets ROHS requirements See electronic file for details.

Product packaging instructions

A. packing should meet the moisture-proof, vibration, pressure and mildew proof, etc.

B. the smallest packing unit logo must have the manufacturer trademarks, product model, name, code and quantity.

C. in the attached packing list, certificate of approval, and the factory inspection report.

**********END**********