CAMBRIDGE AUDIO

CXA61/81

INTEGRATED AMPLIFIER

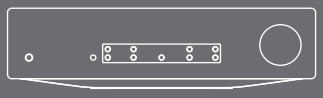

Contents

IMPORTANT SAFETY INSTRUCTIONS	3
LIMITED WARRANTY	5
REAR PANEL CONNECTIONS	6
FRONT PANEL CONTROLS	7
REMOTE CONTROL	8
CONNECTIONS	9
BASIC CONNECTIONS	9
SPEAKER B CONNECTIONS	9
PREAMP OUT CONNECTIONS	9
BALANCED AUDIO CONNECTIONS (CXA81 ONLY)	9
USB AUDIO CONNECTION	9
SETUP MENU	10
AUTO POWER DOWN (APD)	10
CLIPPING FUNCTION	10
USB MODE	10
ADVANCED USB AUDIO	10
USE WITH PCS/MACS/LINUX	10
BLUETOOTH AUDIO STREAMING	10
PAIRING	10
CONTROL BUS	11
CAMBRIDGE CONNECT APP (VIA CXN)	11
CAP5 - FIVE WAY PROTECTION SYSTEM	12
TROUBLESHOOTING	12
TECHNICAL SPECIFICATIONS	13

This guide is designed to make installing and using this product as easy as possible. Information in this document has been carefully checked for accuracy at the time of printing; however, Cambridge Audio's policy is one of continuous improvement, therefore design and specifications are subject to change without prior notice.

This document contains proprietary information protected by copyright. All rights are reserved. No part of this manual may be reproduced by any mechanical, electronic or other means, in any form, without prior written permission of the manufacturer. All trademarks and registered trademarks are the property of their respective owners.

© Copyright Cambridge Audio Ltd 2019.

Make sure you register your CA product:
WWW.CAMBRIDGEAUDIO.COM/REGISTER

For upcoming news on future products, software updates and exclusive offers.

Support

FAQS AND SUPPORT

Please visit https://techsupport.cambridgeaudio.com

GET IN CONTACT WITH OUR
DEDICATED TECHNICAL SUPPORT TEAM:

support@cambridgeaudio.com

UK: +44 20 7551 5422
US: +1 877 357-8204
HK: +852 2882 4000

Important safety instructions

For your own safety please read the following important safety instructions carefully before attempting to connect this unit to the mains power supply. They will also enable you to get the best performance from and prolong the life of the unit:

1. Read these instructions.
2. Keep these instructions.
3. Heed all warnings.
4. Follow all instructions.
5. Do not use this apparatus near water.
6. Clean only with a dry cloth.
7. Do not block any ventilation openings. Install in accordance with the manufacturer's instructions.
8. Do not install near any heat sources such as radiators, heat registers, stoves, or other apparatus (including amplifiers) that produce heat.
9. Do not defeat the safety purpose of the polarized or grounding-type plug. A polarized plug has two blades with one wider than the other. A grounding-type plug has two blades and a third grounding prong. The wide blade or the third prong are provided for your safety. If the provided plug does not fit into your outlet, consult an electrician for replacement of the obsolete outlet.
10. Protect the power cord from being walked on or pinched, particularly at plugs, convenience receptacles and the point where they exit from the apparatus.
11. Only use attachments/accessories specified by the manufacturer.
12. Use with only the cart, stand, tripod, bracket, or table specified by the manufacturer, or sold with the apparatus. When a cart is used, use caution when moving the cart/ apparatus combination to avoid injury from tip-over.

13. Unplug this apparatus during lightning storms or when unused for long periods of time.
14. Refer all servicing to qualified service personnel. Servicing is required when the apparatus has been damaged in any way, such as the power-supply cord or plug having been damaged, liquid has been spilled or objects have fallen into the apparatus, the apparatus has been exposed to rain or moisture, does not operate normally, or has been dropped.

WARNING:

- Do not place the unit in an enclosed space; if you wish to place the unit on a shelf, use the top shelf to allow maximum ventilation. Do not put any objects on top of this unit. Do not situate it on a rug or other soft surface and do not obstruct any air inlets or outlet grilles. Do not cover the ventilation grilles with items such as newspapers, tablecloths, curtains, etc.
- To reduce the risk of fire or electric shock, do not expose this apparatus to rain or moisture . This unit must not be used near water or exposed to dripping or splashing water or other liquids. No objects filled with liquid, such as vases, shall be placed on the unit.
- Danger of explosion if battery is incorrectly replaced. Replace only with the same or equivalent type.
- The battery (battery pack or batteries installed) shall not be exposed to excessive heat such as sunshine, fire or the like.
- The unit must be installed in a manner that makes disconnection of the mains plug from the mains socket outlet (or appliance connector from the rear of the unit) possible. Where the mains plug is used as the disconnect device, the disconnect device shall remain readily operable.
- Please refer to the information on the exterior rear panel for electrical and safety information before installing or operating the apparatus.
- Only use the mains cord supplied with this unit.

Use of the apparatus in tropical climates - The equipment shall be used at a maximum 45 degree C ambient temperature.

The unit is of Class 1 construction and must be connected to a mains socket outlet with a protective earthing connection.

The lightning flash with the arrowhead symbol within an equilateral triangle is intended to alert the user to the presence of un-insulated 'dangerous voltage' within the product's enclosure that may be of sufficient magnitude to constitute a risk of electric shock to persons.

Warning: To reduce the risk of electric shock, do not remove cover (or back) as there are no user-serviceable parts inside. Refer servicing to qualified personnel.

The exclamation point within an equilateral triangle is intended to alert the user to the presence of important operating and maintenance instructions in the service literature relevant to this appliance.

VENTILATION

Important! The unit will become hot when in use. Do not stack multiple units on top of each other.

Ensure that small objects do not fall through any ventilation grille. If this happens, switch off immediately, disconnect from the mains supply and contact your dealer for advice.

POSITIONING

Choose the installation location carefully. Avoid placing it in direct sunlight or close to a source of heat. No naked flame sources, such as lighted candles, should be placed on the unit. Also avoid locations subject to vibration and excessive dust, cold or moisture. The unit can be used in a moderate climate.

This unit must be installed on a sturdy, level surface. Do not place in a sealed area such as a bookcase or in a cabinet. Do not place the unit on an unstable surface or shelf. The unit may fall, causing serious injury to a child or adult as well as serious damage to the product. Do not place other equipment on top of the unit.

Due to stray magnetic fields, turntables or CRT TVs should not be located nearby due to possible interference.

Electronic audio components have a running in period of around a week (if used several hours per day). This will allow the new components to settle down and the sonic properties will improve over this time.

POWER SOURCES

The unit should be operated only from the type of power source indicated on the marking label. If you are not sure of the type of power-supply to your home, consult your product dealer or local power company.

If you do not intend to use this unit for a long period of time, unplug it from the mains socket.

OVERLOADING

Do not overload wall outlets or extension cords as this can result in a risk of fire or electric shock. Overloaded AC outlets, extension cords, frayed power cords, damaged or cracked wire insulation and broken plugs are dangerous. They may result in a shock or fire hazard.

Be sure to insert each power cord securely. To prevent hum and noise, do not bundle the interconnect leads with the power cord or speaker leads.

CLEANING

To clean the unit, wipe its case with a dry, lint-free cloth. Do not use any cleaning fluids containing alcohol, ammonia or abrasives. Do not spray an aerosol at or near the unit.

BATTERY DISPOSAL

Batteries may contain substances harmful to the environment. Please dispose of any discharged batteries with due consideration and in accordance with local environmental/electronic recycling guidelines.

SERVICING

These units are not user serviceable. Never attempt to repair, disassemble or reconstruct the unit if there seems to be a problem. A serious electric shock could result if this precautionary measure is ignored. In the event of a problem or failure, please contact your dealer.

WEEE SYMBOL

The crossed-out wheeled bin is the European Union symbol for indicating separate collection for electrical and electronic equipment. This product contains electrical and electronic equipment which should be reused, recycled or recovered and should not be disposed of with unsorted regular waste. Please return the unit or contact the authorised dealer from whom you purchased this product for more information.

CE MARK

This product complies with European Low Voltage (2014/35/EU), Electromagnetic Compatibility (2014/30/EU) and Environmentally-friendly design of Energy-related Products (2009/125/EC) Directives when used and installed according to this instruction manual. For continued compliance only Cambridge Audio accessories should be used with this product and servicing must be referred to qualified service personnel.

RCM (REGULATORY COMPLIANCE MARK)

This product meets Australia, New Zealand Safety, EMC and Radio Communications requirements of the ERAC and ACMA.

CU-TR MARK

This product meets Russia, Byelorussia and Kazakhstan electronic safety approvals.

CAUTION: HOT SURFACE. DO NOT TOUCH

Both side heat sinks of the product may become hot when operating this product continuously.

Due to the surface of both heat sinks being unsuitable to attach a label, there is no sticker on the product.

FEDERAL COMMUNICATIONS COMMISSION

Supplier's declaration of conformity (SDoC)

Equipment: Integrated Amplifier
Model: CXA61 / CXA81
Trademark: Cambridge Audio

This device complies with Part 15 of the FCC Rules. Operation is subject to the following two conditions: (1) this device may not cause harmful interference, and (2) this device must accept any interference received, including interference that may cause undesired operation.

The responsible party in US:

Company name: Audio Partnership LLC

Address:
1913 N Milwaukee Ave. Chicago, IL 60647

Phone: (312) 636-4817
Legal Representative Person:
Gregg Chopper

Signature:

FEDERAL COMMUNICATIONS COMMISSION NOTICE:

This equipment has been tested and found to comply with the limits for a Class B digital device, pursuant to Part 15 of the FCC Rules. These limits are designed to provide reasonable protection against harmful interference in a residential installation.

This equipment generates, uses, and can radiate radio frequency energy, and if not installed and used in accordance with the instructions, may cause harmful interference to radio communications. However, there is no guarantee that interference will not occur in a particular installation.

If this equipment does cause harmful interference to radio or television reception, which can be determined by turning the equipment off and on, the user is encouraged to try and correct the interference by one or more of the following measures:

- Reorient or relocate the receiving antenna.
- Increase the distance between the equipment and the receiver.
- Connect the equipment to an outlet on a circuit different from that to which the receiver is connected.
- Consult the dealer or an experienced radio/TV technician for help.

FCC Caution: Any changes or modifications not expressly approved by the party responsible for compliance could void the user's authority to operate this equipment.

RF Exposure Statement:

To maintain compliance with FCC's RF Exposure guidelines. This equipment should be installed and operated with a minimum distance of 20cm between the radiator and your body. Use only the supplied antenna.

Modifications:

The FCC requires the user to be notified that any changes or modifications to this device that are not expressly approved by Cambridge Audio, may void the user's authority to operate the equipment.

CANADA-INDUSTRY CANADA (IC)

This radio transmitter has been approved by Industry Canada.

This device complies with Industry Canada's license-exempt RSSs.

Operation is subject to the following two conditions.

(1) this device may not cause interference and (2) this device must accept any interference, including interference that may cause undesired operation of the device.

This equipment should be installed and operated with a minimum distance of 20cm between the radiator and your body.

The transmitter must not be co-located or operating in conjunction with any other antenna or transmitter.

The device meets the exemption from the routine evaluation limits in section 2.5 of RSS 102 and compliance with RSS-102 RF exposure, users can obtain Canadian information on RF exposure and compliance.

INDUSTRIE CANADA (IC)

Le présent appareil est conforme aux CNR d'Industrie Canada applicables aux appareils radio exempts de licence. L'exploitation est autorisée aux deux conditions suivantes :

(1) l'appareil ne doit pas produire de brouillage, et (2) l'utilisateur de l'appareil doit accepter tout brouillage radioélectrique subi, même si le brouillage est susceptible d'en compromettre le fonctionnement.

Cet équipement doit être installé et utilisé à une distance minimale de 20 cm entre le radiateur et votre corps.

L'émetteur ne doit pas être co-placé ni fonctionner en conjonction avec une autre antenne ou transmetteur.

Le dispositif rencontre l'exemption des limites courantes d'évaluation dans la section 2.5 de RSS 102 et la conformité à l'exposition de RSS-102 rf, utilisateurs peut obtenir l'information canadienne sur l'exposition et la conformité de rf.

EUROPE-EUROPEAN UNION NOTICE

Hereby, Audio Partnership PLC declares that this product is in compliance with Directive 2014/53/EU, the full text of the EU declaration of conformity is available at the following internet address:

https://www.cambridgeaudio.com/DoC

Bluetooth Radio Frequency:
2.402GHz-2.48 GHz The Max. transmit power: 10dBm.

Limited warranty

Cambridge Audio warrants this product to be free from defects in materials and workmanship (subject to the terms set forth below). Cambridge Audio will repair or replace (at Cambridge Audio's option) this product or any defective parts in this product. Warranty periods may vary from country to country. If in doubt consult your dealer and ensure that you retain proof of purchase.

To obtain warranty service, please contact the Cambridge Audio authorised dealer from which you purchased this product. If your dealer is not equipped to perform the repair of your Cambridge Audio product, it can be returned by your dealer to Cambridge Audio or an authorised Cambridge Audio service agent. You will need to ship this product in either its original packaging or packaging affording an equal degree of protection.

Proof of purchase in the form of a bill of sale or receipted invoice, which is evidence that this product is within the warranty period, must be presented to obtain warranty service.

This Warranty is invalid if (a) the factory-applied serial number has been altered or removed from this product or (b) this product was not purchased from a Cambridge Audio authorised dealer. You may call Cambridge Audio or your local country Cambridge Audio distributor to confirm that you have an unaltered serial number and/or you made a purchase from a Cambridge Audio authorised dealer.

This Warranty does not cover cosmetic damage or damage due to acts of God, accident, misuse, abuse, negligence, commercial use, or modification of, or to any part of, the product. This Warranty does not cover damage due to improper operation, maintenance or installation, or attempted repair by anyone other than Cambridge Audio or a Cambridge Audio dealer, or authorised service agent which is authorised to do Cambridge Audio warranty work. Any unauthorised repairs will void this Warranty. This Warranty does not cover products sold AS IS or WITH ALL FAULTS.

REPAIRS OR REPLACEMENTS AS PROVIDED UNDER THIS WARRANTY ARE THE EXCLUSIVE REMEDY OF THE CONSUMER. CAMBRIDGE AUDIO SHALL NOT BE LIABLE FOR ANY INCIDENTAL OR CONSEQUENTIAL DAMAGES FOR BREACH OF ANY EXPRESS OR IMPLIED WARRANTY IN THIS PRODUCT. EXCEPT TO THE EXTENT PROHIBITED BY LAW, THIS WARRANTY IS EXCLUSIVE AND IN LIEU OF ALL OTHER EXPRESS AND IMPLIED WARRANTIES WHATSOEVER INCLUDING, BUT NOT LIMITED TO, THE WARRANTY OF MERCHANTABILITY AND FITNESS FOR A PRACTICAL PURPOSE.

Some countries and US states do not allow the exclusion or limitation of incidental or consequential damages or implied warranties so the above exclusions may not apply to you. This Warranty gives you specific legal rights, and you may have other statutory rights, which vary from state to state or country to country.

For any service, in or out of warranty, please contact your dealer.

Rear panel connections

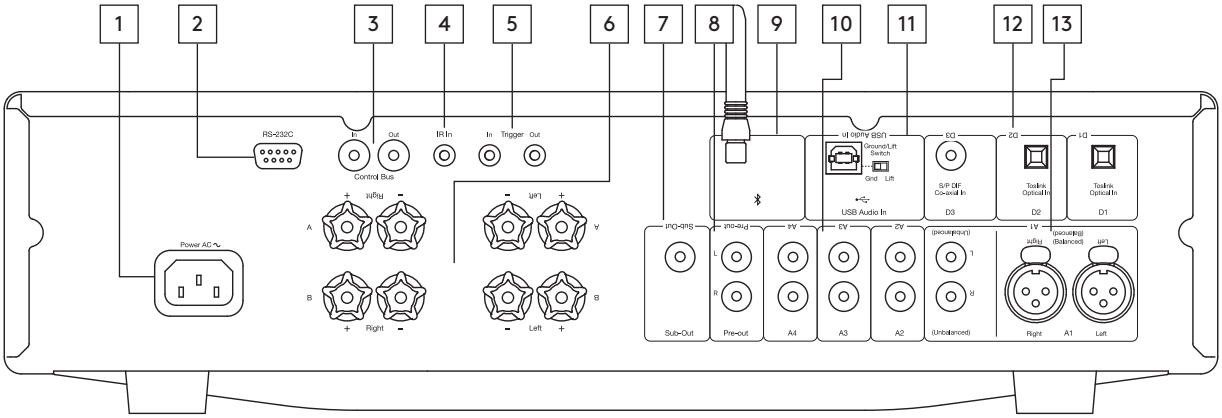

1. AC POWER SOCKET

Once you have completed all connections to the amplifier, plug the AC power cable into an appropriate mains socket then switch on. Your amplifier is now ready for use.

2. RS232C

Custom install control - a full protocol is available for the CXA on our website.

3. CONTROL BUS

RCA sockets used to send and receive power and volume commands from other connected CX Series products. For more information on the Control Bus, see Control Bus section.

4. IR IN

Allows modulated IR commands from an IR repeater or multi-room systems to be received by the amplifier.

5. TRIGGER IN/OUT

The CXA can be connected to the trigger control output of home automation equipment to control the power state of the CXA. The input level should be 12V.

The trigger out will go high while the CXA is powered on. This can be used to turn on other equipment that has a trigger in.

6. LOUDSPEAKER TERMINALS

Important Note: When using a banana plug, make sure the speaker terminals are completely tightened before inserting the plug.

Two sets of loudspeaker terminals are available, A (main loudspeaker terminals) and B (secondary loudspeaker terminals). Both sets of speakers can be turned on and off independently. Connect the wires from your left channel loudspeaker to the Left + & - terminals, and the wires from the right channel loudspeaker to the Right + & - terminals. In each case, the red terminal is the positive output and the black terminal is the negative output.

Care should be taken to ensure no stray strands of wire short the speaker outputs together. Please ensure that the loudspeaker terminals have been tightened completely to provide a good electrical connection. It is possible for the sound quality to be affected if the screw terminals are loose.

7. SUB OUT

Connect to the input on an active subwoofer if required.

8. PRE-OUT

For connection to the unbalanced inputs of a power amplifier or active subwoofer.

9. BLUETOOTH ANTENNA

Used for wireless streaming bluetooth audio capability directly from most phones, tablets and laptops. See later section for details

10. ANALOGUE INPUTS (A1 UNBALANCED, A2, A3 AND A4)

These inputs are suitable for any 'line level' source equipment such as CD players, DAB or FM/AM tuners etc.

Note: These inputs are for analogue audio signals only. They should not be connected to the digital output of a CD player or any other digital device.

11. USB INTERFACE

A USB B type socket is fitted to the CXA to enable the playback of audio from a personal computer running either Microsoft Windows or Apple Mac OS X operating systems. Some builds of Linux are also suitable.

Note: Always use a high quality USB connection cable certified as USB Hi-Speed. USB cable connections longer than 3m may result in inconsistent audio performance.

> Always turn the volume to minimum, switch to another input or turn the CXA off before plugging/unplugging cables to the USB input or whilst booting up/shutting down your PC/Mac.

GROUND/LIFT SWITCH

The Ground/Lift switch enables the USB interface earth to be disconnected from the CXA chassis earth. Disconnecting (lifting) the earth can be useful if electronic hum is heard through the speakers when the USB input is selected. The switch should otherwise be left in the Ground position.

12. DIGITAL INPUTS (D1, D2 AND D3)

TOSLINK and S/P DIF co-axial digital inputs.

Coaxial – Use a high quality 75 ohm digital RCA Phono interconnect cable (not one designed for normal audio use). This input is suitable for 16-24 bit content up to 192kHz.

TOSLINK Optical – Use a high quality TOSLINK fibre optic interconnect cable designed specifically for audio use. This input is suitable for 16-24 bit content up to 96kHz (TOSLINK is not recommended at 192kHz sampling rates).

Note: To obtain the best results from your system we recommend using only high quality Cambridge Audio interconnects. This will ensure that you hear your system as we designed it. Please ask you dealer for details.

13. A1 INPUTS

Note: Balanced (XLR) is available on the CXA81 only.

A1 inputs feature either unbalanced (phono/RCA) or balanced (XLR) connections. The balanced connection is the higher quality option and can reject noise and interference in the cable when used with other equipment that supports this function. An XLR connector is wired Pin 1 - Ground; Pin 2 - Hot (in-phase); Pin 3 - Cold (phase-inverted).

Front panel controls

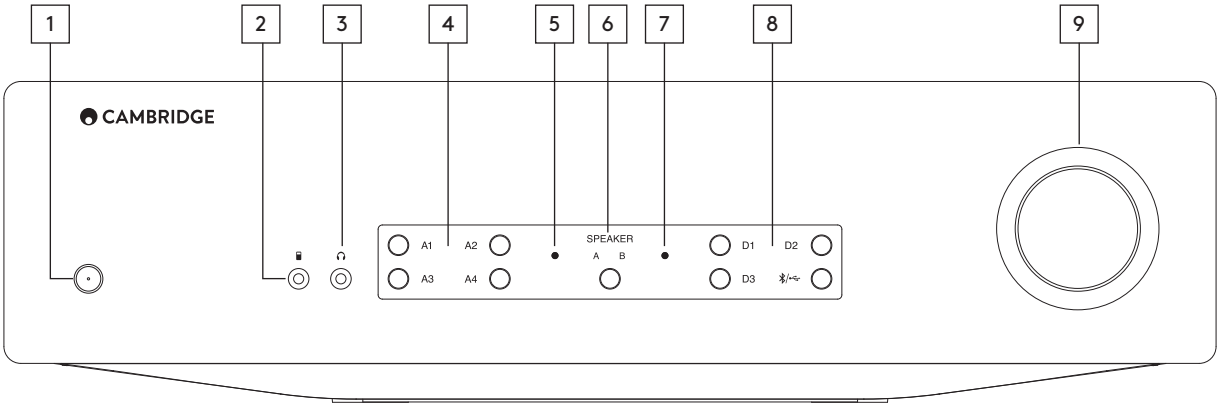

Note: Selected sources and functions are represented by a Blue light. CXA81 has additional Orange lights for Balanced and USB Audio inputs. CXA61 has an Orange light for USB Audio and MP3 inputs.

1. STANDBY/ON

Switches the unit between Standby mode (indicated by dim power LED) and On (indicated by bright power LED). Standby mode is a low power mode where the power consumption is less than 0.5 Watts. The unit should be left in Standby mode when not in use.

This product has APD (Auto Power Down) enabled as default. After inactivity of 20 minutes, the product will automatically switch to Standby. See the 'Setup menu' section for further details.

2. MP3 INPUT (CXA61 ONLY)

This source input allows you to connect a portable audio device such as an MP3 player directly into the front of the unit using the 3.5mm stereo-jack.

Notes: Plugging in a device into the front panel automatically selects the MP3 input, any other input can still be selected once this has been done. The MP3 input can only be selected when an MP3 jack is inserted.

3. HEADPHONES

Allows for the connection of stereo headphones with a 3.5mm jack plug. Headphones with an impedance of between 8 and 600 ohms are recommended.

Note: Plugging in headphones will automatically mute the loudspeaker, pre-out, and sub outputs.

4. ANALOGUE SOURCE SELECT BUTTONS

Push the appropriate input selection button to select the source that you wish to listen to.

Notes:

- On the CXA61 with an MP3 jack inserted, pressing the A4 input selection button will toggle between A4 and MP3.
- On the CXA81, pressing the A1 input selection button will toggle between balance and unbalanced

5. PROTECTION INDICATOR

See the 'CAP5' section for further details.

6. SPEAKER A/B

Press to scroll through the speaker sets connected to the loudspeaker terminals on the back panel (speaker sets A, B or A and B). This can be used for listening to an extra set of loudspeakers in another room. See the 'Connections' section for further details.

7. MUTE INDICATOR

The light will flash to show the outputs are muted.

8. DIGITAL SOURCE SELECT BUTTONS

Push the appropriate input selection button to select the source that you wish to listen to.

Note: Pressing the Bluetooth/USB button repeatedly will toggle between the two inputs.

9. VOLUME

Use to increase/decrease the level of the sound from the outputs of the amplifier. This control affects the level of all outputs.

Remote control

The CXA is supplied with a remote control handset that duplicates the front panel control functions and is also able to control other CX series products. The supplied AAA batteries must be fitted before the remote control can be used.

The handset buttons function as described below:

1. BRIGHTNESS

Alters the brightness of the CXA display lights. There are two brightness levels and an option to switch off the backlight.

Note: When the CXA display lights are selected to be off, selecting any of the functions will briefly switch on the lights to show the change.

2. MUTE

Press to mute or unmute the loudspeakers, pre-out, sub, and the headphone outputs. The light will flash on the front of the unit to show the outputs are muted.

3. STANDBY/ON

Switches the CXA between On and Standby mode.

4. SOURCES

Used to select the source inputs.

Note: For the CXA81, the A1 button has the double function of selecting the balanced or unbalanced A1 input, and will toggle between the two inputs when double pressing. The MP3 source can only be selected when there is a jack connected to the input.

5. VOLUME UP/DOWN

Volume level adjustment.

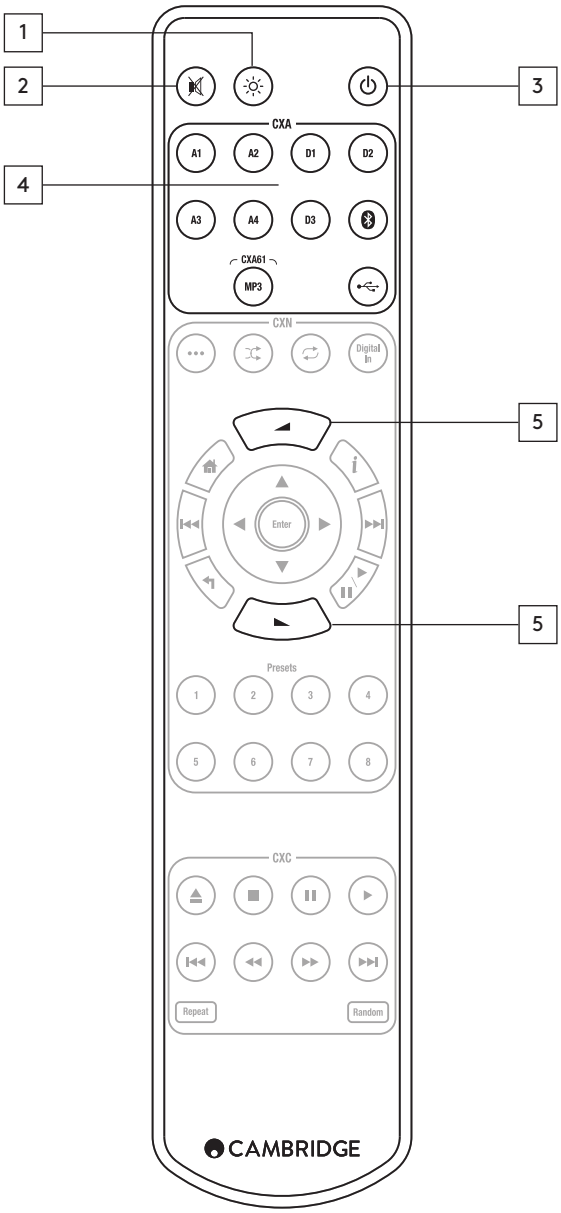

Connections

When designing our amplifiers we include features that allow you to connect your system in various ways. The inclusion of features such as Pre-Out and Speaker B connections mean that you can flexibly configure your system depending on your requirements.

Important Note: When using a banana plug, make sure the speaker terminals are completely tightened before inserting the plug.

BASIC CONNECTIONS

The diagram below shows the basic connection of your amplifier to a CD player using the D3 coaxial digital input source and a pair of loudspeakers.

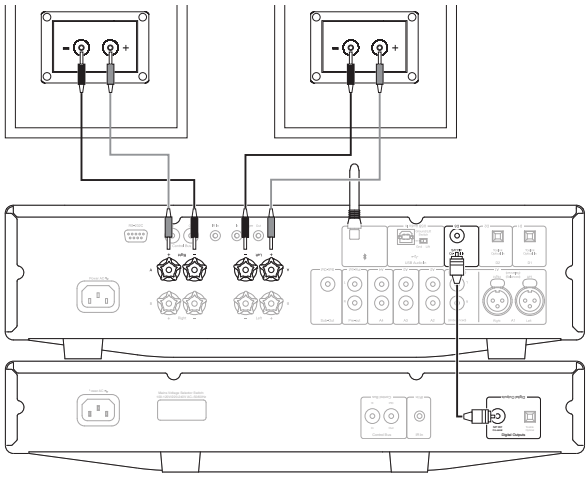

SPEAKER B CONNECTIONS

The Speaker B connections on the back of the amplifier allow for a second set of speakers to be used (i.e. speakers located in another room). The Speaker A/B button on the front panel scrolls through the selection of speaker A only, speaker B only, and speaker A and B together.

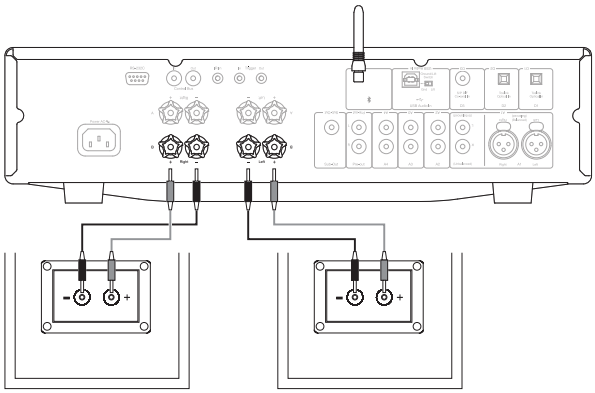

PREAMP OUT CONNECTIONS

The Preamp Out sockets are for connecting to the input sockets of a power amplifier or active subwoofer. The diagram below shows how to connect the amplifier to an active subwoofer via the Line In inputs on the subwoofer.

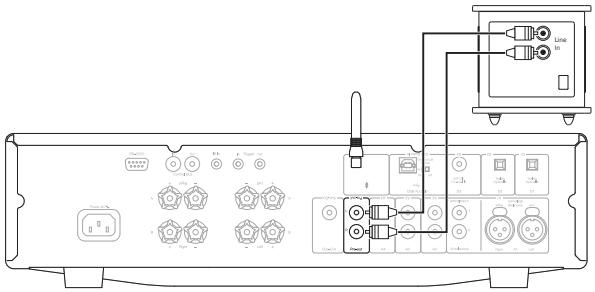

BALANCED AUDIO CONNECTIONS (CXA81 ONLY)

The diagram below shows how to connect the CXA81 to the CXN Network player using the Balanced Audio inputs via three pin XLR connectors. The CXA81 can also be connected to non-Cambridge Audio sources with balanced outputs.

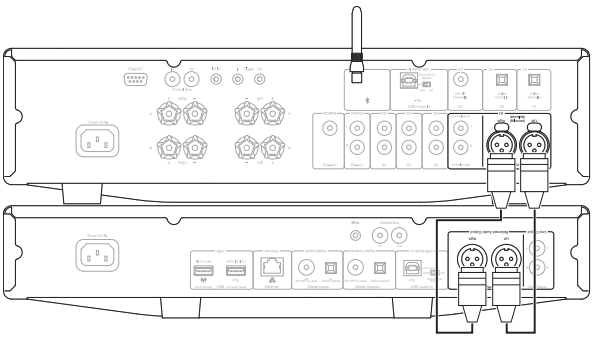

Balanced connections in an audio system are designed to reject electrical noise, from power wiring etc, and also the effects of noise currents flowing through ground connections. The basic principle of balanced interconnection is to get the signal you want by subtraction, using a three-wire connection. One signal wire (the hot or in-phase) carries the normal signal, while other (the cold or phase-inverted) carries an inverted version. The balanced input senses the difference between the two lines to give the wanted signal. Any noise voltages that appear identically on both lines (these are called common-mode signals) are cancelled by the subtraction.

The CXA81 is designed to work at its highest performance when a balanced interconnect is used.

Note: To select the balanced input on the CXA81, press the A1 button twice on the front panel or on the remote control so that the A1 light on the front panel display lights up Orange. Repeatedly pressing the A1 button will toggle between balanced and unbalanced inputs.

USB AUDIO CONNECTION

The CXA USB input enables the playback of audio files or streamed programme from Microsoft Windows or Apple Mac OS X personal computers (and some Linux builds). When connected via USB the personal computer will identify the CXA as an audio device. Specifying the CXA in the computer's audio control panel will enable it to play audio data either stored locally on the computer or streamed to the computer via a network or the internet.

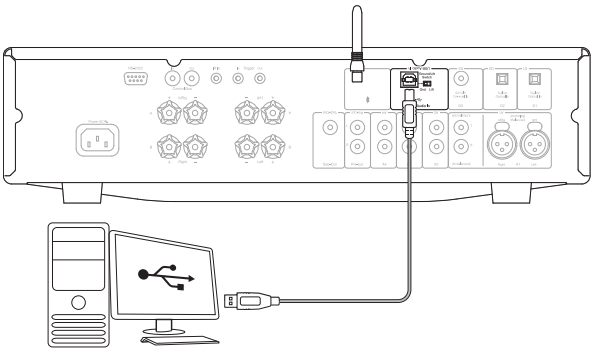

Always turn the volume to minimum, switch to another input or turn the CXA off before plugging/unplugging cables to the USB input or whilst booting up/shutting down your PC/Mac.

Note: Always use a high quality USB connection cable certified as USB Hi- Speed. USB cable connections longer than 3m may result in inconsistent audio performance.

ADVANCED USB AUDIO

The CXA is both USB 2.0 (Hi-Speed) and USB 1.1 (Full-speed) USB port compatible.

It should also work with the new USB 3.0 ports where the PC will simply treat the CXA as if it were a USB 2.0 or 1.1 device.

The CXA supports two USB Audio protocols (not the same as the port types themselves) USB Audio Class 1 (which works over USB 1.1 ports and supports up to 24-bit/96kHz) or USB Audio Class 2 (which requires a USB 2.0 port and can support up to 32-bit/384kHz).

The default configuration is USB Audio Class 2.

See our online guide at **www.cambridgeaudio.com/USB-Audio** on USB Audio for more details. With careful choice of playback software and settings many pitfalls can be avoided.

Windows based PC's required a Cambridge Audio USB driver to be installed before connection.

USB mode can be selected in the Setup menu. See 'Setup' section.

A brief explanation of your choices are below:

USE WITH PCS

With the CXA switched to USB Audio Class 1 the CXA will work with the native Windows XP, Vista, 7, or 8 Audio 1.0 driver (no need to load any new driver) and accept audio up to 24-bit/96kHz.

With the CXA switched to USB Audio Class 2 the CXA needs the Cambridge Audio USB Audio 2.0 Driver to be loaded and can then accept up to 32-bit/384kHz.

The driver is available from **www.cambridgeaudio.com/USB-Audio**.

USE WITH MACS

No extra drivers are required. With the CXA switched to USB Audio 1.0 the CXA will work with the native Mac OS-X 10.5 (Leopard) or above Audio 1.0 driver and accept audio up to 24-bit/96kHz.

With the CXA switched to USB Audio Class 2 the CXA works with the native Mac OS-X 10.5 (Leopard) or above Audio 2.0 driver and can accept audio up to 32-bit/384kHz.

USE WITH LINUX

For most builds of Linux with the CXA switched to USB Audio Class 1 the CXA will work with the native Audio 1.0 driver and accept audio up to 24-bit/96kHz.

Some very new builds of Linux are now supporting USB Audio Class 2 for which the CXA should be switched to Audio 2.0 to accept audio up to 32-bit/384kHz.

For both cases because Linux builds vary according to their creators choice of software components including drivers it is not possible to guarantee operation and Audio drivers may need to be loaded.

'Class drivers' as they are called for generic support of Audio Class 1.0 or Audio Class 2.0 devices may be available from the Linux community, we do not supply these.

Bluetooth

BLUETOOTH AUDIO STREAMING

Selecting this allows the CXA to receive wireless Bluetooth audio from most phones, tablets and laptops.

PAIRING

To begin streaming high quality music from your chosen media source it will first need to be paired with the CXA.

Note: Your device can only be paired and connected to the CXA while the Bluetooth source is selected.

Setup menu

To enter the Setup menu, put the CXA in standby mode, whilst on Standby mode, press and hold the Speaker A/B button until the A/B lights flash alternatively and the sources A1-A4 light up. See below source buttons for setup configuration:

Note: Button selected is represented by Blue light.

AUTO POWER DOWN (APD)

A1 off – Disables the APD (Auto power down) function.

A1 on – Sets the APD time to 20 minutes.

Note: Auto power down is a power down function that automatically switches the CXA into standby mode if there is no audio. The APD time represents the amount of time required for there to be no audio before the CXA is automatically put into the standby mode.

CLIPPING FUNCTION

A3 on – Clipping function enabled. The volume nudges down if signal clipping is detected.

A3 off – Clipping function is disabled.

USB MODE

A4 on – Puts the CXA in USB Audio Class 2 mode.

A4 off – Puts the CXA in USB Audio Class 1 mode.

Notes:

- To save the setup settings and exit the setup menu, press the Speaker A/B button.
- Pressing the Standby/On button while in the setup menu will exit this setup menu and will not save the setup settings.

Control Bus

The Control Bus allows any compatible Cambridge products to synchronise when powering up the units. See the following diagrams when connecting the CXA using the provided Control Bus cable.

Another added feature with this Control Bus is the use of the Cambridge Connect app. You can use the Cambridge Connect app to control the CXA via the CXN.

CAMBRIDGE CONNECT APP (VIA CXN)

When using the app to turn the CXN on/off, this will also turn the CXA on/off. The app can also be used to control the volume of the CXA. Connect the CXN control bus out to CXA in. For more information, see the CXN manual.

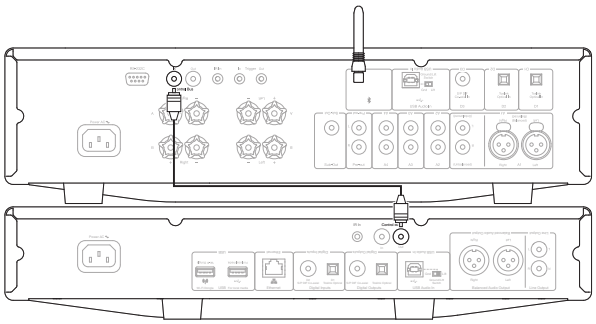

CXA WITH CXC

When turning the CXA on/off, this will also turn the CXC on/off. Connect the CXA control bus out to CXC in.

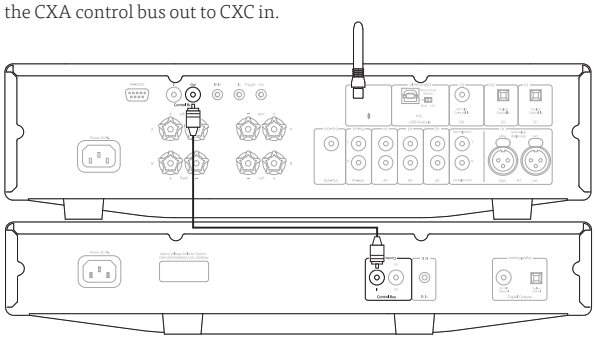

CXA WITH CXN

Note: Without using the Cambridge Connect app to control the CXA.

When turning the CXA on/off, this will also turn the CXN on/off. Connect the CXA control bus out to CXN in.

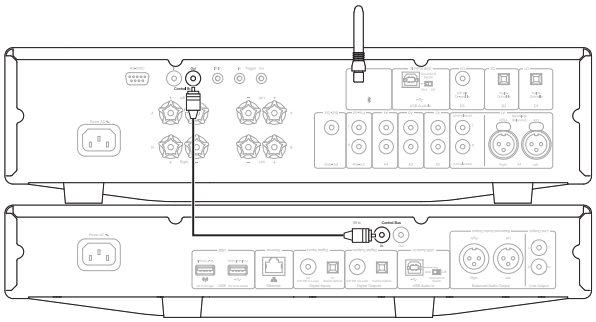

CXA WITH CXN AND CXC

Using the CXA as the primary power controller, see the diagram below. When turning the CXA on/off, this will also turn the CXN and CXC on/off.

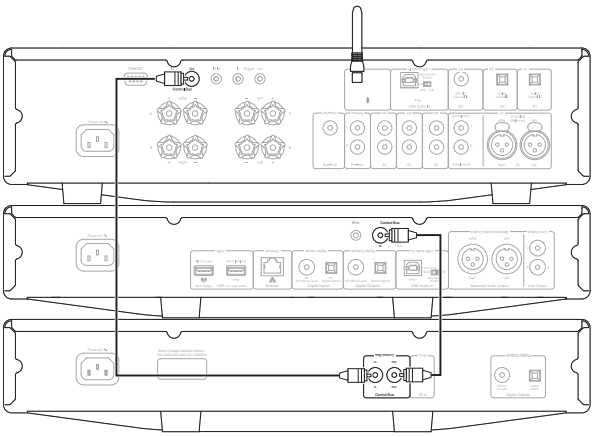

Adding an additional connection from CXN to CXA will enable the use of the Cambridge Connect app function.

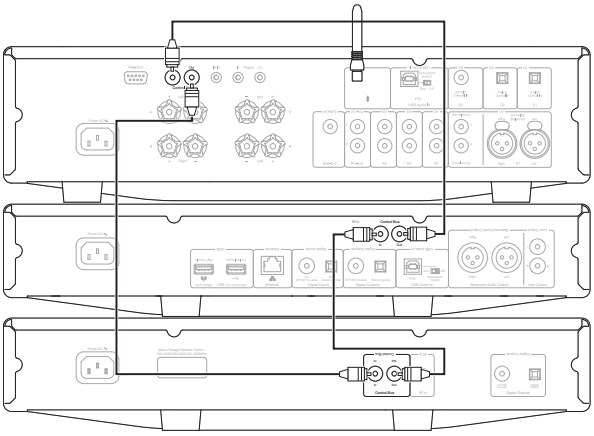

CAP5 - Five way protection system

Cambridge Audio has developed a proprietary protection system to ensure reliability and a long life for its amplifiers and the speakers they are connected to. This protection system comprises of five main protection methods:

1. DC DETECTION ☀

Indication - Unit has switched off during operation. The front panel LED light flashes together in the following sequence, one flash with long pause between flashes. Read below for more information.

Description - CAP5 offers loudspeaker protection if the output of the amplifier goes to a high constant voltage (DC) because of some internal fault. This is a rare fault although detecting it could just save those expensive loudspeakers.

Remedy - Due to the necessary sensitivity of the DC protection circuit, extremely hard clipping of the amplifier may cause DC protection to be triggered. If this fault occurs, please contact your dealer for service.

2. OVER TEMPERATURE DETECTION ☀ ☀

Indication - Unit has switched off during operation. The front panel LED light flashes together in the following sequence, two quick flashes with long pause between flashes. Read below for more information.

Description - Over temperature is caused by a combination of high listening levels and low impedance speakers. CAP5 includes temperature detection which constantly monitors the heat generated by the output transistors. If the monitored temperature reaches a high level (suitably within the limits of the output devices) the amplifier will automatically switch into a fault mode. The unit should ideally be left for 15 minutes in this state to cool down adequately. If the unit has not fully cooled down then the temperature may reach the limit soon after the amplifier is powered up. If the loudspeaker impedance is low the temperature of the amplifier may rise faster as the amplifier is working harder. If the amplifier is mounted in a cabinet or the ventilation slots are obstructed the over temperature detection may activate/reactivate after a short listening time.

Remedy - The internal temperature of the output transistors has reached the over temperature limit. Leave the unit for 15 minutes to cool down before pressing the Standby button to resume normal operation.

3. OVERVOLTAGE/OVERCURRENT DETECTION ☀ ☀ ☀

Indication - Unit has switched off during operation. The front panel LED light flashes together in the following sequence, three quick flashes with long pause between flashes. Read below for more information.

Description - CAP5 offers V/I (voltage/current) protection by constantly monitoring the output transistors to keep them working inside their Safe Operating Area (SOA). The SOA is a set of limits given by the output transistor manufacturer to ensure reliability. The V/I protection has been incorporated within the amplifier circuitry to provide a fast response to temporary overload conditions. When the V/I protection is triggered the unit will continue to operate but distortion may be heard as the unit protects the output transistors.

Remedy - Reduce the volume. If distortion is still present, check the speaker connections and ratings.

4. SHORT CIRCUIT DETECTION ☀ ☀ ☀ ☀

Indication - Unit has switched off during power up. The front panel LED light flashes together in the following sequence, four quick flashes with long pause between flashes. Read below for more information.

Description - During power up from Standby CAP5 performs a check on the loudspeaker terminals to see if a short across the terminals has been accidentally introduced. If the resistance measured across the loudspeaker terminals is too low the unit will stay in Standby mode until the fault has been removed and Power up is re-attempted.

Remedy - There may be a short circuit between the loudspeaker terminals. Check all loudspeaker connections before attempting to switch the unit out of Standby.

5. INTELLIGENT CLIPPING DETECTION

Indication - Volume is reduced automatically.

Description - CAP5 has the ability to detect when the amplifier starts to clip or overdrive at its output, which can damage loudspeakers, and degrade the sound. Clipping distortion is caused at high volume levels when the output signal attempts to go outside the maximum voltage that the amplifier can provide, causing the tops of the signal to flatten off.

When CAP5 detects clipping the volume will be automatically reduced down until CAP5 detects an undistorted output.

Note: The clipping detection is disabled by default. The clipping detection can be enabled in the Setup menu (see 'Setup menu' section).

Troubleshooting

THERE IS NO POWER

Ensure the AC power cord is connected securely.

Ensure the plug is fully inserted into the wall socket and is switched on.

Check fuse in the mains plug or adaptor.

THERE IS NO SOUND

Make sure the unit is not in Standby mode.

Check that source component is properly connected.

Check that your speakers are properly connected.

Make sure the selected speaker A/B light corresponds to the speaker terminals that the loudspeakers are connected to.

Make sure unit is not in mute mode.

THERE IS NO SOUND ON ONE CHANNEL

Ensure that balance control is in the correct position.

Check speaker connections.

Check interconnects.

THERE IS A LOUD BUZZ OR HUM

Check turntable or tone arm for ground and connection lead fault.

Ensure no interconnects are loose or defective.

Ensure that your turntable is not too close to the amplifier.

THERE IS WEAK BASS OR DIFFUSED STEREO IMAGING

Ensure that speakers are not wired out of phase.

SPEAKER A/B AND MUTE LIGHT FLASHING

See section on CAP5 protection system.

THE REMOTE HANDSET DOES NOT FUNCTION

Check that the batteries have not expired.

Ensure that nothing is blocking the remote sensor.

For more frequently asked questions (FAQ's), technical advice and information on getting the most out of your CXA, please visit the Support section on Cambridge Audio's website:

www.cambridgeaudio.com/support

For all servicing, in or out of warranty, please contact your dealer.

Technical specifications

CONTINUOUS POWER OUTPUT	**CXA81**: 80W RMS into 8 Ohms, 120W RMS into 4 Ohms **CXA61**: 60W RMS into 8 Ohms, 90W RMS into 4 Ohms
THD (UNWEIGHTED)	<0.002% 1kHz at 80% of rated power <0.02% 20Hz – 20kHz at 80% of rated power
FREQUENCY RESPONSE	<5Hz – 60kHz +/-1dB
S/N RATIO (REF 1W INTO 8 OHM)	>93 dB
S/N RATIO (REF FULL POWER)	>105 dB
INPUT SENSITIVITY	Input A1-A4 (unbalanced) 370mV RMS
INPUT IMPEDANCES	**CXA81**: Input A1 (balanced) 50 kOhm Input A1-A4 (unbalanced) 43 kOhm
INPUTS	**CXA81**: Balanced and Unbalanced MP3 jack (CXA61), Coax SPDIF, TOSLINK, Bluetooth, USB Audio
OUTPUTS	Speakers, Headphone, Preamplifier Output, Sub Output
POWER AMP DAMPING FACTOR	>110 at 1kHz
USB AUDIO INPUT	USB Type B conforming to USB Audio Class 1 or USB Audio Class 2 (user selectable)
BLUETOOTH	4.2 A2DP/AVRCP supporting SBC, aptX and aptX HD codecs
COMPATIBILITY	USB Audio Class 1: Up to 24-bit 96kHz (asynchronous) USB Audio Class 2: Up to 32 bit 384kHz (asynchronous) and up to DSD-256 TOSLINK: 16/24-bit 32-96kHz Coax SPDIF: 16/24-bit 32-192kHz
MAX POWER CONSUMPTION	**CXA81**: 750W **CXA61**: 600W
STANDBY POWER CONSUMPTION	<0.5W
DIMENSIONS	115 x 430 x 341mm (4.5 x 16.9 x 13.4”)
WEIGHT	8.7kg (19.1Lbs)

CAMBRIDGE AUDIO

WWW.CAMBRIDGEAUDIO.COM

Gallery Court, Hankey Place
London
SE1 4BB
United Kingdom

Cambridge Audio is a brand of Audio Partnership Plc.
Registered in England No. 2953313

APxxxxx/1