NUMA 319-BT82600 Bluetooth module

Bluetooth Module User Guide

Release Record

Version Number	Release Date	Comments
Revision 1.0	2014-11-5	First Release
Revision 1.1	2015-09-09	
Revision 1.2	2016-03-24	1, Modified BT Status for 33 pin, 2, Modify the application circuit diagram.
Revision 1.3	2016-04-16	1, Modify the Pin 9 ,10 , 14, 16 , 17,28,31 function definition. 2, Modify the application circuit diagram. 3, This version of the specification is applicable to V1.2 version of the PCB.
Revision 1.4	2016-08-06	1, PIN27 Alternative Function :BT Power Mode 2, Modify the application circuit diagram.

FEDERAL COMMUNICATIONS COMMISSION INTERFERENCE STATEMENT

This equipment has been tested and found to comply with the limits for a Class B digital device, pursuant to part 15 of the FCC Rules. These limits are designed to provide reasonable protection against harmful interference in a residential installation. This equipment generates, uses and can radiate radio frequency energy and, if not installed and used in accordance with the instructions, may cause harmful interference to radio communications. However, there is no guarantee that interference will not occur in a particular installation. If this equipment does cause harmful interference to radio or television reception, which can be determined by turning the equipment off and on, the user is encouraged to try to correct the interference by one or more of the following measures:

-Reorient or relocate the receiving antenna.

-Increase the separation between the equipment and receiver.

-Connect the equipment into an outlet on a circuit different from that to which the receiver is connected.

-Consult the dealer or an experienced radio/ TV technician for help.

CAUTION:

Any changes or modifications not expressly approved by the grantee of this device could void the user's authority to operate the equipment.

This device complies with Part 15 of the FCC Rules. Operation is subject to the following two conditions:

(1) this device may not cause harmful interference, and

(2) this device must accept any interference received, including interference that may cause undesired operation.

RF exposure warning

This equipment must be installed and operated in accordance with provided instructions and the antenna(s) used for this transmitter must be installed to provide a separation distance of at least 20 cm from all persons and must not be co-located or operating in conjunction with any other antenna or transmitter. End-users and installers must be provide with antenna installation instructions and transmitter operating conditions for satisfying RF exposure compliance.

End Product Labeling

This transmitter module is authorized only for use in device where the antenna may be installed such that 20cm may be maintained between the antenna and users. The final end product must be labeled in a visible area with the following: "**Contains FCC ID: YKH319-BT82600** "

Information for the OEMs and Integrators

The following statement must be included with all versions of this document supplied to an OEM or integrator, but should not be distributed to the end user.

1) This device is intended for OEM integrators only.

2) Please see the full Grant of Equipment document for other restrictions.

Note: For YKH319-BT82600, it supports Bluetooth V3.0, V2.1+EDR mode only without BLE function.

1.2 Feature

- Postage stamp sized form factor.
- Low power.
- Class 1.5 support(high output power)
- The default UART Baud rate is 115.2Kbps and can support from 1200bps up to 921Kbps,.
- UART, I^2C,PCM / I^2S data connection interfaces.
- Support the OTA upgrade.
- Bluetooth stack profiles support: SPP, HID, MAP, and all BLE protocols.

1.3 Application

- Smart Watch and Bluetooth Bracelet
- Health & Medical devices
- Wireless POS
- Measurement and monitoring systems
- Industrial sensors and controls
- Asset Tracking

2. GENERAL SPECIFICATION

General Specification	
Chipset	Realtek RTL8761
Product	FSC-BT826
Dimension	13mm x 26.9mm x 2mm
Bluetooth Specification	Bluetooth V4.0 (Dual Mode)
Power Supply	3.3 Volt DC
Sensitivity	-82dBm@0.1%BER
Frequency Band	2.402GHz -2.480GHz ISM band
Modulation	FHSS,GFSK,DPSK,DQPSK
Baseband Crystal OSC	40MHz
Hopping & channels	1600hops/sec, 1MHz channel space,79 Channels(BT 4.0 to 2MHz channel space)
RF Input Impedance	50 ohms
Antenna	Integrated chip antenna
Interface	Data: UART, I^2C, PCM / I^2S
Profile	SPP, GATT(BLE Standard) MFI,Airsync,ANCS, iBeacon, MAP(optional),OTA(optional)
Temperature	-20ºC to +70 ºC
Humidity	10%~95% Non-Condensing
Environmental	RoHS Compliant

Table 1

3. PHYSICAL CHARACTERISTIC

FSC-BT826 dimension is 26.9mm(L)x13mm(W)x2mm(H).

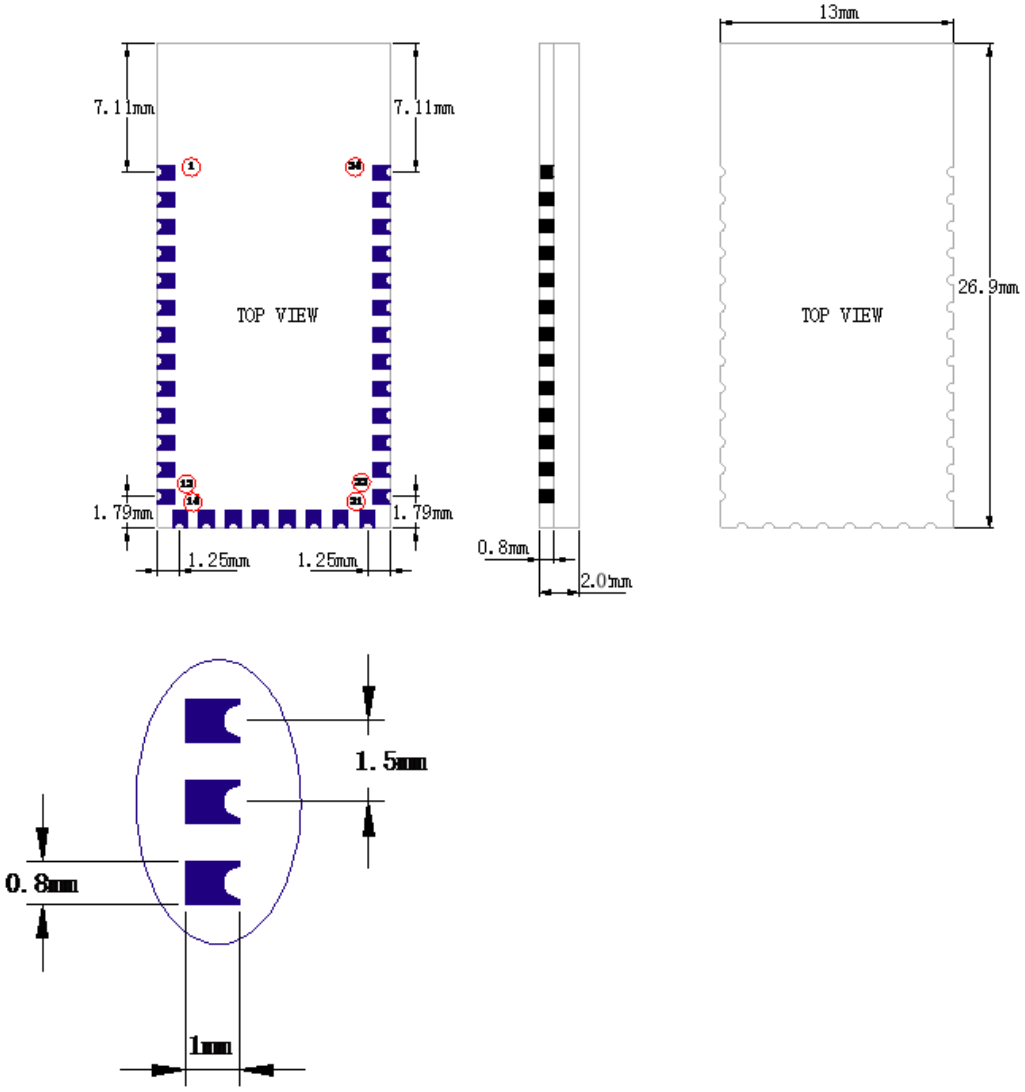

Figure 2：Package Dimensions（TOP VIEW）

4. PIN DEFINITION DESCRIPTIONS

* **Special tips:** PIO0,PIO1,PIO2,PIO3 I/O port for reuse.

When using the OTA function upgrade (air), please send the I/O mouth dangling;

If the I/O port to connect the MCU,

then set the MCU I/O ports for the input port or high impedance state.

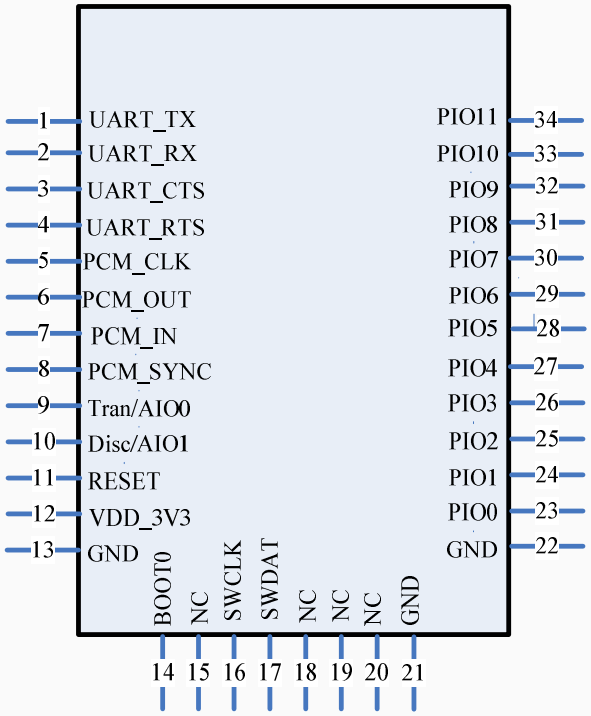

Figure 3: PIN description

Pin	Pin Name	Pad Type	Description
1	UART_TX	CMOS output	UART data output
2	UART_RX	CMOS input	UART data input
3	UART_CTS	CMOS input	UART clear to send active low Alternative Function: Programmable input/output line
4	UART_RTS	CMOS output	UART request to send active low Alternative Function: Programmable input/output line
5	PCM_CLK	Bi-directional	Synchronous data clock
6	PCM_OUT	CMOS Output	Synchronous data output
7	PCM_IN	CMOS Input	Synchronous data input

8	PCM_SYNC	Bi-directional	Synchronous data Sync
9	Tran/AIO0	I/O	Host MCU change UART transmission mode. (Default) If current UART transmission mode is command mode, one low pulse with 80ms duration low signal will change UART transmission mode to throughput mode, and another low pulse could change UART transmission mode back to command mode. Otherwise it will be set as high always. Alternative Function: Analogue programmable I/O line.
10	Disc/AIO1	I/O	Host MCU disconnect bluetooth. (Default) One low pulse with 80ms duration low signal to trigger bl uetooth disconnection.Otherwise it will be set as high alw ays. Alternative Function: Analogue programmable I/O line.
11	RESET	CMOS input	Reset if low. Input debounced so must be low for >5ms to cause a reset.
12	VDD_3V3	VDD	Power supply voltage 3.3V
13	GND	VSS	Power Ground
14	BOOT0	Bi-directional	The default is low. (internal 10K resistance drop) When writing to MCU when using the serial port, this pin is connected with the high level.
15	NC	NC	NC
16	SWCLK	Bi-directional	Debugging through the clk line(Default)
17	SWDIO	Bi-directional	Debugging through the data line(Default)
18	NC	NC	NC
19	NC	NC	NC
20	NC	NC	NC
21	GND	VSS	Power Ground
22	GND	VSS	Power Ground
23	**PIO0**	I/O	Programmable input/output line *** The I/O port for reuse.**
24	**PIO1**	I/O	Programmable input/output line *** The I/O port for reuse.**
25	**PIO2**	I/O	Programmable input/output line *** The I/O port for reuse.**

26	**PIO3**	I/O	Programmable input/output line *** The I/O port for reuse.**
27	PIO4	I/O	Programmable input/output line Alternative Function: BT Power Mode, low level in run mode, it will be set to high level when fall asleep.
28	**PIO5**	I/O	***With the use of the Pin 9.***
29	PIO6	I/O	Programmable input/output line Alternative Function: I^2C CLK line (Default)
30	PIO7	I/O	Programmable input/output line Alternative Function: I^2C DATA line (Default)
31	**PIO8**	I/O	***With the use of the Pin 10.***
32	PIO9	I/O	Programmable input/output line Alternative Function: LED(Default)
33	PIO10	I/O	Programmable input/output line Alternative Function: BT Status(Default)
34	PIO11	I/O	Programmable input/output line

Table 2

5. Interface Characteristics

5.1 UART Interface

Four signals are used to implement the UART function. When FSC-BT826 is connected to another digital device, UART_RX and UART_TX transfer data between the two devices. The remaining two signals, UART_CTS and UART_RTS, can be used to implement RS232 hardware flow control where both are active low indicators.

The interface consists of four-line connection as described in below:

Signal name	Driving source	Description
UART-TX	FSC-BT826 module	Data from FSC-BT826 module
UART-RX	Host	Data from Host
UART-RTS	FSC-BT826 module	Request to send output of FSC-BT826 module
UART-CTS	Host	Clear to send input of FSC-BT826 module

Table 3

Default Data Format

Property	Possible Values
BCSP-Specific Hardware	Enable
Baud Rate	115. 2 Kbps
Flow Control	None
Data bit length	8bit
Parity	None
Number of Stop Bits	1

Table 4

5.2 I^2C Interface

- Up to two I^2C bus interfaces can support both master and slave mode with a frequency up to 400KHZ.
- Provide arbitration function, optional PEC(packet error checking) generation and checking.
- Supports 7 –bit and 10 –bit addressing mode and general call addressing mode.

The I^2C interface is an internal circuit allowing communication with an external I^2C interface which is an industry standard two line serial interface used for connection to external hardware. These two serial lines are known as a serial data line (SDA) and a serial clock line (SCL). The I^2C module provides two data transfer rates: 100 kHz of standard mode or 400kHz of the fast mode. The I^2C module also has an arbitration detect function to prevent the situation where more than one master attempts to transmit data to the I^2C bus at the same time. A CRC-8 calculator is also provided in I^2C interface to perform packet error checking for I^2C data.

5.3 Analog to digital converter (ADC)

- 12-bit SAR ADC engine with up to 1 MSPS conversion rate
- Conversion range: VSSA to VDDA (2.6 to 3.6 V)
- Temperature sensor

One 12-bit 1 μs multi-channel ADC is integrated in the device.
The conversion range is between 2.6 V < VDDA < 3.6 V. An analog watchdog block can be used to detect the channels, which are required to remain within a specific threshold window.
A configurable channel management block of analog inputs also can be used to perform conversions in single, continuous, scan or discontinuous mode to support more advanced usages. The ADC can be triggered from the events generated by the general-purpose timers (TMx) and the advanced-control timers (TM1) with internal connection.
The temperature sensor can be used to generate a voltage that varies linearly with temperature. Each device is factory-calibrated to improve the accuracy and the calibration data are stored in the system memory area.

5.4 PCM Interface Characteristics

The FSC-BT826 supports a PCM digital audio interface that is used for transmitting digital audio/voice data to/from the Audio Codec. Features are supported as below

- Supports Master and Slave mode
- Programmable long/short Frame Sync
- Supports 8-bit A-law/μ-law, and 13/16-bit linear PCM formats
- Supports sign-extension and zero-padding for 8-bit and 13-bit samples
- Supports padding of Audio Gain to 13-bit samples
- PCM Master Clock Output: 64, 128, 256, or 512kHz
- Supports SCO/ESCO link

5.4.1 PCM Format

FrameSync is the synchronizing function used to control the transfer of DAC_Data and ADC_Data. A Long FrameSync indicates the start of ADC_Data at the rising edge of FrameSync (Figure 3), and a Short FrameSync indicates the start of ADC_Data at the falling edge of FrameSync (Figure 4).

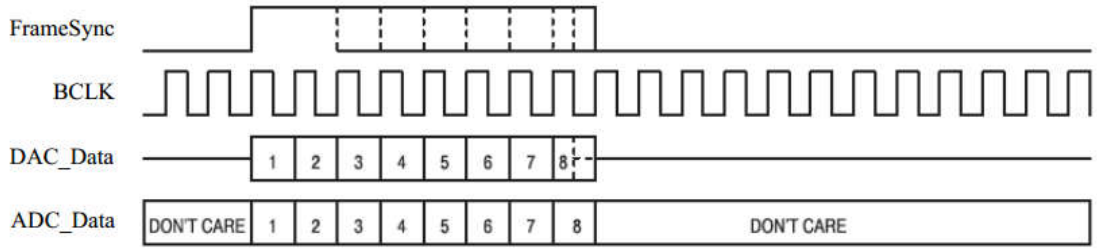

Figure 4: Long FrameSync

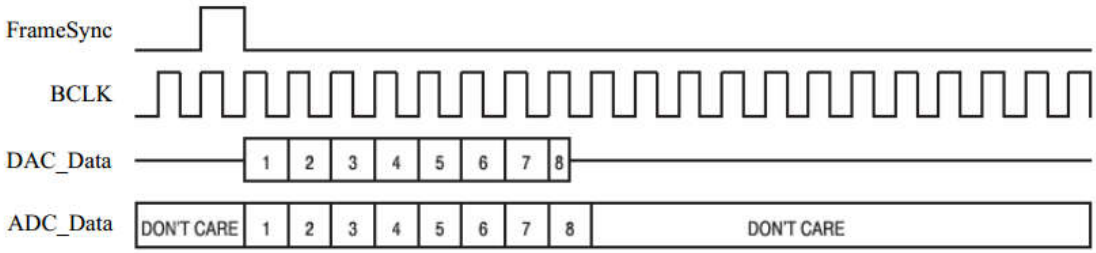

Figure 5: Short FrameSync

5.4.2 Sign Extension and Zero Padding for 8-Bit and 13-Bit Samples

For 16-bit linear PCM output, 3 or 8 unused bits may be sign extended/zero padded.

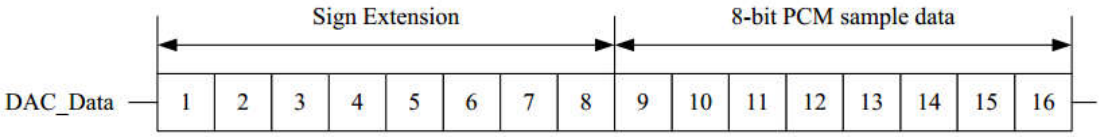

Figure 6: 16-Bit Output Data with 8-Bit PCM Sample Data and Sign Extension

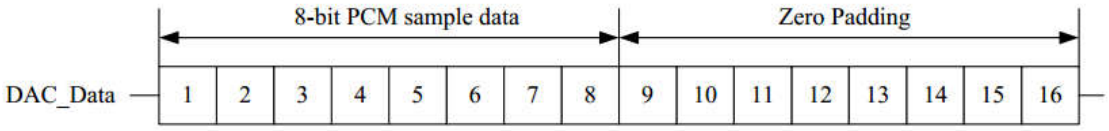

Figure 7：16-Bit Output Data with 8-Bit PCM Sample Data and Zero Padding

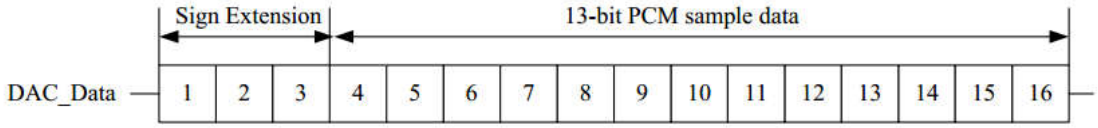

Figure 8：16-Bit Output Data with 13-Bit PCM Sample Data and Sign Extension

For 16-bit linear PCM output, 3-bit programmable audio gain value can be padded to 13-bit sample data.

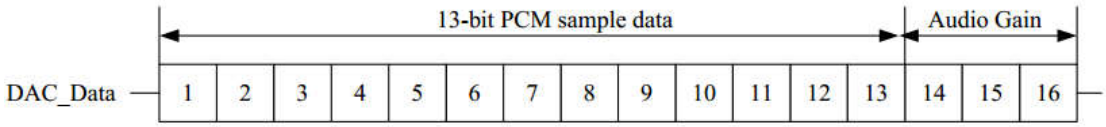

Figure 9：16-Bit Output Data with 13-Bit PCM Sample Data and Audio Gain

5.4.3 PCM Interface Timing

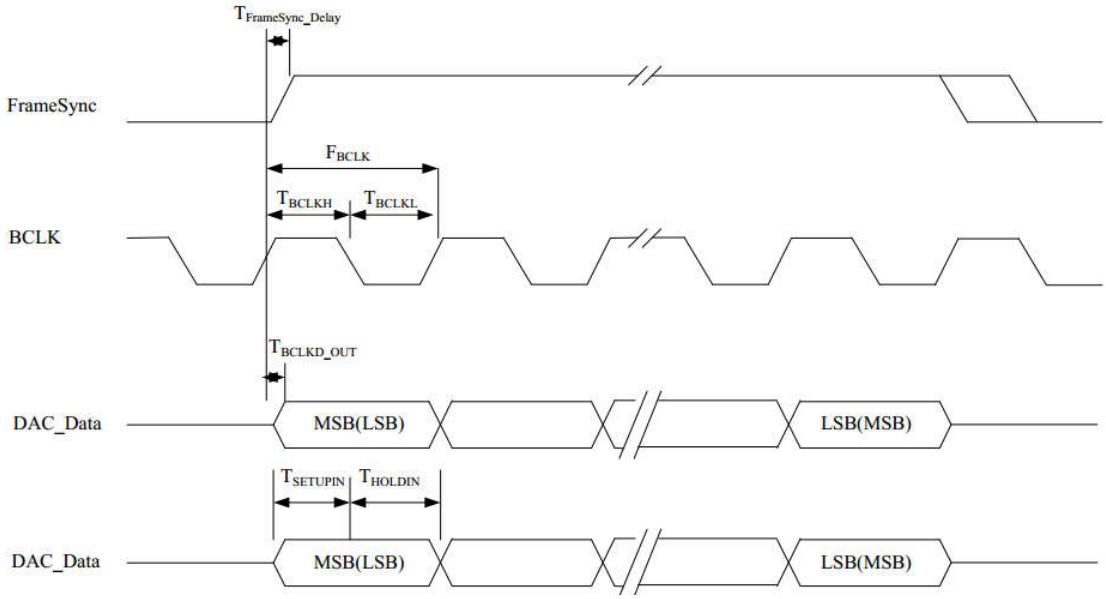

Figure 10：PCM Interface (Long FrameSync)

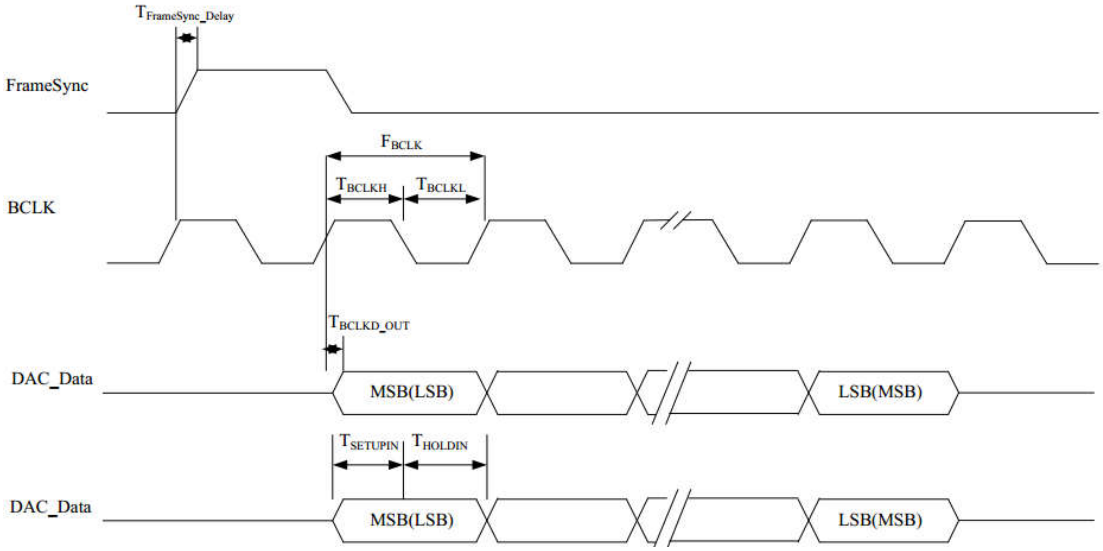

Figure 11: PCM Interface (Short FrameSync)

Symbol	Description	Min.	Typ.	Max.	Unit
F_{BCLK}	Frequency of BCLK (Master)	64	-	512	kHz
$F_{FrameSync}$	Frequency of Frame Sync (Master)	-	8	-	kHz
F_{BCLK}	Frequency of BCLK (Slave)	64	-	512	kHz
$F_{FrameSync}$	Frequency of Frame Sync (Slave)	-	8	-	kHz
D	Data Size	8	8	16	bits
N	Number of Slots Per Frame	1	1	1	Slots

Table 5: PCM Interface Clock Specifications

Symbol	Description	Min.	Typ.	Max.	Unit
T_{BCLKH}	High Period of BCLK	980	-	-	ns
T_{BCLKL}	Low Period of BCLK	970	-	-	ns
$T_{FrameSync_Delay}$	Delay Time from BCLK High to Frame Sync High	-	-	75	ns
T_{BCLKD_OUT}	Delay Time from BCLK High to Valid DAC_Data	-	-	125	ns
$T_{SETUPIN}$	Set-up Time for ADC_Data Valid to BCLK Low	10	-	-	ns
T_{HOLDIN}	Hold Time for BCLK Low to ADC_Data Invalid	125	-	-	ns

Table 6: PCM Interface Timing

5.4.4 PCM Interface Signal Levels

The PCM signal level ranges from 1.8V to 3.3V.

6. RECOMMENDED TEMPERATURE REFLOW PROFILE

The re-flow profiles are illustrated in Figure 11 and Figure 12 below.

- Follow: IPC/JEDEC J-STD-020 C
- Condition:
  - Average ramp-up rate(217℃ to peak):1~2℃/sec max.
  - Preheat:150~200C,60~180 seconds
  - Temperature maintained above 217℃:60~150 seconds
  - Time within 5℃ of actual peak temperature:20~40 sec.
  - Peak temperature:250+0/-5℃ or 260+0/-5℃
  - Ramp-down rate:3℃/sec.max.
  - Time 25℃ to peak temperature:8 minutes max
  - Cycloe interval：5 minus

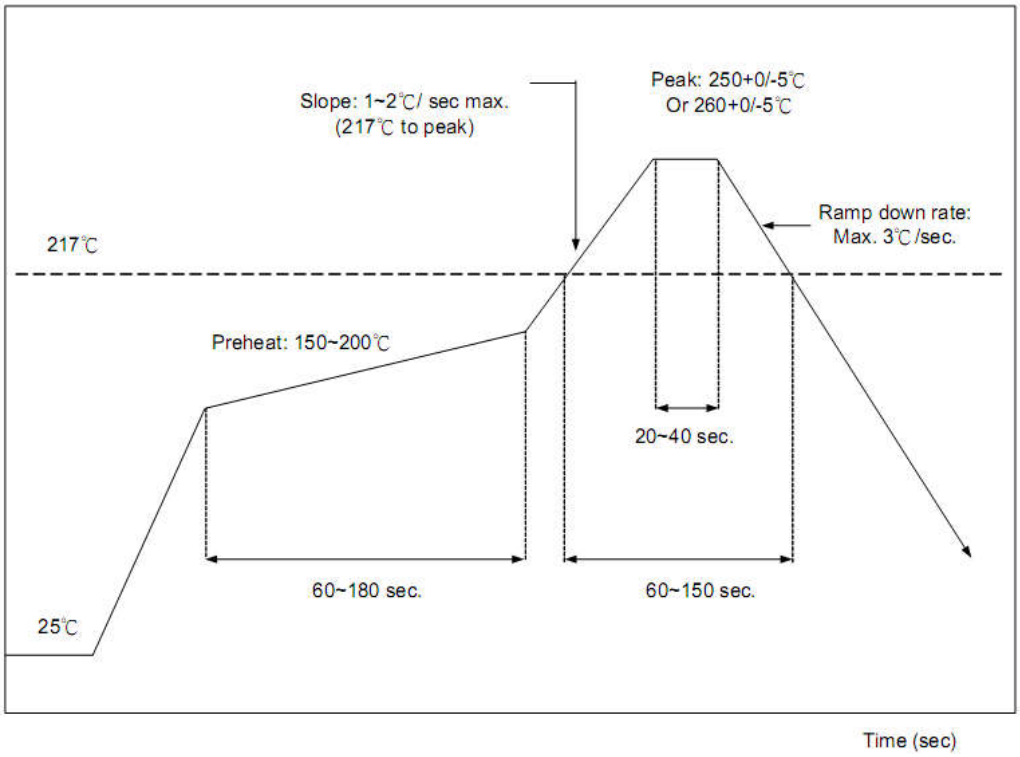

Figure 12: Typical Lead-free Re-flow Solder Profile

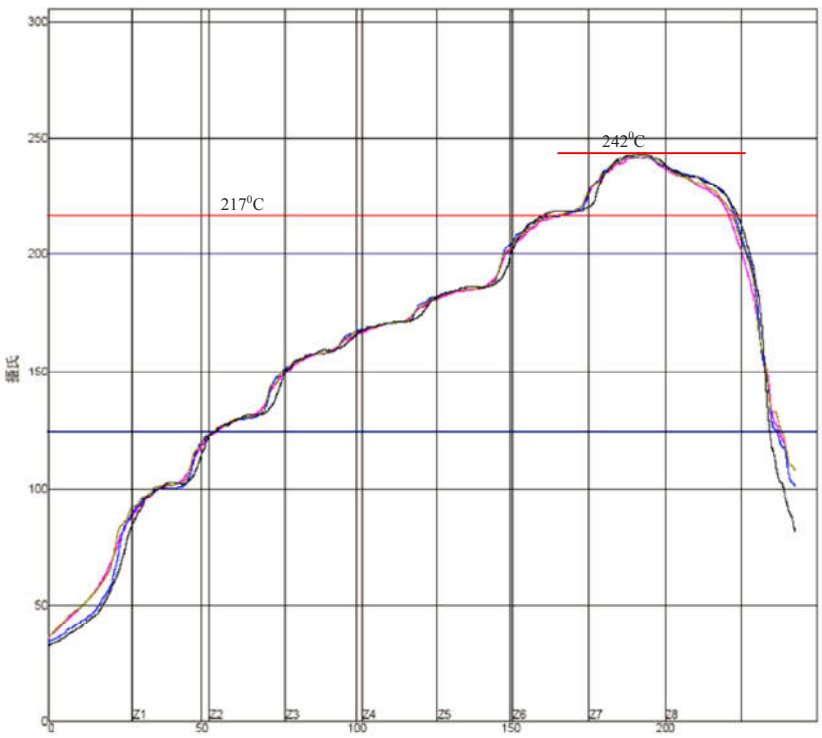

Figure 13 : Typical Lead-free Re-flow

The soldering profile depends on various parameters according to the use of different solder and material. The data here is given only for guidance on solder re-flow.

FSC-BT826 will withstand up to two re-flows to a maximum temperature of 245°C.

7. Reliability and Environmental Specification

7.1 Temperature test

Put the module in demo board which uses exit power supply, power on the module and connect to mobile. Then put the demo in the －20℃ space for 1 hour and then move to +70℃ space within 1minute, after 1 hour move back to －20℃ space within1 minute. This is 1 cycle. The cycles are 32 times and the units have to pass the testing.

7.2 Vibration Test

The module is being tested without package. The displacement requests 1.5mm and sample is vibrated in three directions(X,Y,Z).Vibration frequency set as 0.5G , a sweep rate of 0.1 octave/min from 5Hz to 100Hz last for 90 minutes each direction. Vibration frequency set as 1.5G, a sweep rate of 0.25 octave/min from 100Hz to 500Hz last for 20 minutes each direction.

7.3 Desquamation test

Use clamp to fix the module, measure the pull of the component in the module, make sure the module`s soldering is good.

7.4 Drop test

Free fall the module (condition built in a wrapper which can defend ESD) from 150cm height to cement ground, each side twice, total twelve times. The appearance will not be damaged and all functions OK.

7.5 Packaging information

After unpacking, the module should be stored in environment as follows:

- Temperature: 25℃ ± 2℃
- Humidity: <60%
- No acidity, sulfur or chlorine environment

The module must be used in four days after unpacking.

8. Layout and Soldering Considerations

8.1 Soldering Recommendations

FSC-BT826 is compatible with industrial standard reflow profile for Pb-free solders. The reflow profile used is dependent on the thermal mass of the entire populated PCB, heat transfer efficiency of the oven and particular type of solder paste used. Consult the datasheet of particular solder paste for profile configurations.

Feasycom will give following recommendations for soldering the module to ensure reliable solder joint and operation of the module after soldering. Since the profile used is process and layout dependent, the optimum profile should be studied case by case. Thus following recommendation should be taken as a starting point guide.

8.2 Layout Guidelines

It is strongly recommended to use good layout practices to ensure proper operation of the module. Placing copper or any metal near antenna deteriorates its operation by having effect on the matching properties. Metal shield around the antenna will prevent the radiation and thus metal case should not be used with the module. Use grounding vias separated max 3 mm apart at the edge of grounding areas to prevent RF penetrating inside the PCB and causing an unintentional resonator. Use GND vias all around the PCB edges.

The mother board should have no bare conductors or vias in this restricted area, because it is not covered by stop mask print. Also no copper (planes, traces or vias) are allowed in this area, because of mismatching the on-board antenna.

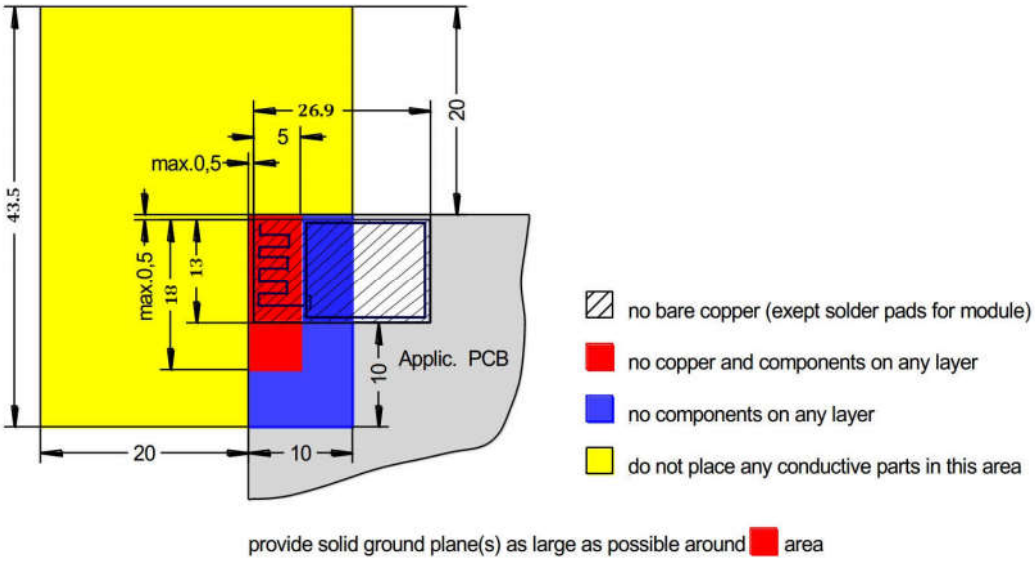

Figure 14: FSC-BT826 Restricted Area

Following recommendations helps to avoid EMC problems arising in the design. Note that each design is unique and the following list do not consider all basic design rules such as avoiding capacitive coupling between signal lines. Following list is aimed to avoid EMC problems caused by RF part of the module. Use good consideration to avoid problems arising from digital signals in the design.

Ensure that signal lines have return paths as short as possible. For example if a signal goes to an inner layer through a via, always use ground vias around it. Locate them tightly and symmetrically around the signal vias. Routing of any sensitive signals should be done in the inner layers of the PCB. Sensitive traces should have a ground area above and under the line. If this is not possible, make sure that the return path is short by other means (for example using a ground line next to the signal line).
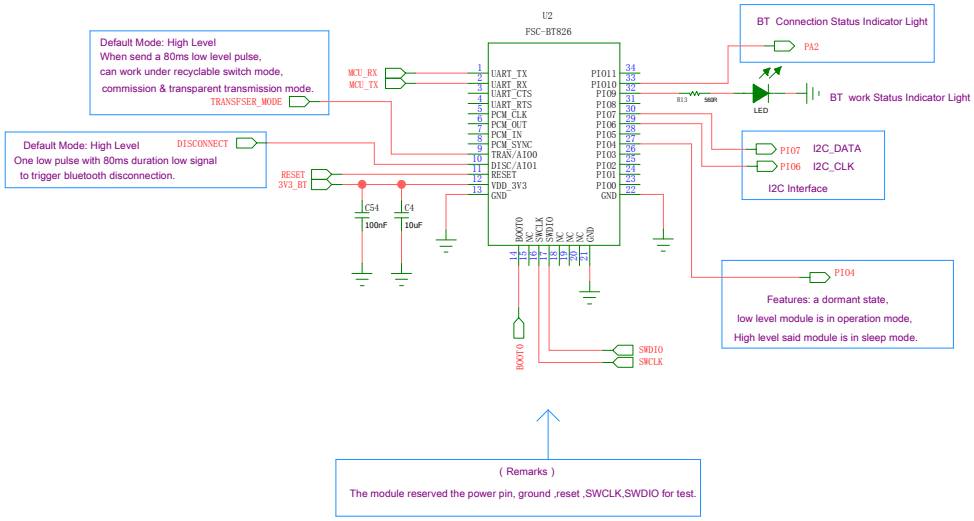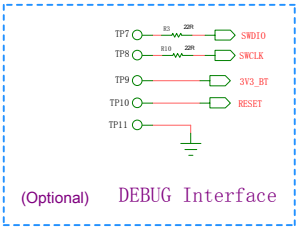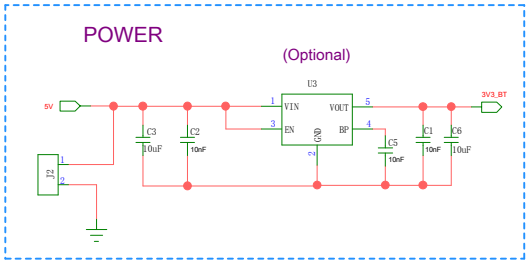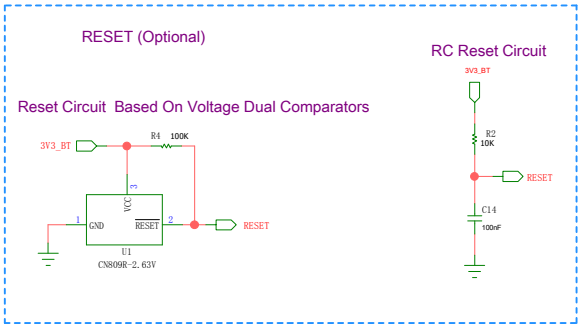
9. Application Schematic