LYNwave

產 品 承 認 書

Specification for Approval

客戶 (Customer): **光寶科技股份有限公司**

Customer Part No.: 20301-001110A000

Product Description: 802.11 a/b/g/n/ac AP Router embedded antenna

Lynwave Part No.: ALX18F-222AA3-01

客戶簽核 (Customer Approval)

客戶承認 Customer Approval	核准 (Authorized)	檢驗 (Approved)
	日期： 年 月 日	

內部簽核 (Signature)	日期： 2025 年 03 月 11 日	
Approved by	**Checked by**	**Tested by**
Tino Wu	*Eva Chiu*	*Zero Chen*

綠億科技股份有限公司

Lynwave Technology Ltd.

Taiwan: 237624 新北市三峽區學成路327號3樓之6

3F-6, No.327, Xuecheng Rd., Sanxia Dist., New Taipei City 237624,

Taiwan Tel: 02-35018700 Fax: 02-35019833

E-mail: service@lynwave.com

Contents

Item	Description	Page
1.	Cover	1
2.	Contents	2
3.	Specification	3
4.	Drawing	4
5.	Test report	5~10
6.	Other	11~13

Specification

Physical Properties :

1. Operation temperature : -40℃~+85℃
2. Storage temperature: -40℃~+85℃
3. Storage period: 2years
4. Weight: 0.465g

Antenna	Brand Name	Model Name	Ant. Type	Connector	Frequency	Max Peak Gain	Note
Specification	Lynwave Technology Ltd. (新北市三峽區學成路327號3樓之6)	ALX18F-222AA3-01	Dipole	IPEX	2.4G + 5G	2.4G: 3.5 dBi 5G: 5.5 dBi	Provided antenna gain includes cable loss

Rev	Zone	Description	ENG	Approved	Date

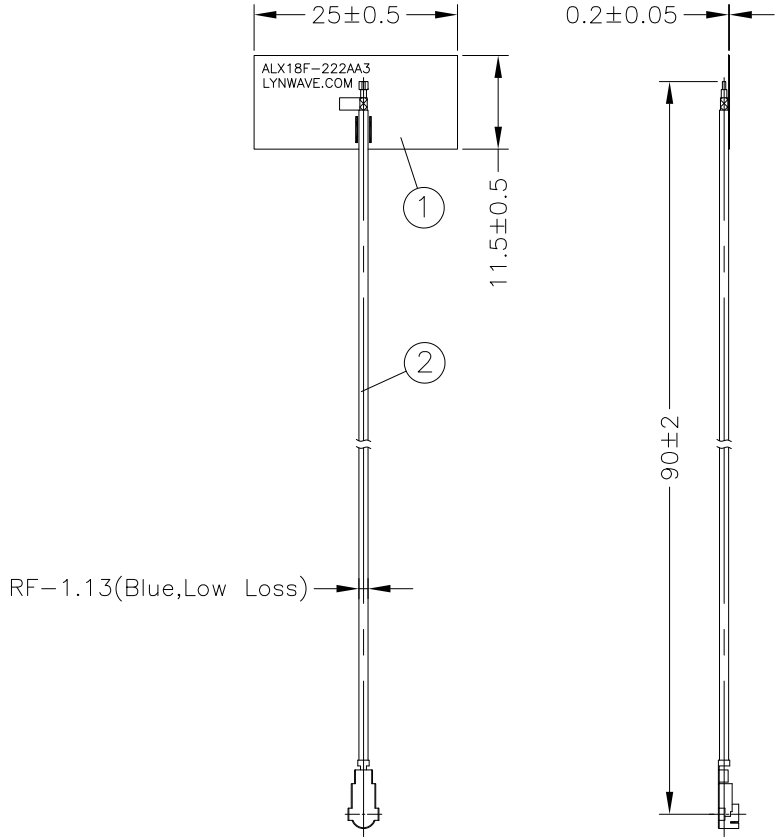

備註:
1.MHF compatible有方向性,請依照圖面方向生產.
2.Cable不得超出白線範圍外.

No.	Description	Specification	Qty
2	Cable	DIA 1.13mm,SINGLE COAXIAL LOW LOSS CABLE,COLOR: BLUE	1
1	FPCB	FPCB,L25 x W11.5 x T0.2mm,COLOR: GREEN	1

TOLERANCE		CUSTOMER	PART NO.	DESCRIPTION:	DWG NO.	REV.
XXX.	±1.0	----	----	Antenna	ALX18F-222AA3-01	A0
XX.	±0.5	PROJECTION	UNIT	SCALE	SIZE	SHEET
X.	±0.3		mm	1:1	A4	1/1
.X	±0.1	APPROVED:	DESIGNED:	DRAWN:		
.XX	±0.05	-----	James	Anna		

LYNwave
www.lynwave.com

綠德科技股份有限公司
Lynwave Technology Ltd.
2024.08.15
文管中心 發行文件
☐制 ☑修 ☐作廢

LYNwave
Wireless Connected World

ALX18F-222AA3-01

802.11 a/b/g/n/ac AP/Router embedded antenna

Features

- Dual band IEEE 802.11 a/b/g/n/ac standard
- Case mounting
- High efficiency
- Quick integration

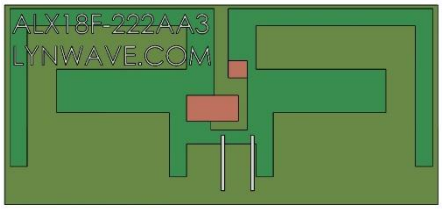

Specification

Frequency (MHz)	2412 ~ 2484	5150 ~ 5825
Peak Gain (dBi)	3.5	5.5
VSWR	2.0:1	2.0:1
Power (Watts)	1	1
Impedance (Ohms)	50	50
Dimension (mm)	25 x 11.5 x 0.2	
Connector	MHF compatible	
Cable length (mm)	90	
Operating Temp (°C)	-40°C ~ +85°C	

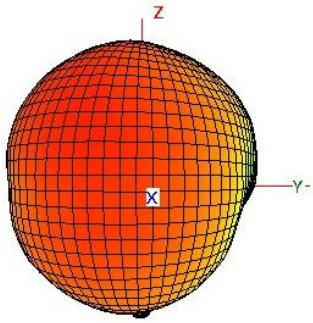

2.45GHz

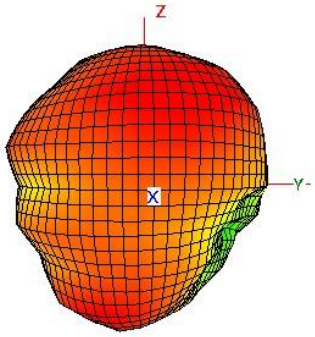

5GHz

Mechanical Dimensions

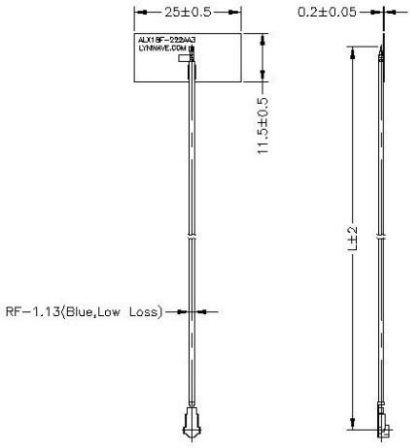

綠億科技股份有限公司
Lynwave Technology Ltd.
2024.08.15
文管中心 發行文件
☐ 制 ☑ 修 ☐ 作廢

綠 億 科 技 股 份 有 限 公 司
LYNwave Technology , Ltd.

Reliability Test Report

Model : Antenna

Customer Part No: 20301-001110A000

Lynwave Part No: ALX18F-222AA3-01

Frequency : 2G&5G

VSWR ：2.0：1 Max

2G Gain ：3.5 dBi

5G Gain ：5.5 dBi

Test Results: ■ PASS ☐ NG

Approved By : **Yungming Hsu 2024/7/8** **Prepared By:** **Lisa Wei 2024/7/8**

1. Test Item : High Temperature test

1.1 Test equipment :

JD-8001-80L Temperature-Humidity chamber

1.2 Test ambience :

Temperature : 70±5℃

Humidity(RH) :60 ± 15%

1.3 EUT's Model & Quantity :

Model : Antenna

Quantity : 3 sets

1.4 Test conditions : Non Operation

1.5 Test method : Refer IEC-68-2-2

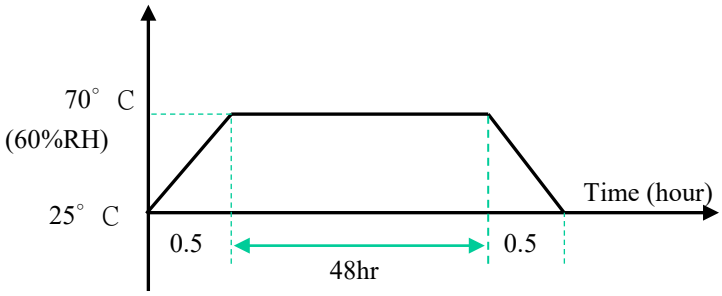

1.6 Test results :

test frequency range(U) (GHZ)	3.20		6.50	
Spec.	VSWR < 2.4		VSWR < 1.9	
sample	test after	test before	test after	test before
1	1.92	1.96	1.78	1.78
2	1.96	1.90	1.81	1.79
3	1.90	1.96	1.86	1.83
Judg.	OK	OK	OK	OK

(1).Visual inspection as normal.

(2).Function test as normal during the test.

2.Test Item : Cold test

2.1 Test equipment :

JD-8001-80L Temperature-Humidity chamber

2.2 Test ambience :

Temperature : -10±5℃

Humidity(RH) : 60 ±15%

2.3 EUT's Model & Quantity :

Model : Antenna

Quantity : 3 sets

2.4 Test conditions : Non Operation

Test method : Refer IEC-68-2-1

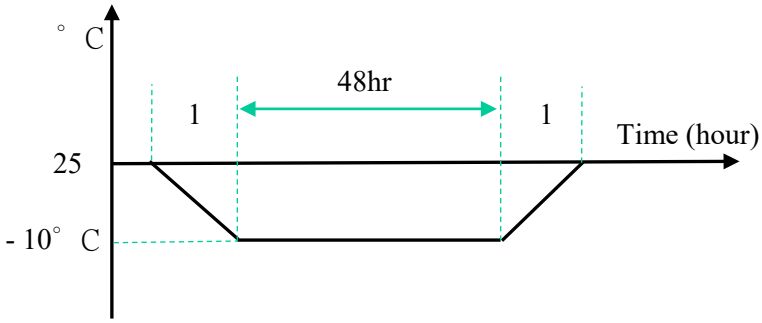

2.5 Test results :

test frequency range(U) (GHZ)	3.20		6.50	
Spec.	VSWR < 2.4		VSWR < 1.9	
sample	test after	test before	test after	test before
1	1.96	1.96	1.85	1.80
2	1.92	1.90	1.89	1.84
3	1.91	1.89	1.84	1.80
Judg.	OK	OK	OK	OK

(1).Visual inspection as normal.

(2).Function test as normal during the test.

3. Test Item : Composite temperature / humidity cycling test

3.1 Test equipment :

JD-8001-80L Temperature-Humidity chamber

3.2 Test ambience :

Temperature : -40~85℃ ±2℃

Humidity(RH) : 0~90%

3.3 Model : 20 Cycle

Quantity : 3 sets

3.4 Test conditions : Non Operation

Test method : Refer IEC 68-2-30

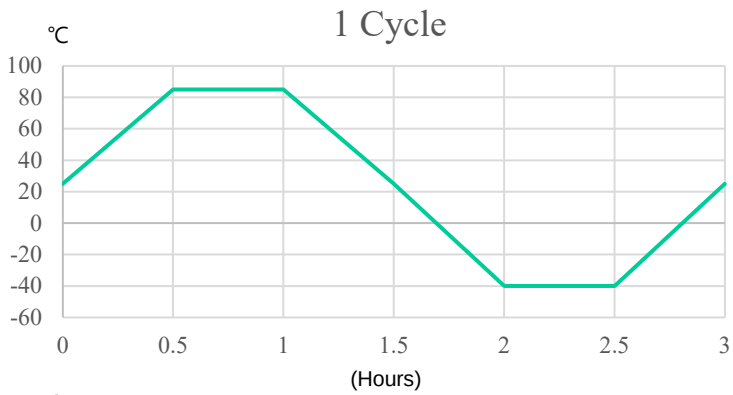

3.5 Test results :

test frequency range(U) (GHZ)	3.20		6.50	
Spec.	VSWR < 2.4		VSWR < 1.9	
sample	test after	test before	test after	test before
1	1.95	1.97	1.78	1.87
2	1.88	1.89	1.83	1.82
3	1.89	1.89	1.88	1.83
Judg.	OK	OK	OK	OK

(1).Visual inspection as normal.

(2).Function test as normal during the test.

4.**Test Item : <u>Salt-fog test</u>**

4.1 Test equipment :

JD-60A

4.2 EUT's Model & Quantity :

Model :Antenna

Quantity : 3 sets

4.3 Test conditions : Non Operation

4.4 Test method : Refer MIL-STD-810E

4.5 Humidity(RH) : 60±15％

4.6 Test chamber temperature :35℃±1℃

4.7 Salt concentration : 5% ±1%

4.8 Salt solution pH value : 6.5 ~ 7.2

4.9 Duration of exposure : 48 hrs

4.10 Test result: Visual inspection as normal.

Certificate of Conformance for Safety Material
符合安規材料證明

To Whom It May Concern,

Lynwave Technology Ltd. (Supplier Name) as a supplier to Liteon Technology Corp ,this is to certify that the safety parts can conform to all safety requirement of applicable drawings or characteristics in approval sheet. If any deviation with the requirement, the material supplier will be responsible for the cost incurred.
綠億科技股份有限公司作為光寶科技股份有限公司供應商,這是證明所提供安規材料能符合到承認書中的工程圖面和物質特性描述的安規要求,如果所提供材料與這些安規要求有不一致,供應商是有責任接受由此產生的成本轉嫁.

Purchase Order number: _____ Shipment Date: _____
訂單號碼: 出貨時間:

Molding Date: _____
生產日期:

Supplier Part number: ALX18F-222AA3-01 Liteon Part number: 20301-001110A000
供應商料號: 光寶料號:

Part Name: Antenna Quantity: _____
品名: 數量:

Material supplier & material designation 物料供应商与 指定物料：(分別原料供應商) :
(1)FPC: 九江，(2)Cable:神宇，(3)ADHESIVE:3M，(4)Connector: 彩美

Material Characteristics 物料特性：(物質成分及分別之百分比) :
FPC:13.4%，Cable:48.6%，Connector:15.9%，ADHESIVE:8.5%，Solder:13.6%

Min thickness: 0.1 mm
產品主體最小的厚度：

Safety Rating 安規等級:

Safety File Number: 安規文件號碼: (1)FPC: E192337,(2)Cable: E318898,(3) ADHESIVE:MH26206
(4)Connector: E107536

Authorized company official Name &Title: 徐永銘 / 處長
公司授權的人名/職位

Company Chapter:
公司章

Date(Y/M/D): 2024/0708
日期(年/月/日)

SOP-RD-003-FORM20-C

MATERIAL COMPOSITION DECLARATION

材 料 成 份 表

Ver.D

Supplier name (供應商)：綠億科技

(產品圖像) Component Photo

Date (日期)：2024/07/08

Part No. (光寶料號): 20301-001110A000

Description (料稱) : ALX18F-222AA3-01

Composition part	Material name	Material mass (mg)	Material mass (%)	Element name composition	CAS No.	Element % (by weight)	ICP Test data												是否為EU ROHS豁免零件, 如是, 請注明符合EU ROHS之豁免條款
構成部件	部件材質名	材質重量	材質重量百分比	構成之元素名稱	CAS 編號	元素百分比 (以重量計)	Cd (ppm	Pb (ppm)	Hg(ppm	Cr+6(pp	PBBs	PBDEs	DEHP	DIBP	BBP	DBP	Br	Cl	
FPCB_板材	LPI-HF	10.8	2.32	聚酰亚胺薄膜	25038-81-7	15	ND	ND	ND	ND	ND	ND	ND	ND	ND	ND	ND	ND	
FPCB_板材	LPI-HF	3.6	0.77	环氧树脂	25036-25-3	5	ND	ND	ND	ND	ND	ND	ND	ND	ND	ND	ND	ND	
FPCB_板材	LPI-HF	0.72	0.15	阻燃剂	225789-38-8	1	ND	ND	ND	ND	ND	ND	ND	ND	ND	ND	ND	ND	
FPCB_板材	LPI-HF	1.8	0.39	橡膠	9003-18-3	2.5	ND	ND	ND	ND	ND	ND	ND	ND	ND	ND	ND	ND	
FPCB_板材	LPI-HF	55.08	11.85	銅箔	7440-50-8	76.5	ND	ND	ND	ND	ND	ND	ND	ND	ND	ND	ND	ND	
FPCB_膠	3M 467MP	0.8	0.17	Acrylate Polymer	26265-08-7	100	ND	ND	ND	ND	ND	ND	ND	ND	ND	ND			
FPCB_SOLDER MASK(GREEN)	KSM-S6189EG02	0.6	0.13	甲阶酚醛环氧树脂	29690-82-2	15	ND	ND	ND	ND	ND	ND	ND	ND	ND	ND	ND	476	
FPCB_SOLDER MASK(GREEN)	KSM-S6189EG02	1	0.22	环氧丙烯酸	9003-19-4	25	ND	ND	ND	ND	ND	ND	ND	ND	ND	ND	ND	476	
FPCB_SOLDER MASK(GREEN)	KSM-S6189EG02	0.2	0.04	光引发剂	71868-10-5	5	ND	ND	ND	ND	ND	ND	ND	ND	ND	ND	ND	476	
FPCB_SOLDER MASK(GREEN)	KSM-S6189EG02	0.2	0.04	高沸点溶剂（DBE）	95481-62-2	5	ND	ND	ND	ND	ND	ND	ND	ND	ND	ND	ND	476	
FPCB_SOLDER MASK(GREEN)	KSM-S6189EG02	0.2	0.04	顏料(酞菁蓝)	147-14-8	5	ND	ND	ND	ND	ND	ND	ND	ND	ND	ND	ND	476	
FPCB_SOLDER MASK(GREEN)	KSM-S6189EG02	0.2	0.04	顏料(异吲哚啉黄)	36888-99-0	5	ND	ND	ND	ND	ND	ND	ND	ND	ND	ND	ND	476	
FPCB_SOLDER MASK(GREEN)	KSM-S6189EG02	1	0.22	硫酸銅	7727-43-7	25	ND	ND	ND	ND	ND	ND	ND	ND	ND	ND	ND	476	
FPCB_SOLDER MASK(GREEN)	KSM-S6189EG02	0.2	0.04	表面助剂（聚二甲基硅氧烷）	9016-00-6	5	ND	ND	ND	ND	ND	ND	ND	ND	ND	ND	ND	476	
FPCB_SOLDER MASK(GREEN)	KSM-S6189EG02	0.2	0.04	无机填料（二氧化硅）	14464-46-1	5	ND	ND	ND	ND	ND	ND	ND	ND	ND	ND	ND	476	
FPCB_SOLDER MASK(GREEN)	KSM-S6189EG02	0.2	0.04	三聚氰胺	108-78-1	5	ND	ND	ND	ND	ND	ND	ND	ND	ND	ND	ND	476	
FPCB_COATING	防氧化原液DX-808HT	0.008	0.00	苯并咪唑	95-14-7	1	ND	ND	ND	ND	ND	ND	ND	ND	ND	ND			
FPCB_COATING	防氧化原液DX-808HT	0.024	0.01	甲酸	64-18-6	3	ND	ND	ND	ND	ND	ND	ND	ND	ND	ND			
FPCB_COATING	防氧化原液DX-808HT	0.0004	0.00	添加剂	Not applicable	0.05	ND	ND	ND	ND	ND	ND	ND	ND	ND	ND			
FPCB_COATING	防氧化原液DX-808HT	0.7676	0.17	DI 水	7732-18-5	95.95	ND	ND	ND	ND	ND	ND	ND	ND	ND	ND			
FPCB_TEXT INK(WHITE)	KTM-150F WM	0.528	0.11	聚酯樹脂	7308-30-1	22	ND	ND	ND	ND	ND	ND	ND	ND	ND	ND	ND	ND	
FPCB_TEXT INK(WHITE)	KTM-150F WM	0.528	0.11	混合溶剂	0：1119-40-0；(	22	ND	ND	ND	ND	ND	ND	ND	ND	ND	ND	ND	ND	
FPCB_TEXT INK(WHITE)	KTM-150F WM	0.792	0.17	二氧化鈦	13463-67-7	33	ND	ND	ND	ND	ND	ND	ND	ND	ND	ND	ND	ND	
FPCB_TEXT INK(WHITE)	KTM-150F WM	0.288	0.06	填充料	14807-96-6	12	ND	ND	ND	ND	ND	ND	ND	ND	ND	ND	ND	ND	
FPCB_TEXT INK(WHITE)	KTM-150F WM	0.192	0.04	六亞甲基二異氰酸指低聚物	21093-51-6	8	ND	ND	ND	ND	ND	ND	ND	ND	ND	ND	ND	ND	
FPCB_TEXT INK(WHITE)	KTM-150F WM	0.072	0.02	乙酸丁酯	627-93-0	3	ND	ND	ND	ND	ND	ND	ND	ND	ND	ND	ND	ND	
CABLE_鍍銀銅線基材	Silver plated copper wire	23.4	5.03	銅	7440-50-8	90	ND	ND	ND	ND	ND	ND	ND	ND	ND	ND			
CABLE_鍍銀銅線鍍層	镀银软铜线	2.6	0.56	銀	7440-22-4	10	ND	ND	ND	ND	ND	ND	ND	ND	ND	ND			
CABLE_塑膠絕緣	NEOFLON FEP NP-101	39	8.39	Perfluoro(ethylene-propene) copolymer	25067-11-2	100	ND	ND	ND	ND	ND	ND	ND	ND	ND	ND	ND	ND	
CABLE_銅箔金屬	PET4/CU8	35.56	7.65	Cu	7440-50-8	88.9	ND	ND	ND	ND	ND	ND	ND	ND	ND	ND	ND	ND	
CABLE_銅箔膠	PET4/CU8	2	0.43	Resin	Not applicable	5	ND	ND	ND	ND	ND	ND	ND	ND	ND	ND	ND	ND	
CABLE_銅箔MYLAR	PET4/CU8	2.44	0.52	Polyethylene terephthalate	25038-59-9	6.1	ND	ND	ND	ND	ND	ND	ND	ND	ND	ND	ND	ND	
CABLE_鍍錫銅線基材	鍍錫線	90.0809	19.37	Cu	7440-50-8	98.99	ND	ND	ND	ND	ND	ND	ND	ND	ND	ND			
CABLE_鍍錫銅線鍍層	鍍錫線	0.91	0.20	Sn	7440-31-5	1	ND	34	ND	ND	ND	ND	ND	ND	ND	ND			
CABLE_鍍錫銅線鍍層	鍍錫線	0.0091	0.00	OTHERS	Not applicable	0.01	ND	34	ND	ND	ND	ND	ND	ND	ND	ND			
CABLE_塑膠外被(BLUE)	NEOFLON FEP NP-101	93.6	20.13	FEP	25067-11-2	90	ND	ND	ND	ND	ND	ND	ND	ND	ND	ND	ND	ND	
CABLE_塑膠外被(BLUE)	NP-101 Masterbatch high strength	10.4	2.24	ious heavy metal free organic and inorganic pigments. Undangerous substa	Not applicable	10	ND	ND	ND	ND	ND	ND	ND	ND	ND	ND	ND	ND	
Connector 1.13_CONTACT鍍線	Nickel Plating	1.289355	0.28	Ni	7440-02-0	99.95	ND	ND	ND	ND	ND	ND	ND	ND	ND	ND	ND	ND	
Connector 1.13_CONTACT鍍線	Nickel Plating	0.000129	0.00	S	63705-05-5	0.01	ND	ND	ND	ND	ND	ND	ND	ND	ND	ND	ND	ND	
Connector 1.13_CONTACT鍍線	Nickel Plating	0.000129	0.00	C	7440-44-0	0.01	ND	ND	ND	ND	ND	ND	ND	ND	ND	ND	ND	ND	
Connector 1.13_CONTACT鍍線	Nickel Plating	0.000387	0.00	Cu	7440-50-8	0.03	ND	ND	ND	ND	ND	ND	ND	ND	ND	ND	ND	ND	
Connector 1.13_CONTACT鍍金	無鉛電鍍金層	0.20937	0.05	Au	7440-57-5	99.7	ND	ND	ND	ND	ND	ND	ND	ND	ND	ND	ND	ND	
Connector 1.13_CONTACT鍍金	無鉛電鍍金層	0.000315	0.00	Co	7440-48-4	0.15	ND	ND	ND	ND	ND	ND	ND	ND	ND	ND	ND	ND	
Connector 1.13_CONTACT鍍金	無鉛電鍍金層	0.000315	0.00	其他	Not applicable	0.15	ND	ND	ND	ND	ND	ND	ND	ND	ND	ND	ND	ND	
Connector 1.13_CONTACT	C5210(不含紅磷)	27.4245	5.90	Cu	7440-50-8	91.415	ND	11	ND	ND	ND	ND	ND	ND	ND	ND	ND	ND	
Connector 1.13_CONTACT	C5210(不含紅磷)	2.355	0.51	Sn	7440-31-5	7.85	ND	11	ND	ND	ND	ND	ND	ND	ND	ND	ND	ND	
Connector 1.13_CONTACT	C5210(不含紅磷)	0.105	0.02	P	7723-14-0	0.35	ND	11	ND	ND	ND	ND	ND	ND	ND	ND	ND	ND	
Connector 1.13_CONTACT	C5210(不含紅磷)	0.06	0.01	Zn	7440-66-6	0.2	ND	11	ND	ND	ND	ND	ND	ND	ND	ND	ND	ND	
Connector 1.13_CONTACT	C5210(不含紅磷)	0.006	0.00	Pb	7439-92-1	0.02	ND	11	ND	ND	ND	ND	ND	ND	ND	ND	ND	ND	
Connector 1.13_CONTACT	C5210(不含紅磷)	0.03	0.01	Fe	7439-89-6	0.1	ND	11	ND	ND	ND	ND	ND	ND	ND	ND	ND	ND	
Connector 1.13_CONTACT	C5210(不含紅磷)	0.018	0.00	Ni	7440-02-0	0.06	ND	11	ND	ND	ND	ND	ND	ND	ND	ND	ND	ND	
Connector 1.13_CONTACT	C5210(不含紅磷)	0.0006	0.00	Al	7429-90-5	0.002	ND	11	ND	ND	ND	ND	ND	ND	ND	ND	ND	ND	
Connector 1.13_CONTACT	C5210(不含紅磷)	0.0009	0.00	Si	7440-21-3	0.003	ND	11	ND	ND	ND	ND	ND	ND	ND	ND	ND	ND	
Connector 1.13_GROUND CONTACT鍍線	Nickel Plating	0.85957	0.18	Ni	7440-02-0	99.95	ND	ND	ND	ND	ND	ND	ND	ND	ND	ND	ND	ND	
Connector 1.13_GROUND CONTACT鍍線	Nickel Plating	0.000086	0.00	S	63705-05-5	0.01	ND	ND	ND	ND	ND	ND	ND	ND	ND	ND	ND	ND	
Connector 1.13_GROUND CONTACT鍍線	Nickel Plating	0.000086	0.00	C	7440-44-0	0.01	ND	ND	ND	ND	ND	ND	ND	ND	ND	ND	ND	ND	
Connector 1.13_GROUND CONTACT鍍線	Nickel Plating	0.000258	0.00	Cu	7440-50-8	0.03	ND	ND	ND	ND	ND	ND	ND	ND	ND	ND	ND	ND	
Connector 1.13_GROUND CONTACT鍍金	無鉛電鍍金層	0.13958	0.03	Au	7440-57-5	99.7	ND	ND	ND	ND	ND	ND	ND	ND	ND	ND	ND	ND	
Connector 1.13_GROUND CONTACT鍍金	無鉛電鍍金層	0.00021	0.00	Co	7440-48-4	0.15	ND	ND	ND	ND	ND	ND	ND	ND	ND	ND	ND	ND	
Connector 1.13_GROUND CONTACT鍍金	無鉛電鍍金層	0.00021	0.00	其他	Not applicable	0.15	ND	ND	ND	ND	ND	ND	ND	ND	ND	ND	ND	ND	
Connector 1.13_GROUND CONTACT	C5210(不含紅磷)	5.941975	1.28	Cu	7440-50-8	91.415	ND	11	ND	ND	ND	ND	ND	ND	ND	ND	ND	ND	
Connector 1.13_GROUND CONTACT	C5210(不含紅磷)	0.51025	0.11	Sn	7440-31-5	7.85	ND	11	ND	ND	ND	ND	ND	ND	ND	ND	ND	ND	
Connector 1.13_GROUND CONTACT	C5210(不含紅磷)	0.02275	0.00	P	7723-14-0	0.35	ND	11	ND	ND	ND	ND	ND	ND	ND	ND	ND	ND	
Connector 1.13_GROUND CONTACT	C5210(不含紅磷)	0.013	0.00	Zn	7440-66-6	0.2	ND	11	ND	ND	ND	ND	ND	ND	ND	ND	ND	ND	
Connector 1.13_GROUND CONTACT	C5210(不含紅磷)	0.0013	0.00	Pb	7439-92-1	0.02	ND	11	ND	ND	ND	ND	ND	ND	ND	ND	ND	ND	
Connector 1.13_GROUND CONTACT	C5210(不含紅磷)	0.0065	0.00	Fe	7439-89-6	0.1	ND	11	ND	ND	ND	ND	ND	ND	ND	ND	ND	ND	
Connector 1.13_GROUND CONTACT	C5210(不含紅磷)	0.0039	0.00	Ni	7440-02-0	0.06	ND	11	ND	ND	ND	ND	ND	ND	ND	ND	ND	ND	
Connector 1.13_GROUND CONTACT	C5210(不含紅磷)	0.00013	0.00	Al	7429-90-5	0.002	ND	11	ND	ND	ND	ND	ND	ND	ND	ND	ND	ND	
Connector 1.13_GROUND CONTACT	C5210(不含紅磷)	0.000195	0.00	Si	7440-21-3	0.003	ND	11	ND	ND	ND	ND	ND	ND	ND	ND	ND	ND	
Connector 1.13_HOUSING(BLACK)	SHINITE® PBT D201G30BK(不含紅磷)	6.6	1.42	PBT	30965-26-5	60	ND	3	ND	ND	ND	ND	ND	ND	ND	ND			
Connector 1.13_HOUSING(BLACK)	SHINITE® PBT D201G30BK(不含紅磷)	3.3	0.71	Glass fiber	65997-17-3	30	ND	3	ND	ND	ND	ND	ND	ND	ND	ND			
Connector 1.13_HOUSING(BLACK)	SHINITE® PBT D201G30BK(不含紅磷)	0.55	0.12	Carbbon black	1333-86-4	5.00	ND	3	ND	ND	ND	ND	ND	ND	ND	ND			
Connector 1.13_HOUSING(BLACK)	SHINITE® PBT D201G30BK(不含紅磷)	0.55	0.12	Additives	Not applicable	5.00	ND	3	ND	ND	ND	ND	ND	ND	ND	ND			
SOLDER	無鉛錫線	34.755	7.47	Sn	7440-31-5	99.30	ND	52	ND	ND	ND	ND	ND	ND	ND	ND			
SOLDER	無鉛錫線	0.245	0.05	Cu	7440-50-8	0.7	ND	52	ND	ND	ND	ND	ND	ND	ND	ND			
	因涉公司材料配方机密，部分物质未在成份表中呈现，但绝不含有 "Lite-onWI-RDC-016" 标准中所定义的禁用有毒物质。 For material formula confidential company, part of the material not in ingredients present in the table, but not contain "Lite - onWI-RDC-016" standard defined in the disable toxic substances.																		
		465	100.00																
		ttl wt = ? mg	Sum = 100																

Approved by (核准) : Yungming Hsu

Reviewed by (審查): Tino Wu

Initiated by (制作人): Lisa Wei

綠億科技股份有限公司

包裝規範書

產品名稱	天線	客戶名稱	光寶	版次	A
綠億料號	ALX18F-222AA2-01 ALX18F-222AA3-01	客戶料號		製作日期	2020/12/24

產品包裝說明	產品包裝圖示
一、包裝： (1)每25PCS/束、 50PCS / 小袋 二、裝箱： 每箱16袋，共8000pcs 註: 以實際裝箱數量為準	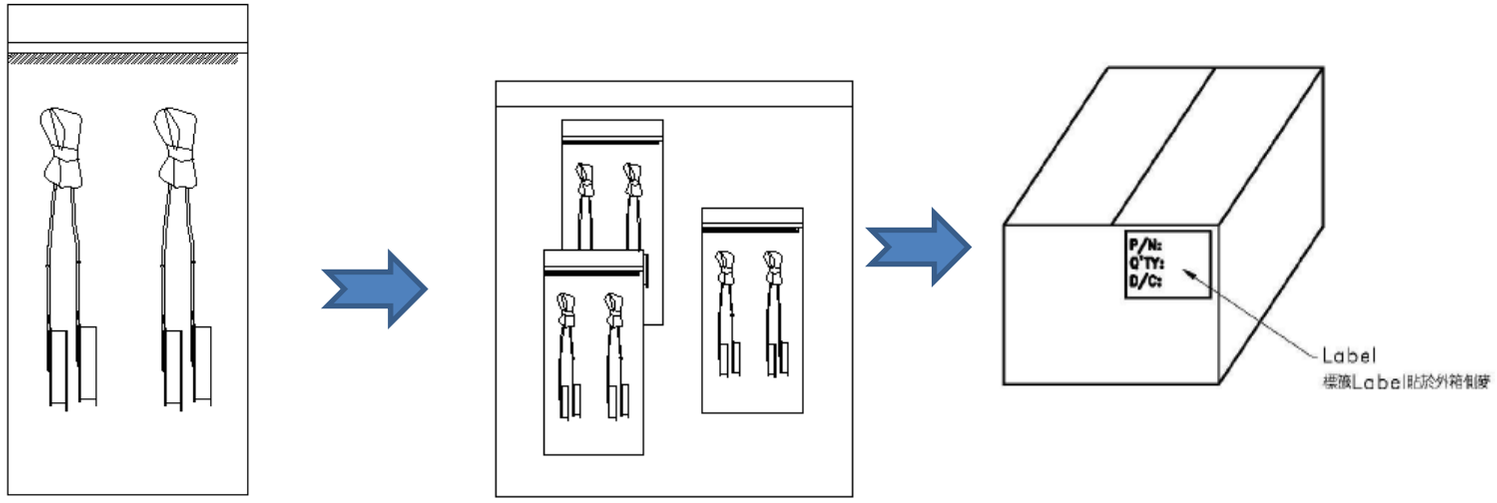 50pcs/小袋　500pcs/大袋　8000pcs/16袋/箱

核准：徐永銘　審核：張良鉅　製表：魏詩怡