The world's leading away from home
skin care system company

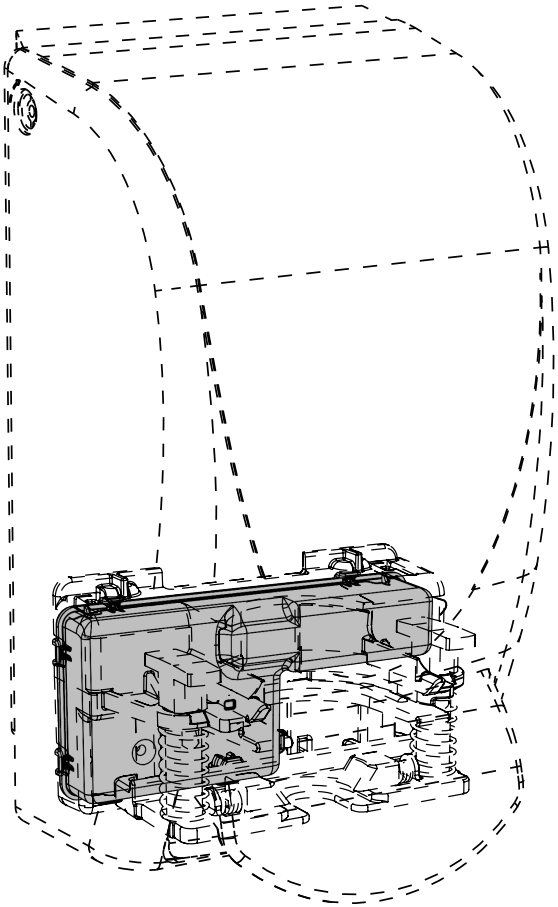

1135-400
DISPENSER TELEMETRY MODULE
INSTALLATION & OPERATION GUIDE

INTRODUCTION

The Deb Dispenser monitoring system is intended to provide remote monitoring of soap dispenser activations. The dispenser telemetry modules are intended for use as part of a larger system comprising of Wireless basestations (1135-100) along with a server. The system operates using the license free (ISM/SRD) bands.

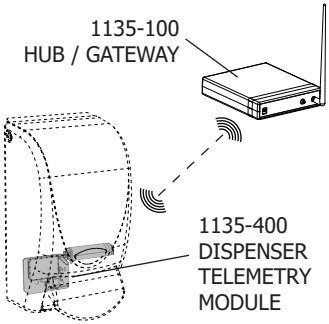

FEATURES

- 905 MHz Single Channel Radio
- 250kbps OQPSK
- Integral PCB Antenna(-10dBi gain)
- Duty Cycle 0.00025%
- Reed Switch Activation
- 5 Year Battery Life (100 activations / day)
- Temp. range (10 to 40 degrees C)
- Crystal Controlled Real Time Clock
- Rating: 3.6V, 0.2A.
- **Lithium battery not user replaceable**

TELEMETRY MODULE INSTALLATION

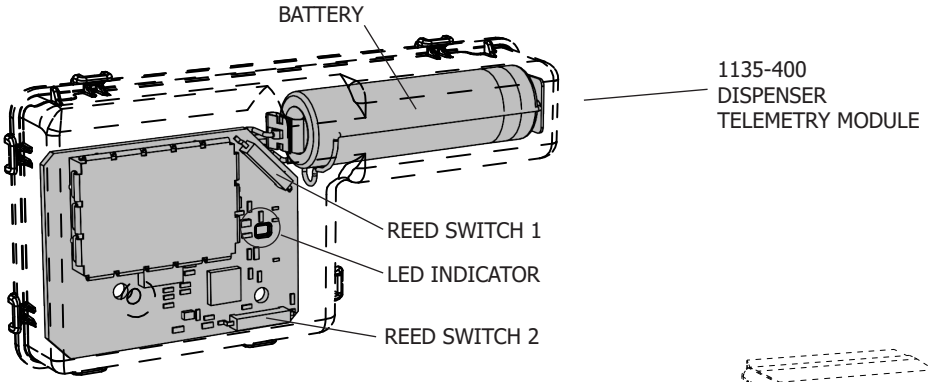

The Telemetry module is installed into the dispenser mechanism, along with the activation magnet.

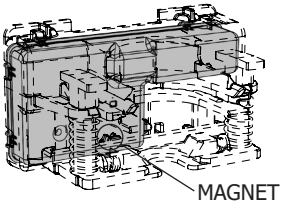

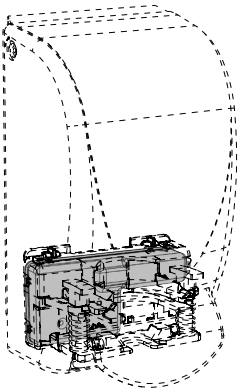

The complete dispenser mechanism assembly is then installed into the dispenser.

INSTALLATION MODE

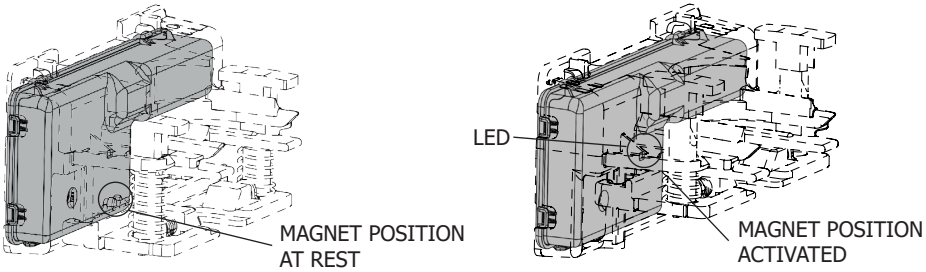

To aid installation a Light Emitting Diode (LED) is provided. To activate installation mode hold the mechanism in the activated position, as shown above, for approximately 5 seconds. Provided a working Wireless basestation is in radio range the LED will flash slowly 5 times.

Once installation mode has been activated the LED will flash briefly whenever a successful activation occurs. Installation mode is valid for 5 activations after which normal operation resumes.

NOTE: During installation mode the normal 2.5 second activation window is not enabled and each individual dispense is treated as an activation.

STANDARD OPERATION

During normal operation the dispenser is in a low power standby mode and is "woken" by an activation. This triggers a 2.5 second window during which subsequent activations are accumulated into a single event. The event is then time stamped in UTC format and transmitted to the nearest Wireless basestaion. Upon successful transmission the message is deleted and the unit returns to the low power standby mode.

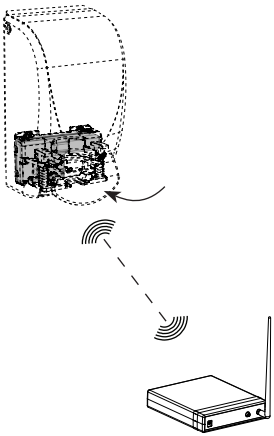

Messages that are failed to be acknowledged are stored and the dispenser attempts to retransmit the message(s) either on the next successful transmission or after 5 minutes. A maximum of 50 messages are stored. On retry the dispenser will enter broadcast mode in an attempt to locate a Wireless basestation with a more reliable radio link.

STATE OF CHARGE MESSAGE

A daily state of charge message is transmitted that includes the calculated battery level provided there are no failed messages waiting to be transmitted. The time of day is randomised based on the address of the dispenser. During the transmission of the state of charge message the dispenser enters a broadcast mode to re-acquire the time and validates that it is connected to the Wireless basestation with the highest signal strength.

NON-REPLACEABLE LITHIUM BATTERY

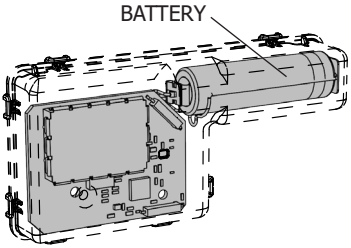

A 3.6V Lithium battery is integrated directly into the dispenser telemetry module as a non-replaceable power source.
This battery will give up to 5 years of reliable performance at which point a Deb service representative will handle all elements of the replacement.

CAUTION
RISK OF EXPLOSION IF BATTERY IS REPLACED BY AN INCORRECT TYPE
DISPOSE OF USED BATTERIES ACCORDING TO THE INSTRUCTIONS

DISPENSER INSTALLATION

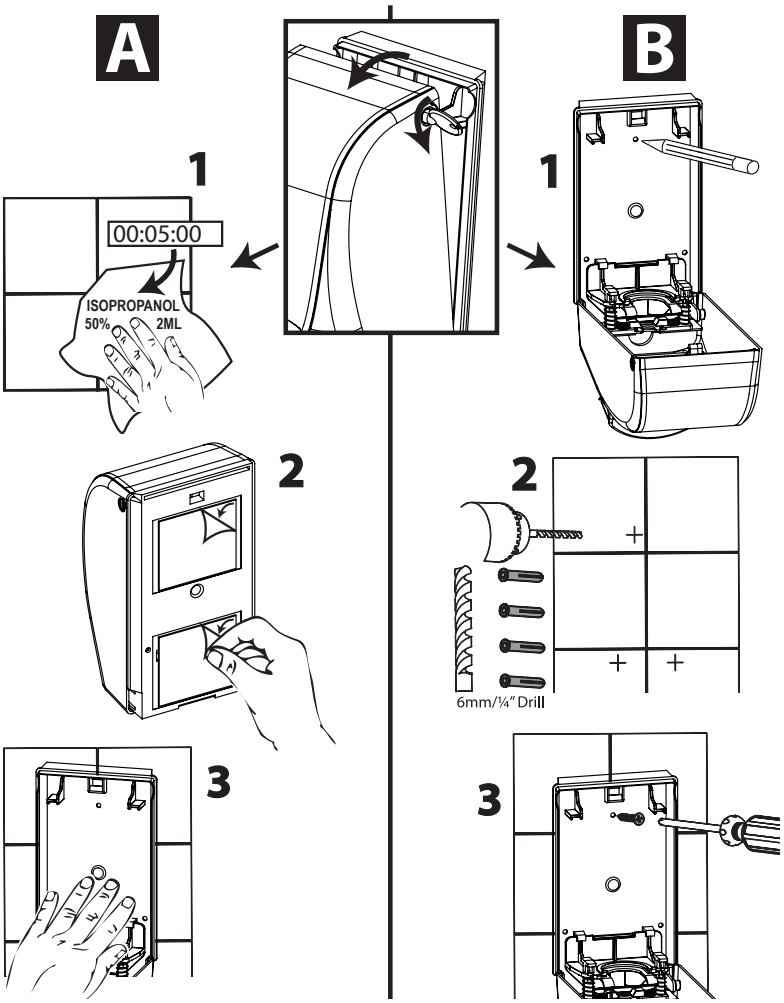

FCC COMPLIANCE INFORMATION

This device complies with Part 15 of the FCC Rules. Operation is subject to the following two conditions: (1) this device may not cause harmful interference, and (2) this device must accept any interference received, including interference that may cause undesired operation.

The user is cautioned that changes or modifications not expressly approved by the manufacturer could void the user's authority to operate the equipment.

This equipment has been tested and found to comply with the limits for a Class B digital device, pursuant to part 15 of the FCC Rules. These limits are designed to provide reasonable protection against harmful interference in a residential installation. This equipment generates, uses, and can radiate radio frequency energy and, if not installed and used in accordance with the instructions, may cause harmful interference to radio communications.

However, there is no guarantee that interference will not occur in a particular installation. If this equipment does cause harmful interference to radio or television reception, which can be determined by turning the equipment off and on, the user is encouraged to try to correct the interference by one or more of the following measures:

- Reorient or relocate the receiving antenna.
- Increase the separation between the equipment and receiver.
- Connect the equipment into an outlet on circuit different from that to which the receiver is connected.
- Consult the dealer or an experienced radio/TV technician for help and for additional suggestions

CONTACT DETAILS

For all product enquiries please contact your local DEB company.
Full contact details can be found at:

www.debgroup.com

The world's leading away from home skin care system company