GV58LAU User Manual

GSM/GPRS/LTE Cat4/WCDMA GNSS Tracker

TRACGV58LAUUM001

Version: 1.00

Driving Smarter IoT

www. queclink .com

Document Title	GV58LAU User Manual
Revision	1.00
Date	August 29, 2022
Status	Release
Document Control ID	TRACGV58LAUUM001

General Notes

Queclink offers this information as a service to its customers, to support application and engineering efforts that use the products designed by Queclink. The information provided is based upon requirements specifically provided to Queclink by the customers. Queclink has not undertaken any independent search for additional relevant information, including any information that may be in the customer's possession. Furthermore, system validation of this product designed by Queclink within a larger electronic system remains the responsibility of the customer or the customer's system integrator. All specifications supplied herein are subject to change.

Copyright

This document contains proprietary technical information which is the property of Queclink Wireless Solutions Co., Ltd. The copying of this document, distribution to others, and communication of the contents thereof, are forbidden without express authority. Offenders are liable to the payment of damages. All rights are reserved in the event of a patent grant or registration of a utility model or design. All specifications supplied herein are subject to change without notice at any time.

Queclink Confidential

Contents

Contents .....
2Table Index .....
3Figure Index.....
40. Revision History.....
51. Introduction .....
6
1.1. GV58LAU Product.....6
1.2. Reference 6
1.3. Terms and Abbreviations.....6
2. Product Overview.....7
2.1. Appearance 7
2.2. Interface Definition 7
2.3. LED Description 8
2.4. Power Connection.....9
2.5. Ignition Detection.....9
2.6. Digital Output.....10
2.7. Digital Input/Digital Output.....11
3. Get Started 12
3.1. Parts List 12
3.2. GV58LAU External Cable Interface 12
3.3. Turn on/Turn off 13
3.4. Open the Case 13
3.5. Install a SIM Card.....13
3.6. Install the Internal Battery 14
3.7. Close the Case 14
3.8. Motion Sensor Direction 15
4. Troubleshooting and Safety Information 16
4.1. Troubleshooting 16
4.2. Safety Information.....16
5. FCC Caution 17

Queclink Confidential

Table Index

Table 1: GV58LAU Product 6
Table 2: GV58LAU Protocol Reference 6
Table 3: Terms and Abbreviations 6
Table 4: Description of 6-PIN Connections 8
Table 5: LED Description 8
Table 6: Electrical Characteristics of Ignition Detection 9
Table 7: Electrical Characteristics of Digital Output 10
Table 8: Parts List 12
Table 9: GV58LAU User Cable Color Definition 12
Table 10: Solutions to Possible Trouble 16

Queclink Confidential

Figure Index

Figure 1: Appearance of GV58LAU 7
Figure 2: 6-PIN Wire Harness of GV58LAU 7
Figure 3: Typical Power Connection 9
Figure 4: Typical Ignition Detection 9
Figure 5: Digital Output Internal Drive Circuit 10
Figure 6: Typical Connection with Relay 10
Figure 7: Digital Input/Digital Output Connection 11
Figure 8: Open the Case 13
Figure 9: SIM Card Installation 13
Figure 10: Battery Installation 14
Figure 11: Close the Case 14
Figure 12: Motion Sensor Direction 15

Queclink Confidential

0. Revision History

Version	Date	Author	Description of Change
1.00	August 29, 2022	Nancy Yin	Initial.

Queclink Confidential

1. Introduction

The GV58LAU is a compact GNSS tracker designed for a wide variety of vehicle tracking applications. It has multiple I/O interfaces that can be used for monitoring or controlling external devices. The GV58LAU supports various bands of LTE CAT4/WCDMA/GSM used by Latin America cellular operators. The built-in GPS receiver has superior sensitivity and fast initial positioning. Its built-in 3-axis accelerometer allows motion detection and sophisticated power management algorithms extend battery life. System integration is straightforward as complete documentation is provided for the full featured @Track protocol. The @Track protocol supports a wide variety of reports including emergency alarm, Geo-fence boundary crossings, external power supply monitoring and position reports.

1.1. GV58LAU Product

Table 1: GV58LAU Product

Model No.	Technology	Operating Band (MHz)
GV58LAU	LTE CAT4/WCDMA /GSM	LTE FDD: B1/B2/B3/B4/B5/B7/B8/B28 LTE TDD: B40 WCDMA: B1/B2/B5/B8 GSM: 850/900/1800/1900 MHz

1.2. Reference

Table 2: GV58LAU Protocol Reference

SN	Document Name	Remark
[1]	GV58LAU @Track Air Interface Protocol	The air protocol interface between GV58LAU and the backend server.

1.3. Terms and Abbreviations

Table 3: Terms and Abbreviations

Abbreviation	Description
AIN	Analog Input
DIN	Digital Input
DOUT	Digital Output
GND	Ground
RXD	Receive Data
TXD	Transmit Data

Queclink Confidential

2. Product Overview

2.1. Appearance

Figure 1: Appearance of GV58LAU

2.2. Interface Definition

GV58LAU has a 6-PIN interface connector. It contains the connections for power, and I/O. The sequence and definition of the 6-PIN connector are shown in the following figure:

Figure 2: 6-PIN Wire Harness of GV58LAU

Queclink Confidential

Table 4: Description of 6-PIN Connections

Index	Description	Remark
1	Orange[IN1/OUT3]	Negative trigger input or 1 digital output, open collector/drain, maximum output current 150mA
2	Yellow[OUT2]	Digital output, Open drain, 150mA max
3	Green [OUT1]	Digital output with internal latch circuit, Open drain, 150mA max
4	White [IGN]	Ignition input, positive trigger
5	Black [GND]	GND
6	Red [VIN]	External DC power input, 8V-32V

2.3. LED Description

GV58LAU has three status LEDs: CELL LED, PWR LED and GNSS LED.

Table 5: LED Description

LED	Device Status	LED Status
GNSS	GNSS chip is powered off.	OFF
	GNSS sends no data or data format error occurs.	Slow flashing
	GNSS chip is searching GNSS information.	Fast flashing
	GNSS chip has gotten GNSS information.	ON
CELL	The device is searching network.	Fast flashing
	The device has been registered on the network.	Slow flashing
	SIM card needs pin code to unlock.	ON
PWR	No external power and internal battery voltage is lower than 3.5V.	OFF
	No external power and internal battery voltage is below 3.65V.	Slow flashing
	The external power supply has been connected to the device and the internal battery of the device is charging.	Fast flashing
	The external power supply has been connected to the device and the internal battery of the device is fully charged.	ON

Note:

1. CELL LED, PWR LED and GNSS LED can be configured to be turned off after a period time by using the configuration tool.
2. Fast flashing: About 100ms ON/ 200ms OFF.
3. Slow flashing: About 200ms ON/ 1000ms OFF.

Queclink Confidential

2.4. Power Connection

VIN(Red) and GND(Black) are the power input pins. The input voltage range for this device is from 8V to 32V. The device is designed to be installed in vehicles that operate on 12V or 24V vehicle without the need for external transformers.

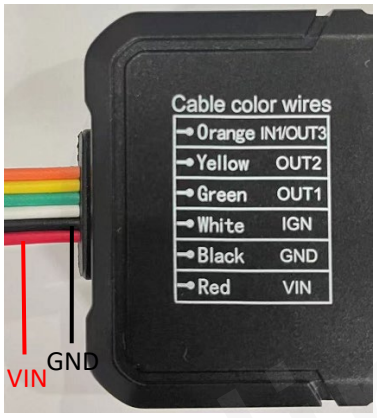

Figure 3: Typical Power Connection

2.5. Ignition Detection

Table 6: Electrical Characteristics of Ignition Detection

Logical State	Electrical State
Active	5.0V to 32V
Inactive	0V to 3V or Open

Figure 4: Typical Ignition Detection

IGN(White) is used for ignition detection. It is strongly recommended to connect this pin to the ignition key “RUN” position as shown above.
An alternative to connecting to the ignition switch is to find a non-permanent power source that

is only available when the vehicle is running, for example, the power source for the FM radio. IGN signal can be configured to start transmitting information to the backend server when the ignition is on, and enter power saving mode when the ignition is off.

2.6. Digital Output

There are two digital outputs on GV58LAU. All two digital outputs are of open drain type and the maximum drain current is 150mA.

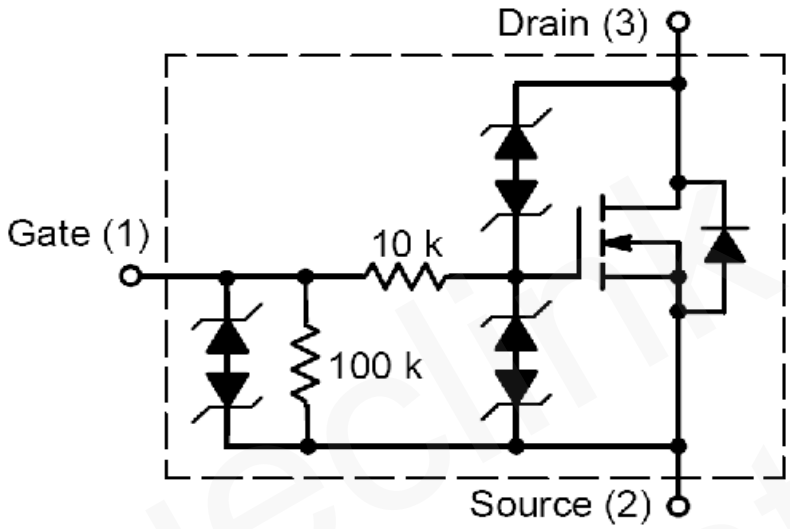

Figure 5: Digital Output Internal Drive Circuit

Table 7: Electrical Characteristics of Digital Output

Logical State	Electrical Characteristics
Enable	<1.5V @150mA
Disable	Open drain

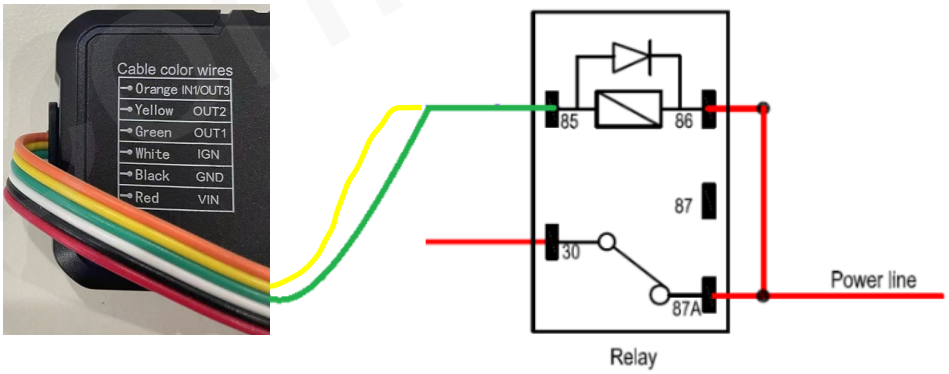

Figure 6: Typical Connection with Relay

2.7. Digital Input/Digital Output

There is one special I/O can be configured as a digital input or a digital output with 150mA max drive current.

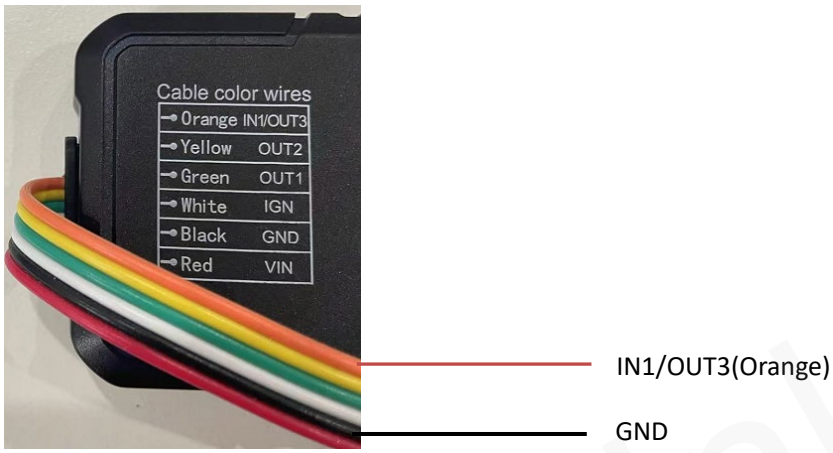

Figure 7: Digital Input/Digital Output Connection

Queclink Confidential

3. Get Started

3.1. Parts List

Table 8: Parts List

Name	Picture
GV58LAU Locator	86.7mm*46.4mm*18.1mm
Data_Cable_M_V4 (Optional)	

3.2. GV58LAU External Cable Interface

Table 9: GV58LAU User Cable Color Definition

Definition	Color	PIN No.	Cable
IN1/OUT3	Orange	1	
OUT2	Yellow	2	
OUT1	Green	3	
IGN	White	4	
GND	Black	5	
VIN	Red	6	

3.3. Turn on/Turn off

- Turn on: Connect the device to the external power, and it will be turned on automatically. CELL LED light will be on.
- Turn off: Disconnect the device from the external power, and it will be turned off.

3.4. Open the Case

Figure 8: Open the Case

Insert the triangular-pry-opener into the gap of the case as shown in the figure, and push the opener up until the case is unsnapped. The GV58LAU device has 4 gaps.

When GV58LAU is shipped, the case of GV58LAU is not closed completely, which allows the user to open it relatively easily for SIM card and battery installation.

3.5. Install a SIM Card

Figure 9: SIM Card Installation

Open the case and ensure the unit is not powered. Slide the holder up to open the SIM card holder. Insert the SIM card into the holder as shown above with the gold-colored contact area facing down. Take care to align the cut mark. Close the SIM card holder. Close the case.

3.6. Install the Internal Battery

Figure 10: Battery Installation

3.7. Close the Case

Figure 11: Close the Case

Put the upper cover on the lower cover, and press the covers to make sure they are closed completely.

3.8. Motion Sensor Direction

GV58LAU has an internal 3-axis accelerometer supporting driving behavior monitoring, crash detection and motion detection. The following figure shows the directions of the motion sensor.

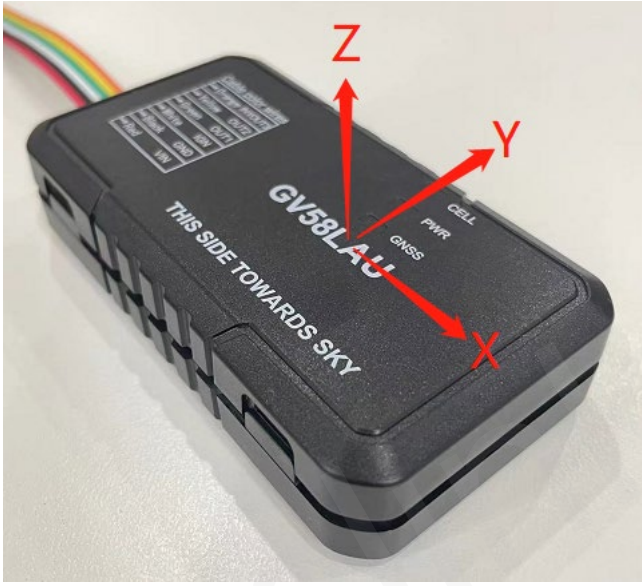

Figure 12: Motion Sensor Direction

Note:

1. The opposite direction of the cable bundle is the positive direction of the X-axis.
2. The Z-axis is in the positive direction above the front housing surface.
3. The positive directions of the three axes are perpendicular to each other, as shown in the above figure.

Queclink Confidential

4. Troubleshooting and Safety Information

4.1. Troubleshooting

Table 10: Solutions to Possible Trouble

Trouble	Possible Reason	Solution
The CELL LED always flashes quickly after the device is turned on.	The signal is too weak, and the device cannot be registered to the network.	Please move the device to places with good GSM coverage.
Messages cannot be reported to the backend server.	The IP address or port of the backend server is wrong.	Make sure the IP address for the backend server is an identified address on the Internet.
Unable to power off the device.	It is unable to power off the device if the charger is connected.	Disconnect charger, and try again.
The device cannot get successful GNSS fix.	The GNSS signal is weak.	Please move the device to a place with open sky.
		It is better to let the top surface (the surface with LED indicator) face the sky.

4.2. Safety Information

- Please do not disassemble the device by yourself.
- Please do not put the device on overheated or too humid place, and avoid exposure to direct sunlight. Too high temperature will damage the device or even cause battery explosion.
- Please do not use GV58LAU on the airplane or near medical equipment.

Queclink Confidential

5. FCC Caution

a、§ 15.19 Labeling requirements.

This device complies with part 15 of the FCC Rules. Operation is subject to the following two conditions: (1) This device may not cause harmful interference, and (2) this device must accept any interference received, including interference that may cause undesired operation.

b、§ 15.21 Changes or modification warning.

Any Changes or modifications not expressly approved by the party responsible for compliance could void the user's authority to operate the equipment.

c、§ 15.105 Information to the user.

Note: This equipment has been tested and found to comply with the limits for a Class B digital device, pursuant to part 15 of the FCC Rules. These limits are designed to provide reasonable protection against harmful interference in a residential installation. This equipment generates uses and can radiate radio frequency energy and, if not installed and used in accordance with the instructions, may cause harmful interference to radio communications. However, there is no guarantee that interference will not occur in a particular installation. If this equipment does cause harmful interference to radio or television reception, which can be determined by turning the equipment off and on, the user is encouraged to try to correct the interference by one or more of the following measures:

-Reorient or relocate the receiving antenna.

-Increase the separation between the equipment and receiver.

-Connect the equipment into an outlet on a circuit different from that to which the receiver is connected.

-Consult the dealer or an experienced radio/TV technician for help.

*RF warning for Mobile device:

This equipment complies with FCC radiation exposure limits set forth for an uncontrolled environment. This equipment should be installed and operated with minimum distance 20cm between the radiator & your body.