SAR TEST REPORT

Test Report No. : 10279740H-A-R1

Applicant	:	**KONICA MINOLTA, Inc.**
Type of Equipment	:	**AeroDR SYSTEM 2**
Model No.	:	**AeroDR_P-51**
FCC ID	:	**YR7AERODRP5**
Test regulation	:	**FCC47CFR 2.1093**
Test Result	:	**Complied**
Reported SAR(1g) Value		**The highest reported SAR(1g)** **WLAN 11b/g/n** Body : 0.374W/kg **WLAN 11a/n** Body : 1.127W/kg

1. This test report shall not be reproduced in full or partial, without the written approval of UL Japan, Inc.
2. The results in this report apply only to the sample tested.
3. This sample tested is in compliance with the limits of the above regulation.
4. The test results in this report are traceable to the national or international standards.
5. This test report must not be used by the customer to claim product certification, approval, or endorsement by NVLAP, NIST, or any agency of the Federal Government.
6. This report is a revised version of 10279740H-A. 10279740H-A is replaced with this report.

Date of test: July 24 to August 1, 2014

Representative test engineer:

Hisayoshi Sato
Engineer
Consumer Technology Division

Approved by :

Takahiro Hatakeda
Leader
Consumer Technology Division

NVLAP LAB CODE: 200572-0

This laboratory is accredited by the NVLAP LAB CODE 200572-0, U.S.A. The tests reported herein have been performed in accordance with its terms of accreditation.
*As for the range of Accreditation in NVLAP, you may refer to the WEB address,
http://www.ul.com/japan/jpn/pages/services/emc/about/mark1/index.jsp#nvlap

REVISION HISTORY

Original Test Report No.: 10279740H-A

Revision	Test report No.	Date	Page revised	Contents
- (Original)	10279740H-A	August 19, 2014	-	-
1	10279740H-A-R1	September 2, 2014	P. 179, 180	Correction of Appendix 4 clause1 and 2

CONTENTS PAGE

SECTION 1: Customer information **4**
SECTION 2: Equipment under test (E.U.T.) **4**
2.1 Identification of E.U.T. 4
2.2 Product description 4
SECTION 3 : Test standard information **5**
3.1 Test Specification 5
3.2 Procedure 5
3.3 Exposure limit 6
3.4 Test Location 6
SECTION 4 : Test result **7**
4.1 Stand-alone SAR result 7
SECTION 5 : Description of the operating mode **8**
5.1 Output power operating modes 8
5.2 Output power measurement results 9
5.3 SAR testing operating modes 17
5.4 Confirmation after SAR testing 19
SECTION 6 SAR test exclusion considerations **20**
6.1 Standalone SAR test exclusion considerations 20
SECTION 7: Description of the Body setup **26**
7.1 Test position for Body setup 26
SECTION 8 : Test surrounding **27**
8.1 Measurement uncertainty 27
SECTION 9 : Measurement results **29**
9.1 WLAN Body SAR (2.4G) 29
9.2 WLAN Body SAR (5G) 32
SECTION 10 Test instruments **41**
APPENDIX 1 : SAR Measurement data **42**
1. Evaluation procedure 42
2. Measurement data 43
APPENDIX2 : System Check **104**
1. System check result Body 2450MHz 104
2. System Check Dipole (D2450V2,S/N:713) 107
3. System check result Body 5200MHz 115
4. System check result Body 5300MHz 118
5. System check result Body 5600MHz 121
6. System check result Body 5800MHz 129
7. System Check Dipole (D5GHzV2,S/N:1020) 134
8. System check uncertainty 150
APPENDIX 3 : System specifications **152**
1. Configuration and peripherals 152
2. Specifications 153
3. Dosimetric E-Field Probe Calibration (EX3DV4, S/N: 3922) 157
4. Dosimetric E-Field Probe Calibration (EX3DV4, S/N: 3825) 168
APPENDIX 4: Photographs of test setup **179**
1. Photographs of EUT 179
2. Antenna position 180
3. Photographs of setup 181

SECTION 1: Customer information

Company Name	:	KONICA MINOLTA, Inc.
Address	:	1, Sakura-machi, Hino-shi, Tokyo, Japan
Telephone Number	:	+81-42-589-8429
Facsimile Number	:	+81-42-589-8053
Contact Person	:	Masayoshi Inoue

SECTION 2: Equipment under test (E.U.T.)

2.1 Identification of E.U.T.

Type of Equipment	:	AeroDR SYSTEM 2
Model No.	:	AeroDR_P-51
Serial No.	:	A6CA-S0016
Rating	:	Li-ion capacitor (Installed in Aero DR P-51) DC 3.3V
Receipt Date of Sample	:	July 21, 2014
Country of Mass-production	:	Japan
Condition of EUT	:	Engineering prototype (Not for Sale: This sample is equivalent to mass-produced items.)
Modification of EUT	:	No Modification by the test lab

2.2 Product description

General Specification

Clock frequency(ies) in the system	:	532MHz

Radio Specification

Radio Type	:	Transceiver
Method of Frequency Generation	:	Synthesizer
Power Supply (inner)	:	DC3.3V

Specification of Wireless LAN (IEEE802.11b/g/a/n-20)

Type of radio	IEEE802.11b	IEEE802.11g	IEEE802.11a	IEEE802.11n (20 M band)
Frequency of operation	2412-2462MHz	2412-2462MHz	5180-5320MHz 5500-5700MHz 5745-5825MHz	2412-2462MHz 5180-5320MHz 5500-5700MHz 5745-5825MHz
Type of modulation	DSSS (CCK, DQPSK, DBPSK)	OFDM-CCK (64QAM, 16QAM, QPSK, BPSK)	OFDM (64QAM, 16QAM, QPSK, BPSK)	
Channel spacing	5MHz		20MHz	2.4GHz band 5MHz 5GHz band 20MHz
Antenna type	PIFA Type			
Antenna Gain	2.4GHz band -Main Antenna: -2.27dBi -Sub Antenna: -1.99dBi 5GHz band -Main Antenna: -2.39dBi -Sub Antenna: -1.41dBi			
Antenna Connector type	U.FL Type			

SECTION 3 : Test standard information

3.1 Test Specification

Title : **FCC47CFR 2.1093**
Radiofrequency radiation exposure evaluation: portable devices.
: **IEEE Std 1528-2003:**
IEEE Recommended Practice for Determining the Peak Spatial-Average Specific Absorption Rate (SAR) in the Human Head from Wireless Communications Devices.

: **Published RF exposure KDB procedures**

☑	**KDB447498D01(v05r02)**	Mobile and Portable Device RF Exposure Procedures and Equipment Authorization Policies
☐	**KDB447498D02(v02)**	SAR Measurement Procedures for USB Dongle Transmitters
☐	**KDB648474D04(v01r02)**	SAR Evaluation Considerations for Wireless Handsets
☐	**KDB941225D01(v02)**	SAR Measurement Procedures for 3G Devices
☐	**KDB941225D02(v02r02)**	3GPP R6 HSPA and R7 HSPA+ SAR Guidance
☐	**KDB941225D03(v01)**	Recommended SAR Test Reduction Procedures for GSM/GPRS/EDGE
☐	**KDB941225D04(v01)**	Evaluating SAR for GSM/(E)GPRS Dual Transfer Mode
☐	**KDB941225D05(v02r03)**	SAR for LTE Devices
☐	**KDB941225D06(v01r01)**	SAR test procedures for devices incorporating SAR Evaluation Procedures for Portable Devices with Wireless Router Capabilities (Hot Spot SAR)
☐	**KDB941225D07(v01r01)**	SAR Evaluation Procedures for UMPC Mini-Tablet Devices
☐	**KDB616217D04(v01r01)**	SAR Evaluation Considerations for Laptop, Notebook, Netbook and Tablet Computers
☑	**KDB865664D01(v01r03)**	SAR Measurement Requirements for 100MHz to 6 GHz
☑	**KDB248227D01(v01r02)**	SAR Measurement Procedures for 802.11a//b/g Transmitters

Reference

[1]ANSI, ANSI/IEEE C95.1-1992: IEEE Standard for Safety Levels with Respect to Human Exposure to Radio Frequency Electromagnetic Fields, 3 kHz to 300 GHz, The Institute of Electrical and Electronics Engineers, Inc., New York, NY 10017, 1992.
[2]SPEAG uncertainty document (AN 15-7/AN19-17) for DASY 5 System from SPEAG (Schmid & Partner Engineering AG).
[3] IEEE Std 1528-2013: IEEE Recommended Practice for Determining the Peak Spatial-Average Specific Absorption Rate (SAR) in the Human Head from Wireless Communications Devices: Measurement Techniques.
(The reference for Uncertainty in SAR correction for deviations in permittivity and conductivity, in clause E.3.2.)

3.2 Procedure

Transmitter	**WLAN**
Test Procedure	Published RF exposure KDB procedures
	SAR
Category	FCC47CFR 2.1093
Note: UL Japan, Inc. 's SAR Work Procedures 13-EM-W0429 and 13-EM-W0430	

3.3 Exposure limit

(A) Limits for Occupational/Controlled Exposure (W/kg)

Spatial Average (averaged over the whole body)	Spatial Peak (averaged over any 1g of tissue)	Spatial Peak (hands/wrists/feet/ankles averaged over 10g)
0.4	8.0	20.0

(B) Limits for General population/Uncontrolled Exposure (W/kg)

Spatial Average (averaged over the whole body	Spatial Peak (averaged over any 1g of tissue)	Spatial Peak (hands/wrists/feet/ankles averaged over 10g)
0.08	1.6	4.0

Occupational/Controlled Environments: are defined as locations where there is exposure that may be incurred by people who are aware of the potential for exposure, (i.e. as a result of employment or occupation).

General Population/Uncontrolled Environments: are defined as locations where there is the exposure of individuals who have no knowledge or control of their exposure.

NOTE:GENERAL POPULATION/UNCONTROLLED EXPOSURE
SPATIAL PEAK(averaged over any 1g of tissue) LIMIT
1.6 W/kg

3.4 Test Location

*Shielded room for SAR testings
UL Japan, Inc. Ise HQ EMC Lab. *NVLAP Lab. code: 200572-0
4383-326 Asama-cho, Ise-shi, Mie-ken 516-0021 JAPAN
Telephone : +81 596 24 8999 Facsimile : +81 596 24 8124

SECTION 4 : Test result

4.1 Stand-alone SAR result

Reported SAR
Measured SAR is scaled to the maximum tune-up tolerance limit by the following formulas.
Reported SAR= Maximum tune-up tolerance limit [mW] / Measured power [mW] · Measured SAR [W/kg]
Maximum tune-up tolerance limit is by the specification from a customer.

Mode	Frequency	Measured power [mW]*1	Maximum tune-up tolerance limit [mW]	Measured SAR [W/kg]	Reported SAR [W/kg]
WLAN 11n-20	2462MHz	9.33	12.59	0.277	0.374
WLAN 11n-20	5640MHz	7.80	10.00	0.879	1.127

Note
*1 The sample used by the SAR test is within the tune-up tolerance but not more than 2 dB lower than the maximum tune-up tolerance limit. That is, measured power is included the tune-up tolerance range.

WLAN Maximum tune-up tolerance limit

Mode	Maximum tune-up tolerance limit [dBm]	Maximum tune-up tolerance limit [mW]
WLAN 11b	11	12.59
WLAN 11g	11	12.59
WLAN 11n (2.4G)	11	12.59
WLAN 11a 5.2GHz and 5.3GHz Band	11	12.59
WLAN 11a 5.6GHz and 5.8GHz Band	10	10.00
WLAN 11n (5G) 5.2GHz and 5.3GHz Band	11	12.59
W LAN 11n (5G) 5.6GHz and 5.8GHz Band	10	10.00

SECTION 5 : Description of the operating mode

5.1 Output power operating modes

Mode	Frequency Band	Test Frequency	Modulation
IEEE802.11b	2412-2462MHz	2412MHz (1ch) 2437MHz(6ch) 2462MHz(11ch)	DSSS (DBPSK.DQPSK.CCK)
IEEE802.11g IEEE802.11n20 (2.4G)	2412-2462MHz	2412MHz (1ch) 2437MHz(6ch) 2462MHz(11ch)	OFDM (BPSK.QPSK.16QAM,64QAM)
IEEE802.11a IEEE802.11n20 (5G)	5180-5240MHz	5180MHz (36ch) 5200MHz (40ch) 5220MHz (44ch) 5240MHz (48ch)	
	5260-5320MHz	5260MHz (52ch) 5280MHz (56ch) 5300MHz (60ch) 5320MHz (64ch)	
	5500-5700MHz	5500MHz (100ch) 5520MHz (104ch) 5540MHz (108ch) 5560MHz (112ch) 5580MHz (116ch) 5600MHz (120ch) 5620MHz (124ch) 5640MHz (128ch) 5660MHz (132ch) 5680MHz (136ch) 5700MHz (140ch)	
	5745-5825MHz	5745MHz (149ch) 5765MHz (153ch) 5785MHz (157ch) 5805MHz (161ch) 5825MHz (165ch)	
WLAN			
*Power of the EUT was set by the software as follows; Software / version: Wireless authentication test tool / 1.0.0.0 Power setting: 10dBm *The above setting is the worst case. Any conditions under the normal use do not exceed the condition of setting. In addition, end users cannot change the settings of the output power of the product.			

5.2 Output power measurement results

Output power measurement for WLAN

1) WLAN (11b/g/n (2.4G))

Main Antenna

[IEEE802.11b] Rate Check

Rate [Mbps]	Freq. [MHz]	Reading [dBm] AVG	Cable Loss [dB]	Atten. [dB]	Result [dBm] AVG	Result [mW] AVG
1.0	2412	-2.27	2.00	9.90	9.63	9.18
2.0	2412	-2.29	2.00	9.90	9.61	9.14
5.5	2412	-2.33	2.00	9.90	9.57	9.06
11.0	2412	-2.36	2.00	9.90	9.54	8.99

:Worst data rate

IEEE802.11b 1Mbps

Ch	Frequency [MHz]	P/M Reading AVG	Cable Loss [dB]	Atten. [dB]	Result [dBm] AVG	Result [mW] AVG
1	2412	-2.27	2.00	9.90	9.63	9.18
6	2437	-2.22	2.00	9.90	9.68	9.29
11	2462	-1.90	2.00	9.90	10.00	10.00

:SAR test channel

[IEEE802.11g] Rate Check

Rate [Mbps]	Freq. [MHz]	Reading [dBm] AVG	Cable Loss [dB]	Atten. [dB]	Result [dBm] AVG	Result [mW] AVG
6.0	2412	-2.45	2.00	9.90	9.45	8.81
9.0	2412	-2.54	2.00	9.90	9.36	8.63
12.0	2412	-2.58	2.00	9.90	9.32	8.55
18.0	2412	-2.62	2.00	9.90	9.28	8.47
24.0	2412	-2.68	2.00	9.90	9.22	8.36
36.0	2412	-2.76	2.00	9.90	9.14	8.20
48.0	2412	-2.91	2.00	9.90	8.99	7.93
54.0	2412	-2.94	2.00	9.90	8.96	7.87

:Worst data rate

[IEEE802.11n-20] Rate Check

Rate [Mbps]	Freq. [MHz]	Reading [dBm] AVG	Cable Loss [dB]	Atten. [dB]	Result [dBm] AVG	Result [mW] AVG
MCS0	2412	-2.57	2.00	9.90	9.33	8.57
MCS1	2412	-2.65	2.00	9.90	9.25	8.41
MCS2	2412	-2.73	2.00	9.90	9.17	8.26
MCS3	2412	-2.79	2.00	9.90	9.11	8.15
MCS4	2412	-2.89	2.00	9.90	9.01	7.96
MCS5	2412	-3.00	2.00	9.90	8.90	7.76
MCS6	2412	-3.06	2.00	9.90	8.84	7.66
MCS7	2412	-3.09	2.00	9.90	8.81	7.60

:Worst data rate

IEEE802.11n-20 MCS0

Ch	Frequency [MHz]	Reading [dBm] AVG	Cable Loss [dB]	Atten. [dB]	Result [dBm] AVG	Result [mW] AVG
1	2412	-2.57	2.00	9.90	9.33	8.57
6	2437	-2.33	2.00	9.90	9.57	9.06
11	2462	-2.23	2.00	9.90	9.67	9.27

:SAR test channel

Sample Calculation:

Result = Reading + Cable Loss + Attenuator

Sub Antenna

[IEEE802.11b] Rate Check

Rate [Mbps]	Freq. [MHz]	Reading [dBm] AVG	Cable Loss [dB]	Atten. [dB]	Result [dBm] AVG	Result [mW] AVG
1.0	2412	-2.24	2.00	9.90	9.66	9.25
2.0	2412	-2.27	2.00	9.90	9.63	9.18
5.5	2412	-2.29	2.00	9.90	9.61	9.14
11.0	2412	-2.33	2.00	9.90	9.57	9.06

:Worst data rate

IEEE802.11b 1Mbps

Ch	Frequency [MHz]	P/M Reading AVG	Cable Loss [dB]	Atten. [dB]	Result [dBm] AVG	Result [mW] AVG
1	2412	-2.24	2.00	9.90	9.66	9.25
6	2437	-2.12	2.00	9.90	9.78	9.51
11	2462	-1.88	2.00	9.90	10.02	10.05

:SAR test channel

[IEEE802.11g] Rate Check

Rate [Mbps]	Freq. [MHz]	Reading [dBm] AVG	Cable Loss [dB]	Atten. [dB]	Result [dBm] AVG	Result [mW] AVG
6.0	2412	-2.43	2.00	9.90	9.47	8.85
9.0	2412	-2.49	2.00	9.90	9.41	8.73
12.0	2412	-2.51	2.00	9.90	9.39	8.69
18.0	2412	-2.58	2.00	9.90	9.32	8.55
24.0	2412	-2.64	2.00	9.90	9.26	8.43
36.0	2412	-2.76	2.00	9.90	9.14	8.20
48.0	2412	-2.88	2.00	9.90	9.02	7.98
54.0	2412	-2.92	2.00	9.90	8.98	7.91

:Worst data rate

[IEEE802.11n-20] Rate Check

Rate [Mbps]	Freq. [MHz]	Reading [dBm] AVG	Cable Loss [dB]	Atten. [dB]	Result [dBm] AVG	Result [mW] AVG
MCS0	2412	-2.54	2.00	9.90	9.36	8.63
MCS1	2412	-2.62	2.00	9.90	9.28	8.47
MCS2	2412	-2.68	2.00	9.90	9.22	8.36
MCS3	2412	-2.76	2.00	9.90	9.14	8.20
MCS4	2412	-2.87	2.00	9.90	9.03	8.00
MCS5	2412	-2.97	2.00	9.90	8.93	7.82
MCS6	2412	-3.02	2.00	9.90	8.88	7.73
MCS7	2412	-3.07	2.00	9.90	8.83	7.64

:Worst data rate

IEEE802.11n-20 MCS0

Ch	Frequency [MHz]	Reading [dBm] AVG	Cable Loss [dB]	Atten. [dB]	Result [dBm] AVG	Result [mW] AVG
1	2412	-2.57	2.00	9.90	9.33	8.56
6	2437	-2.22	2.00	9.90	9.68	9.29
11	2462	-2.20	2.00	9.90	9.70	9.33

:SAR test channel

Sample Calculation:
Result = Reading + Cable Loss + Attenuator

2) WLAN (11a/n (5G))
5.2GHz
Main Antenna

[IEEE802.11a] Rate Check

Rate [Mbps]	Freq. [MHz]	Reading [dBm] AVG	Cable Loss [dB]	Atten. [dB]	Result [dBm] AVG	Result [mW] AVG
6.0	5180	-3.17	3.21	9.98	10.02	10.05
9.0	5180	-3.25	3.21	9.98	9.94	9.86
12.0	5180	-3.27	3.21	9.98	9.92	9.82
18.0	5180	-3.32	3.21	9.98	9.87	9.71
24.0	5180	-3.83	3.21	9.98	9.36	8.63
36.0	5180	-3.97	3.21	9.98	9.22	8.36
48.0	5180	-3.97	3.21	9.98	9.22	8.36
54.0	5180	-4.01	3.21	9.98	9.18	8.28

:Worst data rate

IEEE802.11a 6Mbps

Ch	Frequency [MHz]	P/M Reading AVG	Cable Loss [dB]	Atten. [dB]	Result [dBm] AVG	Result [mW] AVG
36	5180	-3.17	3.21	9.98	10.02	10.05
40	5200	-3.50	3.22	9.98	9.70	9.33
44	5220	-3.14	3.22	9.97	10.05	10.12
48	5240	-2.88	3.22	9.97	10.31	10.74

:SAR test channel

[IEEE802.11n-20] Rate Check

Rate [Mbps]	Freq. [MHz]	Reading [dBm] AVG	Cable Loss [dB]	Atten. [dB]	Result [dBm] AVG	Result [mW] AVG
MCS0	5180	-3.40	3.21	9.98	9.79	9.53
MCS1	5180	-3.49	3.21	9.98	9.70	9.33
MCS2	5180	-3.53	3.21	9.98	9.66	9.25
MCS3	5180	-4.05	3.21	9.98	9.14	8.20
MCS4	5180	-4.18	3.21	9.98	9.01	7.96
MCS5	5180	-4.28	3.21	9.98	8.91	7.78
MCS6	5180	-4.31	3.21	9.98	8.88	7.73
MCS7	5180	-4.33	3.21	9.98	8.86	7.69

:Worst data rate

IEEE802.11n-20 MCS0

Ch	Frequency [MHz]	Reading [dBm] AVG	Cable Loss [dB]	Atten. [dB]	Result [dBm] AVG	Result [mW] AVG
36	5180	-3.40	3.21	9.98	9.79	9.53
40	5200	-3.65	3.22	9.98	9.55	9.02
44	5220	-3.38	3.22	9.97	9.81	9.57
48	5240	-3.10	3.22	9.97	10.09	10.21

:SAR test channel

Sample Calculation:

Sub Antenna

[IEEE802.11a] Rate Check

Rate [Mbps]	Freq. [MHz]	Reading [dBm] AVG	Cable Loss [dB]	Atten. [dB]	Result [dBm] AVG	Result [mW] AVG
6.0	5180	-3.16	3.21	9.98	10.03	10.07
9.0	5180	-3.21	3.21	9.98	9.98	9.95
12.0	5180	-3.24	3.21	9.98	9.95	9.89
18.0	5180	-3.32	3.21	9.98	9.87	9.71
24.0	5180	-3.85	3.21	9.98	9.34	8.59
36.0	5180	-3.97	3.21	9.98	9.22	8.36
48.0	5180	-4.02	3.21	9.98	9.17	8.26
54.0	5180	-4.06	3.21	9.98	9.13	8.18

:Worst data rate

IEEE802.11a 6Mbps

Ch	Frequency [MHz]	P/M Reading AVG	Cable Loss [dB]	Atten. [dB]	Result [dBm] AVG	Result [mW] AVG
36	5180	-3.16	3.21	9.98	10.03	10.07
40	5200	-3.54	3.22	9.98	9.66	9.25
44	5220	-3.41	3.22	9.97	9.78	9.51
48	5240	-3.22	3.22	9.97	9.97	9.93

:SAR test channel

[IEEE802.11n-20] Rate Check

Rate [Mbps]	Freq. [MHz]	Reading [dBm] AVG	Cable Loss [dB]	Atten. [dB]	Result [dBm] AVG	Result [mW] AVG
MCS0	5180	-3.39	3.21	9.98	9.80	9.55
MCS1	5180	-3.48	3.21	9.98	9.71	9.35
MCS2	5180	-3.56	3.21	9.98	9.63	9.18
MCS3	5180	-4.09	3.21	9.98	9.10	8.13
MCS4	5180	-4.20	3.21	9.98	8.99	7.93
MCS5	5180	-4.29	3.21	9.98	8.90	7.76
MCS6	5180	-4.33	3.21	9.98	8.86	7.69
MCS7	5180	-4.37	3.21	9.98	8.82	7.62

:Worst data rate

IEEE802.11n-20 MCS0

Ch	Frequency [MHz]	Reading [dBm] AVG	Cable Loss [dB]	Atten. [dB]	Result [dBm] AVG	Result [mW] AVG
36	5180	-3.39	3.21	9.98	9.80	9.55
40	5200	-3.74	3.22	9.98	9.46	8.83
44	5220	-3.65	3.22	9.97	9.54	8.99
48	5240	-3.52	3.22	9.97	9.67	9.27

Sample Calculation:
Result = Reading + Cable Loss + Attenuator

:SAR test channel

5.3GHz

Main Antenna

IEEE802.11a 6Mbps

Ch	Frequency [MHz]	P/M Reading AVG	Cable Loss [dB]	Atten. [dB]	Result [dBm] AVG	Result [mW] AVG
52	5260	-3.09	3.23	9.96	10.10	10.23
56	5280	-2.81	3.23	9.96	10.38	10.91
60	5300	-2.47	3.23	9.95	10.71	11.78
64	5320	-2.34	3.24	9.95	10.85	12.16

:SAR test channel

IEEE802.11n-20 MCS0

Ch	Frequency [MHz]	Reading [dBm] AVG	Cable Loss [dB]	Atten. [dB]	Result [dBm] AVG	Result [mW] AVG
52	5260	-3.33	3.23	9.96	9.86	9.68
56	5280	-2.99	3.23	9.96	10.20	10.47
60	5300	-2.65	3.23	9.95	10.53	11.30
64	5320	-2.52	3.24	9.95	10.67	11.67

:SAR test channel

Sample Calculation:

Result = Reading + Cable Loss + Attenuator

Sub Antenna

IEEE802.11a 6Mbps

Ch	Frequency [MHz]	P/M Reading AVG	Cable Loss [dB]	Atten. [dB]	Result [dBm] AVG	Result [mW] AVG
52	5260	-3.54	3.23	9.96	9.65	9.23
56	5280	-3.32	3.23	9.96	9.87	9.71
60	5300	-3.12	3.23	9.95	10.06	10.14
64	5320	-2.98	3.24	9.95	10.21	10.50

:SAR test channel

IEEE802.11n-20 MCS0

Ch	Frequency [MHz]	Reading [dBm] AVG	Cable Loss [dB]	Atten. [dB]	Result [dBm] AVG	Result [mW] AVG
52	5260	-3.82	3.23	9.96	9.37	8.65
56	5280	-3.61	3.23	9.96	9.58	9.08
60	5300	-3.44	3.23	9.95	9.74	9.42
64	5320	-3.25	3.24	9.95	9.94	9.86

Sample Calculation:

Result = Reading + Cable Loss + Attenuator

:SAR test channel

5.6GHz
Main Antenna

IEEE802.11a 6Mbps

Ch	Frequency [MHz]	P/M Reading [dBm] AVG	Cable Loss [dB]	Atten. [dB]	Result [dBm] AVG	Result [mW] AVG
100	5500	-3.95	3.27	9.91	9.23	8.38
104	5520	-3.97	3.27	9.92	9.22	8.36
108	5540	-4.07	3.27	9.92	9.12	8.17
112	5560	-4.19	3.27	9.93	9.01	7.96
116	5580	-4.35	3.26	9.94	8.85	7.67
120	5600	-4.44	3.26	9.94	8.76	7.52
124	5620	-4.60	3.26	9.95	8.61	7.26
128	5640	-4.32	3.26	9.95	8.89	7.74
132	5660	-4.59	3.26	9.95	8.62	7.28
136	5680	-4.48	3.26	9.97	8.75	7.50
140	5700	-4.50	3.25	9.97	8.72	7.45

:SAR test channel

IEEE802.11n-20 MCS0

Ch	Frequency [MHz]	P/M Reading [dBm] AVG	Cable Loss [dB]	Atten. [dB]	Result [dBm] AVG	Result [mW] AVG
100	5500	-3.70	3.27	9.91	9.48	8.87
104	5520	-4.24	3.27	9.92	8.95	7.85
108	5540	-4.25	3.27	9.92	8.94	7.83
112	5560	-4.37	3.27	9.93	8.83	7.64
116	5580	-4.51	3.26	9.94	8.69	7.40
120	5600	-4.61	3.26	9.94	8.59	7.23
124	5620	-4.70	3.26	9.95	8.51	7.10
128	5640	-4.49	3.26	9.95	8.72	7.45
132	5660	-4.77	3.26	9.95	8.44	6.98
136	5680	-4.67	3.26	9.97	8.56	7.18
140	5700	-5.11	3.25	9.97	8.11	6.47

:SAR test channel

Sample Calculation:
Result = Reading + Cable Loss + Attenuator

Sub Antenna

IEEE802.11a 6Mbps

Ch	Frequency [MHz]	P/M Reading [dBm] AVG	Cable Loss [dB]	Atten. [dB]	Result [dBm] AVG	Result [mW] AVG
100	5500	-3.54	3.27	9.91	9.64	9.20
104	5520	-3.52	3.27	9.92	9.67	9.27
108	5540	-3.55	3.27	9.92	9.64	9.20
112	5560	-3.72	3.27	9.93	9.48	8.87
116	5580	-3.92	3.26	9.94	9.28	8.47
120	5600	-4.03	3.26	9.94	9.17	8.26
124	5620	-4.25	3.26	9.95	8.96	7.87
128	5640	-4.01	3.26	9.95	9.20	8.32
132	5660	-4.36	3.26	9.95	8.85	7.67
136	5680	-4.23	3.26	9.97	9.00	7.94
140	5700	-4.19	3.25	9.97	9.03	8.00

:SAR test channel

IEEE802.11n-20 MCS0

Ch	Frequency [MHz]	P/M Reading [dBm] AVG	Cable Loss [dB]	Atten. [dB]	Result [dBm] AVG	Result [mW] AVG
100	5500	-3.33	3.27	9.91	9.85	9.66
104	5520	-3.80	3.27	9.92	9.39	8.69
108	5540	-3.85	3.27	9.92	9.34	8.59
112	5560	-4.02	3.27	9.93	9.18	8.28
116	5580	-4.18	3.26	9.94	9.02	7.98
120	5600	-4.34	3.26	9.94	8.86	7.69
124	5620	-4.53	3.26	9.95	8.68	7.38
128	5640	-4.29	3.26	9.95	8.92	7.80
132	5660	-4.66	3.26	9.95	8.55	7.16
136	5680	-4.49	3.26	9.97	8.74	7.48
140	5700	-5.01	3.25	9.97	8.21	6.62

:SAR test channel

Sample Calculation:
Result = Reading + Cable Loss + Attenuator

5.8GHz

Main Antenna

IEEE802.11a 6Mbps

Ch	Frequency [MHz]	P/M Reading AVG	Cable Loss [dB]	Atten. [dB]	Result [dBm] AVG	Result [mW] AVG
149	5745	-5.18	3.25	9.99	8.06	6.40
153	5765	-5.21	3.25	9.99	8.03	6.35
157	5785	-5.06	3.25	10.00	8.19	6.59
161	5805	-5.01	3.25	10.01	8.25	6.68
165	5825	-4.88	3.24	10.01	8.37	6.87

:SAR test channel

IEEE802.11n-20 MCS0

Ch	Frequency [MHz]	P/M Reading AVG	Cable Loss [dB]	Atten. [dB]	Result [dBm] AVG	Result [mW] AVG
149	5745	-5.34	3.25	9.99	7.90	6.17
153	5765	-5.36	3.25	9.99	7.88	6.14
157	5785	-5.24	3.25	10.00	8.01	6.32
161	5805	-5.23	3.25	10.01	8.03	6.35
165	5825	-5.05	3.24	10.01	8.20	6.61

:SAR test channel

Sample Calculation:

Result = Reading + Cable Loss + Attenuator

Sub Antenna

IEEE802.11a 6Mbps

Ch	Frequency [MHz]	P/M Reading AVG	Cable Loss [dB]	Atten. [dB]	Result [dBm] AVG	Result [mW] AVG
149	5745	-4.96	3.25	9.99	8.28	6.73
153	5765	-4.98	3.25	9.99	8.26	6.70
157	5785	-4.95	3.25	10.00	8.30	6.76
161	5805	-4.85	3.25	10.01	8.41	6.93
165	5825	-4.68	3.24	10.01	8.57	7.19

:SAR test channel

IEEE802.11n-20 MCS0

Ch	Frequency [MHz]	P/M Reading AVG	Cable Loss [dB]	Atten. [dB]	Result [dBm] AVG	Result [mW] AVG
149	5745	-5.26	3.25	9.99	7.98	6.28
153	5765	-5.21	3.25	9.99	8.03	6.35
157	5785	-5.16	3.25	10.00	8.09	6.44
161	5805	-5.03	3.25	10.01	8.23	6.65
165	5825	-4.92	3.24	10.01	8.33	6.81

:SAR test channel

Sample Calculation:

Result = Reading + Cable Loss + Attenuator

5.3 SAR testing operating modes

The operating mode for SAR testing was decided by the output power

1) SAR measurement for WLAN

Decision of SAR test channel
The operating mode for SAR testing was decided by the output power

Mode		GHz	Channel	"Default Test Channel"			
				FCC 15.247		UNII	
				802.11b	802.11g		
802.11 b/g/n20		2.412	1	√	Δ		
		2.437	6	√	Δ		
		2.462	11	√	Δ		
802.11a/n20	UNII	5.18	36			√	
		5.20	40				*
		5.22	44				*
		5.24	48			√	
		5.26	52			√	
		5.28	56				*
		5.30	60				*
		5.32	64			√	
		5.50	100				*
		5.52	104			√	
		5.54	108				*
		5.56	112				*
		5.58	116			√	
		5.60	120				*
		5.62	124			√	
		5.64	128				*
		5.66	132				*
		5.68	136			√	
		5.70	140				*
	UNII or FCC 15.247	5.745	149	√		√	
		5.765	153		*		*
		5.785	157	√			*
		5.805	161		*	√	
	FCC 15.247	5.825	165	√			

√ = "default test channels"
* = Possible 802.11a channels with maximum average output > the "default test channels"
Δ = Possible 802.11g channels with maximum average output ¼ dB ≥ the "default test channels"
= when output power is reduced for channel 1 and/or 11 to meet restricted band requirements the highest output channels closest to each of these channels should be tested

Mode	Test Frequency	Modulation	Crest factor	Note
IEEE802.11b	2462MHz(11ch)	DBPSK(1Mbps)	1	*2
IEEE802.11g	Not required			*1
IEEE802.11n20 (2.4G)	2462MHz(11ch)	BPSK(MCS0)	1	*2
IEEE802.11a	5180MHz(36ch) 5240MHz(48ch)	BPSK(6Mbps)	1	
	5280MHz(56ch) 5320MHz(64ch)	BPSK(6Mbps)	1	
	5500MHz(100ch) 5520MHz(104ch) 5560MHz(112ch) 5640MHz(128ch) 5680MHz(136ch) 5700MHz(140ch)	BPSK(6Mbps)	1	
	5745MHz(149ch) 5805MHz(161ch) 5825MHz(165ch)	BPSK(6Mbps)	1	
IEEE802.11n20 (5G)	5180MHz(36ch) 5240MHz(48ch)	BPSK(MCS0)	1	
	5320MHz(64ch)	BPSK(MCS0)	1	*2
	5500MHz(100ch) 5560MHz(112ch) 5640MHz(128ch) 5680MHz(136ch)	BPSK(MCS0)	1	
	5745MHz(149ch) 5805MHz(161ch) 5825MHz(165ch)	BPSK(MCS0)	1	
WLAN				
*Power of the EUT was set by the software as follows; Software / version: Wireless authentication test tool / 1.0.0.0 Power setting: 10dBm *The above setting is the worst case. Any conditions under the normal use do not exceed the condition of setting. In addition, end users cannot change the settings of the output power of the product.				

*1 The 11b mode was maximum average power. According to KDB248227D01, the 11g SAR is not required for other mode because the maximum average output power for other mode is less than 1/4dB higher than that measured 11b mode.

*2 The other channel was not required since maximum average output power channel SAR value is less than 0.8W/kg.

5.4 Confirmation after SAR testing

It was checked that the power drift [W] is within +/-5%.The verification of power drift during the SAR test is that DASY5 system calculates the power drift by measuring the e-filed at the same location at beginning and the end of the scan measurement for each test position.

DASY5 system calculation Power drift value[dB] =20log(Ea)/(Eb)
Before SAR testing : Eb[V/m]
After SAR testing : Ea[V/m]

Limit of power drift[W] =+/-5%
X[dB]=10log[P]=10log(1.05/1)=10log(1.05)-10log(1)=0.212dB

from E-filed relations with power.
p=E^2/η=E^2/
Therefore, The correlation of power and the E-filed
XdB=10log(P)=10log(E)^2=20log(E)

Therefore,
The calculated power drift of DASY5 System must be the less than +/-0.212dB.

SECTION 6 SAR test exclusion considerations

.

6.1 Standalone SAR test exclusion considerations

1) The 1-g and 10-g SAR test exclusion thresholds for 100 MHz to 6 GHz at test separation distances ≤ 50 mm are determined by:
[(max. power of channel, including tune-up tolerance, mW)/(min. test separation distance, mm)] ·[√f(GHz)] ≤ 3.0 for 1-g SAR and ≤ 7.5 for 10-g extremity SAR, where
f(GHz) is the RF channel transmit frequency in GHz
Power and distance are rounded to the nearest mW and mm before calculation
The result is rounded to one decimal place for comparison
The test exclusions are applicable only when the minimum test separation distance is ≤ 50 mm and for transmission frequencies between 100 MHz and 6 GHz. When the minimum test separation distance is < 5 mm, a distance of 5 mm is applied to determine SAR test exclusion.

WLAN 2.4GHz
Main Antenna

Band	Standalone SAR tested	Positiom	Mode	Upper frequency of band *1	Maximum tune-up tolerance limit *5	Min distance *2	Calculation of exclusion *3
WLAN (2.4GHz band)	☑	Bottom	11b DBPSK(1Mbps)	2462 [MHz] (11ch)	11 [dBm] 12.59 [mW] 13 [mW]*6	5 [mm]	4.1
WLAN (2.4GHz band)	☑	Front	11b DBPSK(1Mbps)	2462 [MHz] (11ch)	11 [dBm] 12.59 [mW] 13 [mW]*6	5 [mm]	4.1
WLAN (2.4GHz band)	☑	Rear	11b DBPSK(1Mbps)	2462 [MHz] (11ch)	11 [dBm] 12.59 [mW] 13 [mW]*6	5 [mm]	4.1
WLAN (2.4GHz band)	☐	Left	11b DBPSK(1Mbps)	2462 [MHz] (11ch)	11 [dBm] 12.59 [mW] 13 [mW]*6	43 [mm]	0.5

Sub Antenna

Band	Standalone SAR tested	Positiom	Mode	Upper frequency of band *1	Maximum tune-up tolerance limit *5	Min distance *2	Calculation of exclusion *3
WLAN (2.4GHz band)	☑	Top	11b DBPSK(1Mbps)	2462 [MHz] (11ch)	11 [dBm] 12.59 [mW] 13 [mW]*6	5 [mm]	4.1
WLAN (2.4GHz band)	☑	Front	11b DBPSK(1Mbps)	2462 [MHz] (11ch)	11 [dBm] 12.59 [mW] 13 [mW]*6	5 [mm]	4.1
WLAN (2.4GHz band)	☑	Rear	11b DBPSK(1Mbps)	2462 [MHz] (11ch)	11 [dBm] 12.59 [mW] 13 [mW]*6	5 [mm]	4.1

WLAN 5.2GHz
Main Antenna

Band	Standalone SAR tested	Positiom	Mode	Upper frequency of band *1	Maximum tune-up tolerance limit *5	Min distance *2	Calculation of exclusion *3
WLAN (5GHz band)	☑	Bottom	11a BPSK(6Mbps)	5240 [MHz] (48ch)	11 [dBm] 12.59 [mW] 13 [mW]*6	5 [mm]	6.0
WLAN (5GHz band)	☑	Front	11a BPSK(6Mbps)	5240 [MHz] (48ch)	11 [dBm] 12.59 [mW] 13 [mW]*6	5 [mm]	6.0
WLAN (5GHz band)	☑	Rear	11a BPSK(6Mbps)	5240 [MHz] (48ch)	11 [dBm] 12.59 [mW] 13 [mW]*6	5 [mm]	6.0
WLAN (5GHz band)	☐	Left	11a BPSK(6Mbps)	5240 [MHz] (48ch)	11 [dBm] 12.59 [mW] 13 [mW]*6	43 [mm]	0.7

Sub Antenna

Band	Standalone SAR tested	Positiom	Mode	Upper frequency of band *1	Maximum tune-up tolerance limit *5	Min distance *2	Calculation of exclusion *3
WLAN (5GHz band)	☑	Top	11a BPSK(6Mbps)	5240 [MHz] (48ch)	11 [dBm] 12.59 [mW] 13 [mW]*6	5 [mm]	6.0
WLAN (5GHz band)	☑	Front	11a BPSK(6Mbps)	5240 [MHz] (48ch)	11 [dBm] 12.59 [mW] 13 [mW]*6	5 [mm]	6.0
WLAN (5GHz band)	☑	Rear	11a BPSK(6Mbps)	5240 [MHz] (48ch)	11 [dBm] 12.59 [mW] 13 [mW]*6	5 [mm]	6.0

WLAN 5.3GHz
Main Antenna

Band	Standalone SAR tested	Positiom	Mode	Upper frequency of band *1	Maximum tune-up tolerance limit *5	Min distance *2	Calculation of exclusion *3
WLAN (5GHz band)	☑	Bottom	11a BPSK(6Mbps)	5320 [MHz] (64ch)	11 [dBm] 12.59 [mW] 13 [mW]*6	5 [mm]	6.0
WLAN (5GHz band)	☑	Front	11a BPSK(6Mbps)	5320 [MHz] (64ch)	11 [dBm] 12.59 [mW] 13 [mW]*6	5 [mm]	6.0
WLAN (5GHz band)	☑	Rear	11a BPSK(6Mbps)	5320 [MHz] (64ch)	11 [dBm] 12.59 [mW] 13 [mW]*6	5 [mm]	6.0
WLAN (5GHz band)	☐	Left	11a BPSK(6Mbps)	5320 [MHz] (64ch)	11 [dBm] 12.59 [mW] 13 [mW]*6	43 [mm]	0.7

Sub Antenna

Band	Standalone SAR tested	Positiom	Mode	Upper frequency of band *1	Maximum tune-up tolerance limit *5	Min distance *2	Calculation of exclusion *3
WLAN (5GHz band)	☑	Top	11a BPSK(6Mbps)	5320 [MHz] (64ch)	11 [dBm] 12.59 [mW] 13 [mW]*6	5 [mm]	6.0
WLAN (5GHz band)	☑	Front	11a BPSK(6Mbps)	5320 [MHz] (64ch)	11 [dBm] 12.59 [mW] 13 [mW]*6	5 [mm]	6.0
WLAN (5GHz band)	☑	Rear	11a BPSK(6Mbps)	5320 [MHz] (64ch)	11 [dBm] 12.59 [mW] 13 [mW]*6	5 [mm]	6.0

WLAN 5.6GHz
Main Antenna

Band	Standalone SAR tested	Positiom	Mode	Upper frequency of band *1	Maximum tune-up tolerance limit *5	Min distance *2	Calculation of exclusion *3
WLAN (5GHz band)	☑	Bottom	11a BPSK(6Mbps)	5700 [MHz] (140ch)	10 [dBm] 10.00 [mW] 10 [mW]*6	5 [mm]	4.8
WLAN (5GHz band)	☑	Front	11a BPSK(6Mbps)	5700 [MHz] (140ch)	10 [dBm] 10.00 [mW] 10 [mW]*6	5 [mm]	4.8
WLAN (5GHz band)	☑	Rear	11a BPSK(6Mbps)	5700 [MHz] (140ch)	10 [dBm] 10.00 [mW] 10 [mW]*6	5 [mm]	4.8
WLAN (5GHz band)	☐	Left	11a BPSK(6Mbps)	5700 [MHz] (140ch)	10 [dBm] 10.00 [mW] 10 [mW]*6	43 [mm]	0.6

Sub Antenna

Band	Standalone SAR tested	Positiom	Mode	Upper frequency of band *1	Maximum tune-up tolerance limit *5	Min distance *2	Calculation of exclusion *3
WLAN (5GHz band)	☑	Top	11a BPSK(6Mbps)	5700 [MHz] (140ch)	10 [dBm] 10.00 [mW] 10 [mW]*6	5 [mm]	4.8
WLAN (5GHz band)	☑	Front	11a BPSK(6Mbps)	5700 [MHz] (140ch)	10 [dBm] 10.00 [mW] 10 [mW]*6	5 [mm]	4.8
WLAN (5GHz band)	☑	Rear	11a BPSK(6Mbps)	5700 [MHz] (140ch)	10 [dBm] 10.00 [mW] 10 [mW]*6	5 [mm]	4.8

WLAN 5.8GHz
Main Antenna

Band	Standalone SAR tested	Positiom	Mode	Upper frequency of band *1	Maximum tune-up tolerance limit *5	Min distance *2	Calculation of exclusion *3
WLAN (5GHz band)	☑	Bottom	11a BPSK(6Mbps)	5825 [MHz] (165ch)	10 [dBm] 10.00 [mW] 10 [mW]*6	5 [mm]	4.8
WLAN (5GHz band)	☑	Front	11a BPSK(6Mbps)	5825 [MHz] (165ch)	10 [dBm] 10.00 [mW] 10 [mW]*6	5 [mm]	4.8
WLAN (5GHz band)	☑	Rear	11a BPSK(6Mbps)	5825 [MHz] (165ch)	10 [dBm] 10.00 [mW] 10 [mW]*6	5 [mm]	4.8
WLAN (5GHz band)	☐	left	11a BPSK(6Mbps)	5825 [MHz] (165ch)	10 [dBm] 10.00 [mW] 10 [mW]*6	43 [mm]	0.6

Sub Antenna

Band	Standalone SAR tested	Positiom	Mode	Upper frequency of band *1	Maximum tune-up tolerance limit *5	Min distance *2	Calculation of exclusion *3
WLAN (5GHz band)	☑	Top	11a BPSK(6Mbps)	5825 [MHz] (165ch)	10 [dBm] 10.00 [mW] 10 [mW]*6	5 [mm]	4.8
WLAN (5GHz band)	☑	Front	11a BPSK(6Mbps)	5825 [MHz] (165ch)	10 [dBm] 10.00 [mW] 10 [mW]*6	5 [mm]	4.8
WLAN (5GHz band)	☑	Rear	11a BPSK(6Mbps)	5825 [MHz] (165ch)	10 [dBm] 10.00 [mW] 10 [mW]*6	5 [mm]	4.8

2) At 100 MHz to 6 GHz and for *test separation distances* > 50 mm, the SAR test exclusion threshold is determined according to the following.
a) [Threshold at 50 mm in step 1) + (test separation distance - 50 mm)·(f(MHz)/150)] mW, at 100 MHz to 1500 MHz
b) [Threshold at 50 mm in step 1) + (test separation distance - 50 mm)·10] mW at > 1500 MHz and ≤ 6 GHz

WLAN 2.4GHz
Main Antenna

Band	Standalone SAR tested	Positiom	Mode	Upper frequency of band *1	Maximum tune-up tolerance limit *5	Min distance *2	Calculation of threshold*4
WLAN (2.4GHz band)	☐	Top	11b DBPSK(1Mbps)	2462 [MHz] (11ch)	11 [dBm] 12.59 [mW] 13 [mW]*6	380 [mm]	3396 [mW]
WLAN (2.4GHz band)	☐	Right	11b DBPSK(1Mbps)	2462 [MHz] (11ch)	11 [dBm] 12.59 [mW] 13 [mW]*6	381 [mm]	3406 [mW]

Sub Antenna

Band	Standalone SAR tested	Positiom	Mode	Upper frequency of band *1	Maximum tune-up tolerance limit *5	Min distance *2	Calculation of threshold*4
WLAN (2.4GHz band)	☐	Bottom	11b DBPSK(1Mbps)	2462 [MHz] (11ch)	11 [dBm] 12.59 [mW] 13 [mW]*6	379 [mm]	3386 [mW]
WLAN (2.4GHz band)	☐	Left	11b DBPSK(1Mbps)	2462 [MHz] (11ch)	11 [dBm] 12.59 [mW] 13 [mW]*6	206 [mm]	1656 [mW]
WLAN (2.4GHz band)	☐	Right	11b DBPSK(1Mbps)	2462 [MHz] (11ch)	11 [dBm] 12.59 [mW] 13 [mW]*6	218 [mm]	1776 [mW]

WLAN 5.2GHz
Main Antenna

Band	Standalone SAR tested	Positiom	Mode	Upper frequency of band *1	Maximum tune-up tolerance limit *5	Min distance *2	Calculation of threshold*4
WLAN (5GHz band)	☐	Top	11a BPSK(6Mbps)	5240 [MHz] (48ch)	11 [dBm] 12.59 [mW] 13 [mW]*6	380 [mm]	3366 [mW]
WLAN (5GHz band)	☐	Right	11a BPSK(6Mbps)	5240 [MHz] (48ch)	11 [dBm] 12.59 [mW] 13 [mW]*6	381 [mm]	3376 [mW]

Sub Antenna

Band	Standalone SAR tested	Positiom	Mode	Upper frequency of band *1	Maximum tune-up tolerance limit *5	Min distance *2	Calculation of threshold*4
WLAN (5GHz band)	☐	Bottom	11a BPSK(6Mbps)	5240 [MHz] (48ch)	11 [dBm] 12.59 [mW] 13 [mW]*6	379 [mm]	3356 [mW]
WLAN (5GHz band)	☐	Left	11a BPSK(6Mbps)	5240 [MHz] (48ch)	11 [dBm] 12.59 [mW] 13 [mW]*6	206 [mm]	1626 [mW]
WLAN (5GHz band)	☐	Right	11a BPSK(6Mbps)	5240 [MHz] (48ch)	11 [dBm] 12.59 [mW] 13 [mW]*6	218 [mm]	1746 [mW]

WLAN 5.3GHz
Main Antenna

Band	Standalone SAR tested	Positiom	Mode	Upper frequency of band *1	Maximum tune-up tolerance limit *5	Min distance *2	Calculation of threshold*4
WLAN (5GHz band)	☐	Top	11a BPSK(6Mbps)	5320 [MHz] (64ch)	11 [dBm] 12.59 [mW] 13 [mW]*6	380 [mm]	3365 [mW]
WLAN (5GHz band)	☐	Right	11a BPSK(6Mbps)	5320 [MHz] (64ch)	11 [dBm] 12.59 [mW] 13 [mW]*6	381 [mm]	3375 [mW]

Sub Antenna

Band	Standalone SAR tested	Positiom	Mode	Upper frequency of band *1	Maximum tune-up tolerance limit *5	Min distance *2	Calculation of threshold*4
WLAN (5GHz band)	☐	Bottom	11a BPSK(6Mbps)	5320 [MHz] (64ch)	11 [dBm] 12.59 [mW] 13 [mW]*6	379 [mm]	3355 [mW]
WLAN (5GHz band)	☐	Left	11a BPSK(6Mbps)	5320 [MHz] (64ch)	11 [dBm] 12.59 [mW] 13 [mW]*6	206 [mm]	1625 [mW]
WLAN (5GHz band)	☐	Righ	11a BPSK(6Mbps)	5320 [MHz] (64ch)	11 [dBm] 12.59 [mW] 13 [mW]*6	218 [mm]	1745 [mW]

WLAN 5.6GHz
Main Antenna

Band	Standalone SAR tested	Positiom	Mode	Upper frequency of band *1	Maximum tune-up tolerance limit *5	Min distance *2	Calculation of threshold*4
WLAN(5GHz band)	☐	Top	11a BPSK(6Mbps)	5700 [MHz] (140ch)	10 [dBm] 10.00 [mW] 10 [mW]*6	380 [mm]	3363 [mW]
WLAN(5GHz band)	☐	Right	11a BPSK(6Mbps)	5700 [MHz] (140ch)	10 [dBm] 10.00 [mW] 10 [mW]*6	381 [mm]	3373 [mW]

Sub Antenna

Band	Standalone SAR tested	Positiom	Mode	Upper frequency of band *1	Maximum tune-up tolerance limit *5	Min distance *2	Calculation of threshold*4
WLAN(5GHz band)	☐	Bottom	11a BPSK(6Mbps)	5700 [MHz] (140ch)	10 [dBm] 10.00 [mW] 10 [mW]*6	379 [mm]	3353 [mW]
WLAN(5GHz band)	☐	Left	11a BPSK(6Mbps)	5700 [MHz] (140ch)	10 [dBm] 10.00 [mW] 10 [mW]*6	206 [mm]	1623 [mW]
WLAN(5GHz band)	☐	Right	11a BPSK(6Mbps)	5700 [MHz] (140ch)	10 [dBm] 10.00 [mW] 10 [mW]*6	218 [mm]	1743 [mW]

WLAN 5.8GHz
Main Antenna

Band	Standalone SAR tested	Positiom	Mode	Upper frequency of band *1	Maximum tune-up tolerance limit *5	Min distance *2	Calculation of threshold*4
WLAN (5GHz band)	☐	Top	11a BPSK(6Mbps)	5825 [MHz] (165ch)	10 [dBm] 10.00 [mW] 10 [mW]*6	380 [mm]	3362 [mW]
WLAN (5GHz band)	☐	Right	11a BPSK(6Mbps)	5825 [MHz] (165ch)	10 [dBm] 10.00 [mW] 10 [mW]*6	381 [mm]	3372 [mW]

Sub Antenna

Band	Standalone SAR tested	Positiom	Mode	Upper frequency of band *1	Maximum tune-up tolerance limit *5	Min distance *2	Calculation of threshold*4
WLAN (5GHz band)	☐	Top	11a BPSK(6Mbps)	5825 [MHz] (165ch)	10 [dBm] 10.00 [mW] 10 [mW]*6	379 [mm]	3352 [mW]
WLAN (5GHz band)	☐	Right	11a BPSK(6Mbps)	5825 [MHz] (165ch)	10 [dBm] 10.00 [mW] 10 [mW]*6	206 [mm]	1622 [mW]
WLAN (5GHz band)	☐	Right	11a BPSK(6Mbps)	5825 [MHz] (165ch)	10 [dBm] 10.00 [mW] 10 [mW]*6	218 [mm]	1742 [mW]

*1 The upper frequency of the frequency band was used in order to calculate standalone SAR test exclusion considerations.
*2 When the minimum test separation distance is < 5 mm, a distance of 5 mm is applied to determine SAR test exclusion.
Refer to Appendix 4.
*3 [(max. power of channel, including tune-up tolerance, mW)/(min. test separation distance, mm)] ·[$\sqrt{f(GHz)}$] ≤ 3.0
If it is Calculation of exclusion ≤ 3.0 standalone SAR test is excluded.
*4 [(3·50)/($\sqrt{f_{(GHz)}}$)) + (test separation distance - 50 mm)·(f(MHz)/150)] mW at > 100 MHz and ≤ 1500 MHz
[(3·50)/($\sqrt{f_{(GHz)}}$)) + (test separation distance - 50 mm)·10] mW at > 1500 MHz and ≤ 6 GHz
If it is maximum tune-up tolerance limit < Threshold, standalone SAR test is excluded.
*5 Maximum tune-up tolerance limit is by the specification from a customer.
*6 Maximum tune-up tolerance limit(mW) is rounded to one decimal place.

SECTION 7: Description of the Body setup

7.1 Test position for Body setup

i) Procedure for SAR testing

-The tested procedure was performed according to the KDB447498 D01 (Mobile and Portable Device RF Exposure Procedures and Equipment Authorization Policies)

ii) Test mode

WLAN 2.4G	**Data transmission mode (11b/n-20)**
WLAN 5G	**Data transmission mode (11a/n-20)**

iii) Test position

No.	Position	Test distance	WLAN		
			Tested	Antenna	Separation from user
1	Bottom	0mm	☑	Main	2.0mm
2	Front	0mm	☑	Main	3.5mm
3	Rear	0mm	☑	Main	3.5mm

No.	Position	Test distance	WLAN		
			Tested	Antenna	Separation from user
1	Top	0mm	☑	Sub	3.4mm
2	Front	0mm	☑	Sub	3.5mm
3	Rear	0mm	☑	Sub	3.5mm

SECTION 8 : Test surrounding

8.1 Measurement uncertainty

This measurement uncertainty budget is suggested by IEEE Std 1528(2013)[3] and determined by Schmid & Partner Engineering AG (DASY5 Uncertainty Budget[2]). Per KDB 865664 D01 SAR Measurement 100 MHz to 6 GHz v01r01 Section 2.8.1., when the highest measured SAR(1g) within a frequency band is < 1.5W/kg, the extensive SAR measurement uncertainty analysis described in IEEE Std.1528 (2013) is not required in SAR reports submitted for equipment approval.
<0.3 – 3GHz range Body>

Error Description	Uncertai value ±	Probability distribution	divisor	(ci) 1g	Standard (1g)	vi or veff
Measurement System						
Probe calibration	± 6.00	Normal	1	1	± 6.00	∞
Axial isotropy of the probe	± 4.7	Rectangular	√3	0.7	± 1.9	∞
Spherical isotropy of the probe	± 9.6	Rectangular	√3	0.7	± 3.9	∞
Boundary effects	± 1.0	Rectangular	√3	1	± 0.6	∞
Probe linearity	± 4.7	Rectangular	√3	1	± 2.7	∞
Detection limit	± 1.0	Rectangular	√3	1	± 0.6	∞
Modulation response	± 2.4	Rectangular	√3	1	± 1.4	∞
Readout electronics	± 0.3	Normal	1	1	± 0.3	∞
Response time	± 0.8	Rectangular	√3	1	± 0.5	∞
Integration time	± 2.6	Rectangular	√3	1	± 1.5	∞
RF ambient Noise	± 3.0	Rectangular	√3	1	± 1.7	∞
RF ambient Reflections	± 3.0	Rectangular	√3	1	± 1.7	∞
Probe Positioner	± 0.4	Rectangular	√3	1	± 0.2	∞
Probe positioning	± 2.9	Rectangular	√3	1	± 1.7	∞
Max.SAR Eval.	± 2.0	Rectangular	√3	1	± 1.2	∞
Test Sample Related						
Device positioning	± 2.9	Normal	1	1	± 2.9	7
Device holder uncertainty	± 3.6	Normal	1	1	± 3.6	5
Power drift	± 5.0	Rectangular	√3	1	± 2.9	∞
Power Scaling	+ 0.0	Rectangular	√3	1	± 0.0	∞
Phantom and Setup						
Phantom uncertainty	± 6.1	Rectangular	√3	1	± 3.5	∞
Algorithm for correcting SAR for deviations in permittivity and conductivity	± 1.9	Normal	1	1	± 1.9	∞
Liquid conductivity (meas.)	+ 4.0	Rectangular	1	0.78	+ 3.1	∞
Liquid permittivity (meas.)	- 3.9	Rectangular	1	0.23	- 0.9	∞
Liquid conductivity - temp.unc (below 2deg.C.)	± 5.2	Rectangular	√3	0.78	± 2.3	∞
Liquid permittivity - temp.unc (below 2deg.C.)	± 0.8	Rectangular	√3	0.23	± 0.1	∞
Combined Standard Uncertainty					± **11.719**	
Expanded Uncertainty (k=2)					± **23.4**	

*. Table of uncertainties are listed for ISO/IEC 17025.

<3 – 6GHz range Body>

Error Description	Uncertai value ±	Probability distribution	divisor	(ci) 1g	Standard (1g)	vi or veff
Measurement System						
Probe calibration	± 6.55	Normal	1	1	± 6.55	∞
Axial isotropy of the probe	± 4.7	Rectangular	√3	0.7	± 1.9	∞
Spherical isotropy of the probe	± 9.6	Rectangular	√3	0.7	± 3.9	∞
Boundary effects	± 2.0	Rectangular	√3	1	± 1.2	∞
Probe linearity	± 4.7	Rectangular	√3	1	± 2.7	∞
Detection limit	± 1.0	Rectangular	√3	1	± 0.6	∞
Modulation response	± 2.4	Rectangular	√3	1	± 1.4	∞
Readout electronics	± 0.3	Normal	1	1	± 0.3	∞
Response time	± 0.8	Rectangular	√3	1	± 0.5	∞
Integration time	± 2.6	Rectangular	√3	1	± 1.5	∞
RF ambient Noise	± 3.0	Rectangular	√3	1	± 1.7	∞
RF ambient Reflections	± 3.0	Rectangular	√3	1	± 1.7	∞
Probe Positioner	± 0.8	Rectangular	√3	1	± 0.5	∞
Probe positioning	± 6.7	Rectangular	√3	1	± 3.9	∞
Max.SAR Eval.	± 4.0	Rectangular	√3	1	± 2.3	∞
Test Sample Related						
Device positioning	± 2.9	Normal	1	1	± 2.9	52
Device holder uncertainty	± 3.6	Normal	1	1	± 3.6	5
Power drift	± 5.0	Rectangular	√3	1	± 2.9	∞
Power Scaling	+ 0.0	Rectangular	√3	1	± 0.0	∞
Phantom and Setup						
Phantom uncertainty	± 6.6	Rectangular	√3	1	± 3.8	∞
Algorithm for correcting SAR for deviations in permittivity and conductivity	± 1.9	Normal	1	1	± 1.9	∞
Liquid conductivity (meas.)	- 4.4	Rectangular	1	0.78	+ 3.4	∞
Liquid permittivity (meas.)	– 4.0	Rectangular	1	0.23	- 0.9	∞
Liquid conductivity - temp.unc (below 2deg.C.)	± 2.4	Rectangular	√3	0.78	± 1.1	∞
Liquid permittivity - temp.unc (below 2deg.C.)	± 0.8	Rectangular	√3	0.23	± 0.1	∞
Combined Standard Uncertainty					± **12.708**	
Expanded Uncertainty (k=2)					± **25.4**	

*. Table of uncertainties are listed for ISO/IEC 17025.

SECTION 9 : Measurement results

9.1 WLAN Body SAR (2.4G)

(1)Method of measurement

Step.1 The searching for the worst position.
The test was performed at the worst transmit rate and channel.
Step2. The changing to 11n-20 mode
The test was performed at the worst position of Step.1

Note:
1)The other channel was not required since maximum average output power channel SAR value is less than 0.8W/kg.
2) Repeated measurement is not required when the original highest measured SAR is < 0.80 W/kg.
When the original highest measured SAR is ≥ 0.80 W/kg, repeat that measurement once.
Perform a second repeated measurement only if the ratio of largest to smallest SAR for the original and first repeated measurements is > 1.20 or when the original or repeated measurement is ≥ 1.45 W/kg (~ 10% from the 1-g SAR limit).

(2)Simulated Tissue Liquid Parameter confirmation

The dielectric parameters were checked prior to assessment using the HP85070D dielectric probe kit.
The dielectric parameters measurement is reported in each correspondent section.

DIELECTRIC PARAMETERS MEASUREMENT RESULTS											
Date	Ambient Temp. [deg.c]	Relative Humidity [%]	Liquid type	Liquid Temp. [deg.c]	Measured Frequency [MHz]	Parameters	Target Value	Measured	Deviation [%]	Limit [%]	Remark
1-Aug	24	42	MSL 2450	23.5	2450	εr	52.7	50.7	-3.8	+/-5	*1
						σ [mho/m]	1.95	2.02	3.6	+/-5	
1-Aug	24	42	MSL 2450	23.5	2462	εr	52.7	50.6	-3.9	+/-5	*2
						σ [mho/m]	1.97	2.05	4.0	+/-5	
-	-	-	-	-	3000	εr	52.0	-	-	-	*1
						σ [mho/m]	2.73	-	-	-	

εr: Relative Permittivity / σ : Coductivity
*1 The Target value is a parameter defined in KDB 865664D01.
*2 The dielectric parameters should be linearly interpolated between the closest pair of target frequencies to determine the applicable dielectric parameters corresponding to the device test frequency.

(3)SAR correction for deviations of complex permittivity from target

$\Delta SAR = c\varepsilon\ \Delta\varepsilon r + c\sigma\ \Delta\sigma$

<1g>

$C\varepsilon = -7.854\times10^{-4}f^3 + 9.402\times10^{-3}f^2 - 2.742\times10^{-2}f - 0.2026$

$C\sigma = 9.804\times10^{-3}f^3 - 8.661\times10^{-2}f^2 + 2.981\times10^{-2}f + 0.7829$

<10g>

$C\varepsilon = 3.456\times10^{-3}f^3 - 3.531\times10^{-2}f^2 + 7.675\times10^{-2}f - 0.1860$

$C\sigma = 4.479\times10^{-3}f^3 - 1.586\times10^{-2}f^2 - 0.1972f + 0.7717$

'f ' is the frequency in GHz.

The measured SAR results are not corrected because ⊿SAR has a positive sign.
When ⊿SAR is positive sign, SAR value will become small if corrected calculation of SAR is performed.
Therefore, corrected calculation is not performed.

Date		1-Aug
	f(GHz)=	2.462
	⊿εr(%)=	-3.90
	⊿σ(%)=	4.00
1g	Cε=	-0.2248
	Cσ=	0.4776
	⊿SAR(%)=	2.79
10g	Cε=	-0.1595
	Cσ=	0.2569
	⊿SAR(%)=	1.65

(4)Result of Body SAR

2.4GHz Band

Main Antenna

BODY SAR MEASUREMENT RESULTS													
Frequency		Modulation	Measured power		Maximum tune-up tolerance limit		Phantom Section	EUT Set-up Conditions			Measured SAR(1g) [W/kg]	Measured SAR(1g) ⊿SAR correct [W/kg] *1	Reported SAR(1g) *2 [W/kg]
Channel	[MHz]		[dBm]	[mW]	[dBm]	[mW]		Antenna	Position	Separation [mm]			
Step.1 Position searching													
11	2462	11b 1Mbps	10.00	10.00	11.00	12.59	Flat	Main	Front	0	**0.179**	**N/A**	**0.225**
11	2462	11b 1Mbps	10.00	10.00	11.00	12.59	Flat	Main	Rear	0	**0.056**	**N/A**	**0.070**
11	2462	11b 1Mbps	10.00	10.00	11.00	12.59	Flat	Main	Bottom	0	**0.196**	**N/A**	**0.247**
Step.2 Mode change at the worst position													
11	2462	11n20 MCS0	9.67	9.27	11.00	12.59	Flat	Main	Bottom	0	**0.206**	**N/A**	**0.280**

*1 Refer to clause 9.2 (3).

*2 Reported SAR= Maximum tune-up tolerance limit [mW] / Measured power [mW] · Measured SAR(⊿SAR correct) [W/kg]

Sub Antenna

BODY SAR MEASUREMENT RESULTS													
Frequency		Modulation	Measured power		Maximum tune-up tolerance limit		Phantom Section	EUT Set-up Conditions			Measured SAR(1g) [W/kg]	Measured SAR(1g) ⊿SAR correct [W/kg] *1	Reported SAR(1g) *2 [W/kg]
Channel	[MHz]		[dBm]	[mW]	[dBm]	[mW]		Antenna	Position	Separation [mm]			
Step.1 Position searching													
11	2462	11b 1Mbps	10.02	10.05	11.00	12.59	Flat	Sub	Front	0	**0.129**	**N/A**	**0.162**
11	2462	11b 1Mbps	10.02	10.05	11.00	12.59	Flat	Sub	Rear	0	**0.082**	**N/A**	**0.103**
11	2462	11b 1Mbps	10.02	10.05	11.00	12.59	Flat	Sub	Top	0	**0.268**	**N/A**	**0.336**
Step.2 Mode change at the worst position													
11	2462	11n20 MCS0	9.70	9.33	11.00	12.59	Flat	Sub	Top	0	**0.277**	**N/A**	**0.374**

*1 Refer to clause 9.2 (3).

*2 Reported SAR= Maximum tune-up tolerance limit [mW] / Measured power [mW] · Measured SAR(⊿SAR correct) [W/kg]

9.2 WLAN Body SAR (5G)

(1)Method of measurement

Step.1 The searching for the worst position.
The test was performed at the worst transmit rate and channel of 11a mode.
Step2. The changing to 11n-20 mode
The test was performed at the worst position of Step.1
Step.3 The changing to the other channels
The test was performed at the worst condition of Step1 to 2
Step.4 Repeat Measurement
The test was performed at the worst condition with measured SAR level in Step1 to 3 > 0.8W/kg

Note:
1)
a) In case of 5180-5240MHz, 5260-5320MHz and 5745-5825MHz frequency range.
The other channel was not required since maximum average output power channel SAR value is less than 0.8W/kg.
b) In case of 5500-5700MHz frequency range.
The other channel was not required since maximum average output power channel SAR value is less than 0.4W/kg

2) Repeated measurement is not required when the original highest measured SAR is < 0.80 W/kg.
When the original highest measured SAR is ≥ 0.80 W/kg, repeat that measurement once.
Perform a second repeated measurement only if the ratio of largest to smallest SAR for the original and first repeated measurements is > 1.20 or when the original or repeated measurement is ≥ 1.45 W/kg (~ 10% from the 1-g SAR limit).

(2)Simulated Tissue Liquid Parameter confirmation

The dielectric parameters were checked prior to assessment using the HP85070D dielectric probe kit.
The dielectric parameters measurement is reported in each correspondent section.

DIELECTRIC PARAMETERS MEASUREMENT RESULTS											
Date	Ambient Temp. [deg.c]	Relative Humidity [%]	Liquid type	Liquid Temp. [deg.c]	Measured Frequency [MHz]	Parameters	Target Value	Measured	Deviation [%]	Limit [%]	Remark
-	-	-	-	-	3000	εr	52.0	-	-	-	*1
						σ [mho/m]	2.73	-	-	-	
24-Jul	24	50	MBBL 3.5-5.8	23.5	5180	εr	49.0	48.3	-1.5	+/-5	*2
						σ [mho/m]	5.28	5.12	-3.0	+/-5	
24-Jul	24	50	MBBL 3.5-5.8	23.5	5200	εr	49.0	48.0	-2.0	+/-5	*2
						σ [mho/m]	5.30	5.19	-2.0	+/-5	
24-Jul	24	50	MBBL 3.5-5.8	23.5	5240	εr	49.0	48.2	-1.5	+/-5	*2
						σ [mho/m]	5.35	5.36	0.2	+/-5	
25-Jul	24	50	MBBL 3.5-5.8	23.5	5280	εr	48.9	47.7	-2.5	+/-5	*2
						σ [mho/m]	5.40	5.23	-3.1	+/-5	
25-Jul	24	50	MBBL 3.5-5.8	23.5	5300	εr	48.9	48.0	-1.8	+/-5	*2
						σ [mho/m]	5.42	5.46	0.8	+/-5	
25-Jul	24	50	MBBL 3.5-5.8	23.5	5320	εr	48.9	46.9	-4.0	+/-5	*2
						σ [mho/m]	5.44	5.28	-3.0	+/-5	
25-Jul	24	50	MBBL 3.5-5.8	23.5	5500	εr	48.6	47.6	-2.1	+/-5	*2
						σ [mho/m]	5.65	5.46	-3.4	+/-5	
27-Jul	24	61	MBBL 3.5-5.8	23.5	5500	εr	48.6	47.7	-1.9	+/-5	*2
						σ [mho/m]	5.65	5.61	-0.8	+/-5	
28-Jul	24	57	MBBL 3.5-5.8	23.5	5500	εr	48.6	47.7	-1.9	+/-5	*2
						σ [mho/m]	5.65	5.56	-1.6	+/-5	
25-Jul	24	50	MBBL 3.5-5.8	23.5	5520	εr	48.6	47.8	-1.7	+/-5	*2
						σ [mho/m]	5.67	5.55	-2.2	+/-5	
27-Jul	24	61	MBBL 3.5-5.8	23.5	5560	εr	48.5	47.5	-2.2	+/-5	*2
						σ [mho/m]	5.72	5.74	0.3	+/-5	
28-Jul	24	57	MBBL 3.5-5.8	23.5	5560	εr	48.5	47.8	-1.5	+/-5	*2
						σ [mho/m]	5.72	5.64	-1.5	+/-5	
25-Jul	24	50	MBBL 3.5-5.8	23.5	5600	εr	48.5	47.3	-2.5	+/-5	*2
						σ [mho/m]	5.77	5.67	-1.7	+/-5	
27-Jul	24	61	MBBL 3.5-5.8	23.5	5600	εr	48.5	47.5	-2.1	+/-5	*2
						σ [mho/m]	5.77	5.87	1.7	+/-5	
28-Jul	24	57	MBBL 3.5-5.8	23.5	5600	εr	48.5	47.4	-2.2	+/-5	*2
						σ [mho/m]	5.77	5.73	-0.7	+/-5	

27-Jul	24	61	MBBL 3.5-5.8	23.5	5640	εr	48.4	46.9	-3.3	+/-5	*2
						σ [mho/m]	5.82	5.86	0.7	+/-5	
28-Jul	24	61	MBBL 3.5-5.8	23.5	5640	εr	48.4	47.0	-2.9	+/-5	*2
						σ [mho/m]	5.82	5.84	0.4	+/-5	
27-Jul	24	61	MBBL 3.5-5.8	23.5	5680	εr	48.4	47.3	-2.3	+/-5	*2
						σ [mho/m]	5.86	6.02	2.6	+/-5	
28-Jul	24	57	MBBL 3.5-5.8	23.5	5680	εr	48.4	47.3	-2.2	+/-5	*2
						σ [mho/m]	5.86	5.85	-0.2	+/-5	
28-Jul	24	57	MBBL 3.5-5.8	23.5	5700	εr	48.4	47.4	-2.0	+/-5	*2
						σ [mho/m]	5.89	5.82	-1.0	+/-5	
30-Jul	24	60	MBBL 3.5-5.8	23.5	5745	εr	48.3	46.8	-3.1	+/-5	*2
						σ [mho/m]	5.94	6.09	2.5	+/-5	
31-Jul	24	59	MBBL 3.5-5.8	23.5	5745	εr	48.3	47.2	-2.2	+/-5	*2
						σ [mho/m]	5.94	6.00	1.0	+/-5	
30-Jul	24	60	MBBL 3.5-5.8	23.5	5800	εr	48.2	47.1	-2.3	+/-5	*1
						σ [mho/m]	6.00	5.99	-0.2	+/-5	
31-Jul	24	59	MBBL 3.5-5.8	23.5	5800	εr	48.2	46.9	-2.7	+/-5	*1
						σ [mho/m]	6.00	5.90	-1.7	+/-5	
30-Jul	24	60	MBBL 3.5-5.8	23.5	5805	εr	48.2	47.1	-2.3	+/-5	*2
						σ [mho/m]	6.01	6.07	1.0	+/-5	
31-Jul	24	59	MBBL 3.5-5.8	23.5	5805	εr	48.2	46.7	-3.1	+/-5	*2
						σ [mho/m]	6.01	5.74	-4.4	+/-5	
30-Jul	24	60	MBBL 3.5-5.8	23.5	5825	εr	48.2	46.6	-3.3	+/-5	*2
						σ [mho/m]	6.03	5.82	-3.4	+/-5	
31-Jul	24	59	MBBL 3.5-5.8	23.5	5825	εr	48.2	47.5	-1.3	+/-5	*2
						σ [mho/m]	6.03	5.96	-1.1	+/-5	

εr: Relative Permittivity / σ : Coductivity
*1 The Target value is a parameter defined in KDB 865664D01.
*2 The dielectric parameters should be linearly interpolated between the closest pair of target frequencies to determine the applicable dielectric parameters corresponding to the device test frequency.

(3)SAR correction for deviations of complex permittivity from target

$\Delta SAR = c\varepsilon\ \Delta\varepsilon r + c\sigma\ \Delta\sigma$

<1g>

$C\varepsilon = -7.854\times10^{-4}f^3 + 9.402\times10^{-3}f^2 - 2.742\times10^{-2}f - 0.2026$

$C\sigma = 9.804\times10^{-3}f^3 - 8.661\times10^{-2}f^2 + 2.981\times10^{-2}f + 0.7829$

<10g>

$C\varepsilon = 3.456\times10^{-3}f^3 - 3.531\times10^{-2}f^2 + 7.675\times10^{-2}f - 0.1860$

$C\sigma = 4.479\times10^{-3}f^3 - 1.586\times10^{-2}f^2 - 0.1972f + 0.7717$

'f ' is the frequency in GHz.

The measured SAR results are not corrected because ⊿SAR has a positive sign.
When ⊿SAR is positive sign, SAR value will become small if corrected calculation of SAR is performed.
Therefore, corrected calculation is not performed.

Date		24-Jul
	f(GHz)=	5.18
	⊿εr(%)=	-1.50
	⊿σ(%)=	-3.00
1g	Cε=	-0.2015
	Cσ=	-0.0240
	⊿SAR(%)=	0.37
10g	Cε=	-0.2555
	Cσ=	-0.0528
	⊿SAR(%)=	0.54

Date		24-Jul
	f(GHz)=	5.24
	⊿εr(%)=	-1.50
	⊿σ(%)=	0.20
1g	Cε=	-0.2011
	Cσ=	-0.0284
	⊿SAR(%)=	0.30
10g	Cε=	-0.2561
	Cσ=	-0.0527
	⊿SAR(%)=	0.37

Date		25-Jul
	f(GHz)=	5.28
	⊿εr(%)=	-2.50
	⊿σ(%)=	-3.10
1g	Cε=	-0.2009
	Cσ=	-0.0311
	⊿SAR(%)=	0.60
10g	Cε=	-0.2564
	Cσ=	-0.0524
	⊿SAR(%)=	0.80

Date		25-Jul
	f(GHz)=	5.32
	⊿εr(%)=	-4.00
	⊿σ(%)=	-3.00
1g	Cε=	-0.2006
	Cσ=	-0.0336
	⊿SAR(%)=	0.90
10g	Cε=	-0.2567
	Cσ=	-0.0519
	⊿SAR(%)=	1.18

Date		25-Jul
	f(GHz)=	5.5
	⊿εr(%)=	-2.10
	⊿σ(%)=	-3.40
1g	Cε=	-0.1997
	Cσ=	-0.0420
	⊿SAR(%)=	0.56
10g	Cε=	-0.2570
	Cσ=	-0.0475
	⊿SAR(%)=	0.70

Date		27-Jul
	f(GHz)=	5.5
	⊿εr(%)=	-1.90
	⊿σ(%)=	-0.80
1g	Cε=	-0.1997
	Cσ=	-0.0420
	⊿SAR(%)=	0.41
10g	Cε=	-0.2570
	Cσ=	-0.0475
	⊿SAR(%)=	0.53

Date		28-Jul
	f(GHz)=	5.5
	⊿εr(%)=	-1.90
	⊿σ(%)=	-1.60
1g	Cε=	-0.1997
	Cσ=	-0.0420
	⊿SAR(%)=	0.45
10g	Cε=	-0.2570
	Cσ=	-0.0475
	⊿SAR(%)=	0.56

Date		25-Jul
	f(GHz)=	5.52
	⊿εr(%)=	-1.70
	⊿σ(%)=	-2.20
1g	Cε=	-0.1996
	Cσ=	-0.0426
	⊿SAR(%)=	0.43
10g	Cε=	-0.2570
	Cσ=	-0.0468
	⊿SAR(%)=	0.54

Date		27-Jul
	f(GHz)=	5.56
	⊿εr(%)=	-2.20
	⊿σ(%)=	0.30
1g	Cε=	-0.1994
	Cσ=	-0.0437
	⊿SAR(%)=	0.43
10g	Cε=	-0.2568
	Cσ=	-0.0452
	⊿SAR(%)=	0.55

Date		28-Jul
	f(GHz)=	5.56
	⊿εr(%)=	-1.50
	⊿σ(%)=	-1.50
1g	Cε=	-0.1994
	Cσ=	-0.0437
	⊿SAR(%)=	0.36
10g	Cε=	-0.2568
	Cσ=	-0.0452
	⊿SAR(%)=	0.45

Date		27-Jul
	f(GHz)=	5.64
	⊿εr(%)=	-3.30
	⊿σ(%)=	0.70
1g	Cε=	-0.1991
	Cσ=	-0.0451
	⊿SAR(%)=	0.63
10g	Cε=	-0.2563
	Cσ=	-0.0414
	⊿SAR(%)=	0.82

Date		28-Jul
	f(GHz)=	5.64
	⊿εr(%)=	-2.90
	⊿σ(%)=	0.40
1g	Cε=	-0.1991
	Cσ=	-0.0451
	⊿SAR(%)=	0.56
10g	Cε=	-0.2563
	Cσ=	-0.0414
	⊿SAR(%)=	0.73

Date		27-Jul
	f(GHz)=	5.68
	⊿εr(%)=	-2.30
	⊿σ(%)=	2.60
1g	Cε=	-0.1989
	Cσ=	-0.0454
	⊿SAR(%)=	0.34
10g	Cε=	-0.2559
	Cσ=	-0.0393
	⊿SAR(%)=	0.49

Date		28-Jul
	f(GHz)=	5.7
	⊿εr(%)=	-2.00
	⊿σ(%)=	-1.00
1g	Cε=	-0.1989
	Cσ=	-0.0455
	⊿SAR(%)=	0.44
10g	Cε=	-0.2557
	Cσ=	-0.0382
	⊿SAR(%)=	0.55

Date		28-Jul
	f(GHz)=	5.68
	⊿εr(%)=	-2.20
	⊿σ(%)=	-0.20
1g	Cε=	-0.1989
	Cσ=	-0.0454
	⊿SAR(%)=	0.45
10g	Cε=	-0.2559
	Cσ=	-0.0393
	⊿SAR(%)=	0.57

Date		30-Jul
	f(GHz)=	5.745
	⊿εr(%)=	-3.10
	⊿σ(%)=	2.50
1g	Cε=	-0.1987
	Cσ=	-0.0454
	⊿SAR(%)=	0.50
10g	Cε=	-0.2552
	Cσ=	-0.0354
	⊿SAR(%)=	0.70

Date		31-Jul
	f(GHz)=	5.745
	⊿εr(%)=	-2.20
	⊿σ(%)=	1.00
1g	Cε=	-0.1987
	Cσ=	-0.0454
	⊿SAR(%)=	0.39
10g	Cε=	-0.2552
	Cσ=	-0.0354
	⊿SAR(%)=	0.53

Date		30-Jul
	f(GHz)=	5.805
	⊿εr(%)=	-2.30
	⊿σ(%)=	1.00
1g	Cε=	-0.1986
	Cσ=	-0.0448
	⊿SAR(%)=	0.41
10g	Cε=	-0.2543
	Cσ=	-0.0313
	⊿SAR(%)=	0.55

Date		31-Jul
	f(GHz)=	5.805
	⊿εr(%)=	-3.10
	⊿σ(%)=	-4.40
1g	Cε=	-0.1986
	Cσ=	-0.0448
	⊿SAR(%)=	0.81
10g	Cε=	-0.2543
	Cσ=	-0.0313
	⊿SAR(%)=	0.93

Date		30-Jul
	f(GHz)=	5.825
	⊿εr(%)=	-3.30
	⊿σ(%)=	-3.40
1g	Cε=	-0.1985
	Cσ=	-0.0445
	⊿SAR(%)=	0.81
10g	Cε=	-0.2540
	Cσ=	-0.0299
	⊿SAR(%)=	0.94

Date		31-Jul
	f(GHz)=	5.825
	⊿εr(%)=	-1.30
	⊿σ(%)=	-1.10
1g	Cε=	-0.1985
	Cσ=	-0.0445
	⊿SAR(%)=	0.31
10g	Cε=	-0.2540
	Cσ=	-0.0299
	⊿SAR(%)=	0.36

(4)Result of Body SAR

5.2GHz Band

Main Antenna

BODY SAR MEASUREMENT RESULTS													
Frequency		Modulation	Measured power		Maximum tune-up tolerance limit		Phantom Section	EUT Set-up Conditions			Measured SAR(1g) [W/kg]	Measured SAR(1g) ⊿SAR correct [W/kg] *1	Reported SAR(1g) *2 [W/kg]
Channel	[MHz]		[dBm]	[mW]	[dBm]	[mW]		Antenna	Position	Separation [mm]			
Step.1 Position searching													
48	5240	11a 6Mbps	10.31	10.74	11.00	12.59	Flat	Main	Front	0	**0.314**	**N/A**	**0.368**
48	5240	11a 6Mbps	10.31	10.74	11.00	12.59	Flat	Main	Rear	0	**0.175**	**N/A**	**0.205**
48	5240	11a 6Mbps	10.31	10.74	11.00	12.59	Flat	Main	Bottom	0	**0.677**	**N/A**	**0.794**
Step.2 Mode change at the worst position													
48	5240	11n20 MCS0	10.09	10.21	11.00	12.59	Flat	Main	Bottom	0	**0.510**	**N/A**	**0.629**

*1 Refer to clause 9.2 (3).

*2 Reported SAR= Maximum tune-up tolerance limit [mW] / Measured power [mW] · Measured SAR(⊿SAR correct) [W/kg]

Sub Antenna

BODY SAR MEASUREMENT RESULTS													
Frequency		Modulation	Measured power		Maximum tune-up tolerance limit		Phantom Section	EUT Set-up Conditions			Measured SAR(1g) [W/kg]	Measured SAR(1g) ⊿SAR correct [W/kg] *1	Reported SAR(1g) *2 [W/kg]
Channel	[MHz]		[dBm]	[mW]	[dBm]	[mW]		Antenna	Position	Separation [mm]			
Step.1 Position searching													
36	5180	11a 6Mbps	10.03	10.07	11.00	12.59	Flat	Sub	Front	0	**0.398**	**N/A**	**0.498**
36	5180	11a 6Mbps	10.03	10.07	11.00	12.59	Flat	Sub	Rear	0	**0.199**	**N/A**	**0.249**
36	5180	11a 6Mbps	10.03	10.07	11.00	12.59	Flat	Sub	Top	0	**0.821**	**N/A**	**1.026**
Step.2 Mode change at the worst position													
36	5180	11n20 MCS0	9.8	9.55	11.00	12.59	Flat	Sub	Top	0	**0.755**	**N/A**	**0.995**
Step.3 Channel change (SAR level in Step.1 to 2 > 0.8 W/kg)													
48	5240	11a 6Mbps	9.97	9.93	11.00	12.59	Flat	Sub	Top	0	**0.679**	**N/A**	**0.861**
48	5240	11n20 MCS0	9.67	9.27	11.00	12.59	Flat	Sub	Top	0	**0.642**	**N/A**	**0.872**
Step.4 Repeat measurement of worst mode (Measured SAR level in Step.1 to 3 > 0.8 w/kg)													
36	5180	11a 6Mbps	10.03	10.07	11.00	12.59	Flat	Sub	Top	0	**0.769**	**N/A**	**0.961**

*1 Refer to clause 9.2 (3).

*2 Reported SAR= Maximum tune-up tolerance limit [mW] / Measured power [mW] · Measured SAR(⊿SAR correct) [W/kg]

5.3GHz Band
Main Antenna

BODY SAR MEASUREMENT RESULTS													
Frequency		Modulation	Measured power		Maximum tune-up tolerance limit		Phantom Section	EUT Set-up Conditions			Measured SAR(1g) [W/kg]	Measured SAR(1g) ⊿SAR correct [W/kg] *1	Reported SAR(1g) *2 [W/kg]
Channel	[MHz]		[dBm]	[mW]	[dBm]	[mW]		Antenna	Position	Separation [mm]			
Step.1 Position searching													
64	5320	11a 6Mbps	10.85	12.16	11.00	12.59	Flat	Main	Front	0	**0.326**	**N/A**	**0.337**
64	5320	11a 6Mbps	10.85	12.16	11.00	12.59	Flat	Main	Rear	0	**0.155**	**N/A**	**0.160**
64	5320	11a 6Mbps	10.85	12.16	11.00	12.59	Flat	Main	Bottom	0	**0.744**	**N/A**	**0.770**
Step.2 Mode change at the worst position													
64	5320	11n20 MCS0	10.67	11.67	11.00	12.59	Flat	Main	Bottom	0	**0.740**	**N/A**	**0.798**

Sub Antenna

BODY SAR MEASUREMENT RESULTS													
Frequency		Modulation	Measured power		Maximum tune-up tolerance limit		Phantom Section	EUT Set-up Conditions			Measured SAR(1g) [W/kg]	Measured SAR(1g) ⊿SAR correct [W/kg] *1	Reported SAR(1g) *2 [W/kg]
Channel	[MHz]		[dBm]	[mW]	[dBm]	[mW]		Antenna	Position	Separation [mm]			
Step.1 Position searching													
64	5320	11a 6Mbps	10.21	10.50	11.00	12.59	Flat	Sub	Front	0	**0.276**	**N/A**	**0.331**
64	5320	11a 6Mbps	10.21	10.50	11.00	12.59	Flat	Sub	Rear	0	**0.168**	**N/A**	**0.202**
64	5320	11a 6Mbps	10.21	10.50	11.00	12.59	Flat	Sub	Top	0	**0.698**	**N/A**	**0.837**
Step.2 Mode change at the worst position													
64	5320	11n20 MCS0	9.94	9.86	11.00	12.59	Flat	Sub	Top	0	**0.622**	**N/A**	**0.794**
Step.3 Channel change (SAR level in Step.1 to 2 > 0.8 W/kg)													
56	5280	11a 6Mbps	9.87	9.71	11.00	12.59	Flat	Sub	Top	0	**0.542**	**N/A**	**0.703**

*1 Refer to clause 9.2 (3).
*2 Reported SAR= Maximum tune-up tolerance limit [mW] / Measured power [mW] · Measured SAR(⊿SAR correct) [W/kg]

5.6GHz Band
Main Antenna

BODY SAR MEASUREMENT RESULTS													
Frequency		Modulation	Measured power		Maximum tune-up tolerance limit		Phantom Section	EUT Set-up Conditions			Measured SAR(1g) [W/kg]	Measured SAR(1g) ⊿SAR correct [W/kg] *1	Reported SAR(1g) *2 [W/kg]
Channel	[MHz]		[dBm]	[mW]	[dBm]	[mW]		Antenna	Position	Separation [mm]			
Step.1 Position searching													
100	5500	11a 6Mbps	9.23	8.38	10.00	10.00	Flat	Main	Front	0	**0.312**	**N/A**	**0.373**
100	5500	11a 6Mbps	9.23	8.38	10.00	10.00	Flat	Main	Rear	0	**0.105**	**N/A**	**0.125**
100	5500	11a 6Mbps	9.23	8.38	10.00	10.00	Flat	Main	Bottom	0	**0.498**	**N/A**	**0.595**
Step.2 Mode change at the worst position													
100	5500	11n20 MCS0	9.48	8.87	10.00	10.00	Flat	Main	Bottom	0	**0.552**	**N/A**	**0.622**
Step.3 Channel change (SAR level in Step.1 to 2 > 0.4 W/kg)													
112	5560	11a 6Mbps	9.01	7.96	10.00	10.00	Flat	Main	Bottom	0	**0.571**	**N/A**	**0.717**
128	5640	11a 6Mbps	8.89	7.74	10.00	10.00	Flat	Main	Bottom	0	**0.651**	**N/A**	**0.841**
136	5680	11a 6Mbps	8.75	7.50	10.00	10.00	Flat	Main	Bottom	0	**0.520**	**N/A**	**0.693**
112	5560	11n20 MCS0	8.83	7.64	10.00	10.00	Flat	Main	Bottom	0	**0.497**	**N/A**	**0.651**
128	5640	11n20 MCS0	8.72	7.45	10.00	10.00	Flat	Main	Bottom	0	**0.629**	**N/A**	**0.845**
136	5680	11n20 MCS0	8.56	7.18	10.00	10.00	Flat	Main	Bottom	0	**0.440**	**N/A**	**0.613**

Sub Antenna

BODY SAR MEASUREMENT RESULTS													
Frequency		Modulation	Measured power		Maximum tune-up tolerance limit		Phantom Section	EUT Set-up Conditions			Measured SAR(1g) [W/kg]	Measured SAR(1g) ⊿SAR correct [W/kg] *1	Reported SAR(1g) *2 [W/kg]
Channel	[MHz]		[dBm]	[mW]	[dBm]	[mW]		Antenna	Position	Separation [mm]			
Step.1 Position searching													
104	5520	11a 6Mbps	9.67	9.27	10.00	10.00	Flat	Sub	Front	0	**0.263**	**N/A**	**0.284**
104	5520	11a 6Mbps	9.67	9.27	10.00	10.00	Flat	Sub	Rear	0	**0.205**	**N/A**	**0.221**
104	5520	11a 6Mbps	9.67	9.27	10.00	10.00	Flat	Sub	Top	0	**0.886**	**N/A**	**0.956**
Step.2 Mode change at the worst position													
100	5500	11n20 MCS0	9.85	9.66	10.00	10.00	Flat	Sub	Top	0	**0.943**	**N/A**	**0.976**
Step.3 Channel change (SAR level in Step.1 to 2 > 0.4 W/kg)													
112	5560	11a 6Mbps	9.48	8.87	10.00	10.00	Flat	Sub	Top	0	**0.887**	**N/A**	**1.000**
128	5640	11a 6Mbps	9.20	8.32	10.00	10.00	Flat	Sub	Top	0	**0.929**	**N/A**	**1.117**
140	5700	11a 6Mbps	9.03	8.00	10.00	10.00	Flat	Sub	Top	0	**0.654**	**N/A**	**0.818**
112	5560	11n20 MCS0	9.18	8.28	10.00	10.00	Flat	Sub	Top	0	**0.857**	**N/A**	**1.035**
128	5640	11n20 MCS0	8.92	7.80	10.00	10.00	Flat	Sub	Top	0	**0.879**	**N/A**	**1.127**
136	5680	11n20 MCS0	8.74	7.48	10.00	10.00	Flat	Sub	Top	0	**0.772**	**N/A**	**1.032**
Step.4 Repeat measurement of worst mode (Measured SAR level in Step.1 to Step.2 > 0.8 w/kg)													
100	5500	11n20 MCS0	9.85	9.66	10.00	10.00	Flat	Sub	Top	0	**0.979**	**N/A**	**1.013**

*1 Refer to clause 9.2 (3).
*2 Reported SAR= Maximum tune-up tolerance limit [mW] / Measured power [mW] · Measured SAR(⊿SAR correct) [W/kg]

5.8GHz Band
Main Antenna

BODY SAR MEASUREMENT RESULTS													
Frequency		Modulation	Measured power		Maximum tune-up tolerance limit		Phantom Section	EUT Set-up Conditions			Measured SAR(1g) [W/kg]	Measured SAR(1g) ⊿SAR correct [W/kg] *1	Reported SAR(1g) *2 [W/kg]
Channel	[MHz]		[dBm]	[mW]	[dBm]	[mW]		Antenna	Position	Separation [mm]			
Step.1 Position searching													
165	5825	11a 6Mbps	8.37	6.87	10.00	10.00	Flat	Main	Front	0	**0.437**	**N/A**	**0.636**
165	5825	11a 6Mbps	8.37	6.87	10.00	10.00	Flat	Main	Rear	0	**0.090**	**N/A**	**0.131**
165	5825	11a 6Mbps	8.37	6.87	10.00	10.00	Flat	Main	Bottom	0	**0.688**	**N/A**	**1.001**
Step.2 Mode change at the worst position													
165	5825	11n20 MCS0	8.20	6.61	10.00	10.00	Flat	Main	Bottom	0	**0.689**	**N/A**	**1.043**
Step.3 Channel change (SAR level in Step.1 to 2 > 0.8 W/kg)													
149	5745	11a 6Mbps	8.06	6.40	10.00	10.00	Flat	Main	Bottom	0	**0.369**	**N/A**	**0.577**
161	5805	11a 6Mbps	8.25	6.68	10.00	10.00	Flat	Main	Bottom	0	**0.616**	**N/A**	**0.922**
149	5745	11n20 MCS0	7.90	6.17	10.00	10.00	Flat	Main	Bottom	0	**0.374**	**N/A**	**0.607**
161	5805	11n20 MCS0	8.03	6.35	10.00	10.00	Flat	Main	Bottom	0	**0.639**	**N/A**	**1.006**

*1 Refer to clause 9.2 (3).
*2 Reported SAR= Maximum tune-up tolerance limit [mW] / Measured power [mW] · Measured SAR(⊿SAR correct) [W/kg]

Sub Antenna

BODY SAR MEASUREMENT RESULTS													
Frequency		Modulation	Measured power		Maximum tune-up tolerance limit		Phantom Section	EUT Set-up Conditions			Measured SAR(1g) [W/kg]	Measured SAR(1g) ⊿SAR correct [W/kg] *1	Reported SAR(1g) *2 [W/kg]
Channel	[MHz]		[dBm]	[mW]	[dBm]	[mW]		Antenna	Position	Separation [mm]			
Step.1 Position searching													
165	5825	11a 6Mbps	8.57	7.19	10.00	10.00	Flat	Sub	Front	0	**0.106**	**N/A**	**0.147**
165	5825	11a 6Mbps	8.57	7.19	10.00	10.00	Flat	Sub	Rear	0	**0.177**	**N/A**	**0.246**
165	5825	11a 6Mbps	8.57	7.19	10.00	10.00	Flat	Sub	Top	0	**0.512**	**N/A**	**0.712**
Step.2 Mode change at the worst position													
165	5825	11n20 MCS0	8.33	6.81	10.00	10.00	Flat	Sub	Top	0	**0.489**	**N/A**	**0.718**

*1 Refer to clause 9.2 (3).
*2 Reported SAR= Maximum tune-up tolerance limit [mW] / Measured power [mW] · Measured SAR(⊿SAR correct) [W/kg]

SECTION 10 Test instruments

Control No.	Instrument	Manufacturer	Model No	Serial No	Test Item	Calibration Date * Interval(month)
MDAE-03	Data Acquisition Electronics	Schmid&Partner Engineering AG	DAE4	1372	SAR	2014/06/18 * 12
MPB-09	Dosimetric E-Field Probe	Schmid&Partner Engineering AG	EX3DV4	3922	SAR	2014/06/13 * 12
MPF-03	2mm Oval Flat Phantom	Schmid&Partner Engineering AG	QDOVA001BB	1203	SAR	2014/06/03 * 12
MOS-31	Thermo-Hygrometer	Custom	CTH-201	3101	SAR	2014/07/06 * 12
COTS-MSAR-03	Dasy5	Schmid&Partner Engineering AG	DASY5	-	SAR	-
MRBT-04	SAR robot	Schmid&Partner Engineering AG	TX60 Lspeag	F13/5PP1A1/A/01	SAR	2014/06/23 * 12
MDPK-03	Dielectric assessment kit	Schmid&Partner Engineering AG	DAK-3.5 Probe	0008	SAR	2014/03/04 * 12
COTS-MSAR-04	Dielectric assessment kit	Schmid&Partner Engineering AG	DAK		SAR	-
MVNA-01	Vector Network Analyzer	Schmid&Partner Engineering AG	PLANAR R140	0030913	SAR	2014/01/09 * 12
MPM-15	Power Meter	Agilent	N1914A	MY53060017	SAR	2014/06/20 * 12
MPSE-20	Power sensor	Agilent	N8482H	MY53050001	SAR	2014/06/20 * 12
MPSE-21	Power sensor	Agilent	N8482H	MY52460010	SAR	2014/07/02 * 12
MHDC-22	Directional Coupler	Agilent	87300B	14893A	SAR(2-18GHz)	Pre Check
MRFA-24	Pre Amplifier	R&K	R&K CGA020M602-2633R	B30550	SAR	2014/06/19 * 12
MSG-13	Signal Generator	Rohde & Schwarz	SMA 100A	103764	SAR	2014/06/19 * 12
MDA-07	Dipole Antenna	Schmid&Partner Engineering AG	D2450V2	713	SAR(D2450)	2013/09/10 * 12
MDA-08	Dipole Antenna	Schmid&Partner Engineering AG	D5GHzV2	1020	SAR(D5G)	2014/01/17 * 12
MRENT-120	Data Acquisition Electronics	Schmid&Partner Engineering AG	DAE4	518	SAR	2013/10/14 * 12
MPB-07	Dosimetric E-Field Probe	Schmid&Partner Engineering AG	EX3DV4	3825	SAR	2013/12/13 * 12
MPF-02	2mm Oval Flat Phantom	Schmid&Partner Engineering AG	QDOVA001BB	1045	SAR	2014/05/30 * 12
MDH-01	Device holder	Schmid&Partner Engineering AG	Mounting device for transmitter	-	SAR	Pre Check
MOS-10	Digtal thermometer	HANNA	Checktemp-2	MOS-10	SAR	2013/08/23 * 12
MOS-26	Thermo-Hygrometer	CUSTOM	CTH-201	A08Q29	SAR	2014/05/20 * 12
MRBT-02	SAR robot	Schmid&Partner Engineering AG	TX60 Lspeag	F10/5E3LA1/A/01	SAR	2014/05/09 * 12
MSL2450					Daily check	Target value ± 5%
MBBL3.5-5.8					Daily check	Target value ± 5%
SAR Room					Daily check Ambient Noise<0.012W/kg	

The expiration date of the calibration is the end of the expired month.
All equipment is calibrated with valid calibrations. Each measurement data is traceable to the national or international standards.

As for some calibrations performed after the tested dates, those test equipment have been controlled by means of an unbroken chains of calibrations.

APPENDIX 1 : SAR Measurement data

1. Evaluation procedure

The evaluation was performed with the following procedure:

Step 1: Measurement of the E-field at a fixed location above the ear point or central position of flat phantom was used as a reference value for assessing the power drop.

Step 2: The SAR distribution at the exposed side of head or body position was measured at a distance of each device from the inner surface of the shell. The area covered the entire dimension of the antenna of EUT and the horizontal grid spacing was 15 mm x 15 mm, 12 mm x 12 mm or 10mm x 10mm. Based on these data, the area of the maximum absorption was determined by spline interpolation.

Step 3: Around this point found in the Step 2 (area scan), a volume of 30mm x 30mm x 30mm or more was assessed by measuring 7 x 7 x 7 points at least for below 3GHz and a volume of 28 mm x 28mm x 22.5mm or more was assessed by measuring 8 x 8 x 6(ratio step method (*1)) points at least for 5GHz band.

And for any secondary peaks found in the Step2 which are within 2dB of maximum peak and not with this Step3 (Zoom scan) is repeated. On the basis of this data set, the spatial peak SAR value was evaluated under the following procedure:

(1). The data at the surface were extrapolated, since the center of the dipoles is 1mm(EX3DV4) away from the tip of the probe and the distance between the surface and the lowest measuring point is 1.3 mm. The extrapolation was based on a least square algorithm [4]. A polynomial of the fourth order was calculated through the points in z-axes.
This polynomial was then used to evaluate the points between the surface and the probe tip.

(2). The maximum interpolated value was searched with a straightforward algorithm. Around this maximum the SAR values averaged over the spatial volumes (1 g or 10 g) were computed by the 3D-Spline interpolation algorithm. The 3D-Spline is composed of three one-dimensional splines with the “Not a knot"-condition (in x, y and z-directions) [4], [5]. The volume was integrated with the trapezoidal-algorithm. One thousand points (10 x 10 x 10) were interpolated to calculate the average.

(3). All neighboring volumes were evaluated until no neighboring volume with a higher average value was found.

Step 4: Re-measurement of the E-field at the same location as in Step 1.

***1. Ratio step method parameters used;**
The first measurement point: 2mm from the phantom surface, the initial grid separation: 2mm, subsequent graded grid ratio: 1.5
These parameters comply with the requirement of the KDB 865664D01.

2. Measurement data

i) WLAN Body 2.4GHz Band

WLAN 11b 1Mbps Main Ant Front 0mm 2462MHz
Communication System: UID 0, WLAN (0); Communication System Band: 11b/g/n; Frequency: 2462 MHz; Duty Cycle: 1:1
Medium parameters used (interpolated): f = 2462 MHz; σ = 2.048 S/m; ε_r = 50.622; ρ = 1000 kg/m^3
Phantom section: Flat Section
Measurement Standard: DASY5 (IEEE/IEC/ANSI C63.19-2007)
DASY5 Configuration
Probe: EX3DV4 - SN3922; ConvF(7.36, 7.36, 7.36); Calibrated: 2014/06/13;
Sensor-Surface: 2mm (Mechanical Surface Detection)
Electronics: DAE4 Sn1372; Calibrated: 2014/06/18
Phantom: ELI v5.0 TP1207; Type: QDOVA001BB; Serial: TP:1207
Measurement SW: DASY52, Version 52.8 (8); SEMCAD X Version 14.6.10 (7331)

Area Scan (51x151x1): Interpolated grid: dx=1.200 mm, dy=1.200 mm
Maximum value of SAR (interpolated) = 0.274 W/kg

Zoom Scan (7x7x7)/Cube 0: Measurement grid: dx=5mm, dy=5mm, dz=5mm
Reference Value = 6.946 V/m; Power Drift = 0.05 dB
Peak SAR (extrapolated) = 0.442 W/kg
SAR(1 g) = 0.179 W/kg; SAR(10 g) = 0.067 W/kg
Maximum value of SAR (measured) = 0.289 W/kg

Date: 2014/08/01
Ambient Temp. : 24.0 degree.C. Liquid Temp.; 23.5 degree.C.

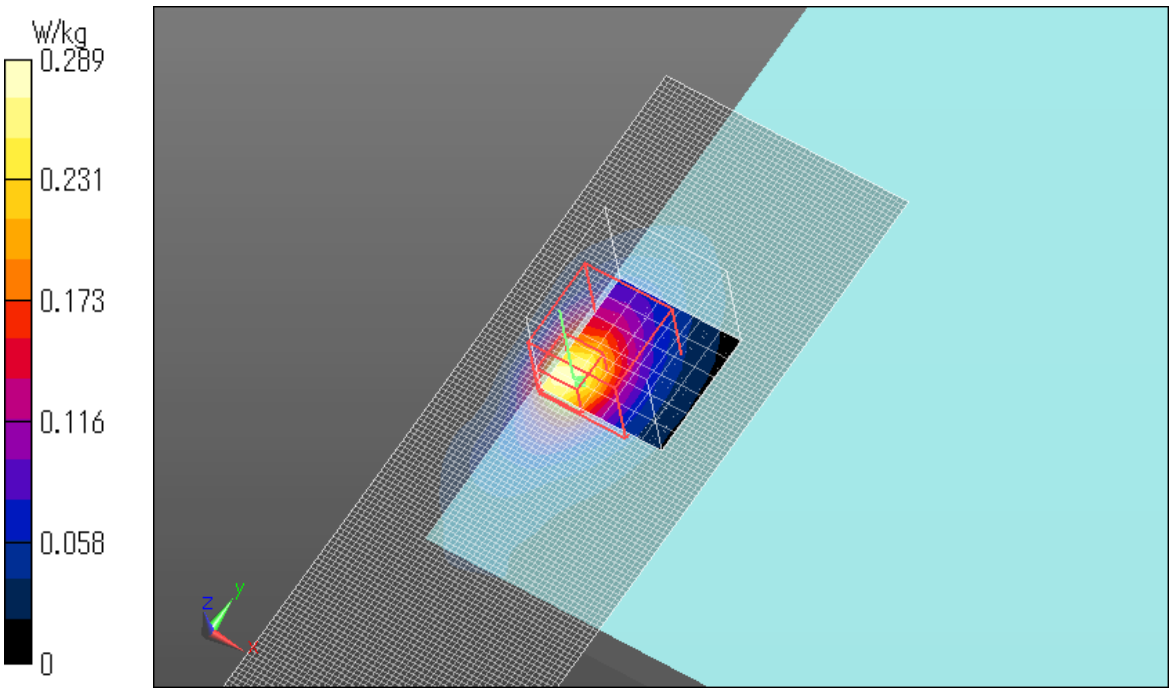

WLAN 11b 1Mbps Main Ant Rear 0mm 2462MHz
Communication System: UID 0, WLAN (0); Communication System Band: 11b/g/n; Frequency: 2462 MHz; Duty Cycle: 1:1
Medium parameters used (interpolated): f = 2462 MHz; σ = 2.048 S/m; ε_r = 50.622; ρ = 1000 kg/m^3
Phantom section: Flat Section
Measurement Standard: DASY5 (IEEE/IEC/ANSI C63.19-2007)
DASY5 Configuration
Probe: EX3DV4 - SN3922; ConvF(7.36, 7.36, 7.36); Calibrated: 2014/06/13;
Sensor-Surface: 2mm (Mechanical Surface Detection)
Electronics: DAE4 Sn1372; Calibrated: 2014/06/18
Phantom: ELI v5.0 TP1207; Type: QDOVA001BB; Serial: TP:1207
Measurement SW: DASY52, Version 52.8 (8); SEMCAD X Version 14.6.10 (7331)

Area Scan (51x101x1): Interpolated grid: dx=1.200 mm, dy=1.200 mm
Maximum value of SAR (interpolated) = 0.0943 W/kg

Zoom Scan (7x7x7)/Cube 0: Measurement grid: dx=5mm, dy=5mm, dz=5mm
Reference Value = 6.849 V/m; Power Drift = -0.10 dB
Peak SAR (extrapolated) = 0.126 W/kg
SAR(1 g) = 0.056 W/kg; SAR(10 g) = 0.022 W/kg
Maximum value of SAR (measured) = 0.0920 W/kg

Date: 2014/08/01
Ambient Temp. : 24.0 degree.C. Liquid Temp.; 23.5 degree.C.

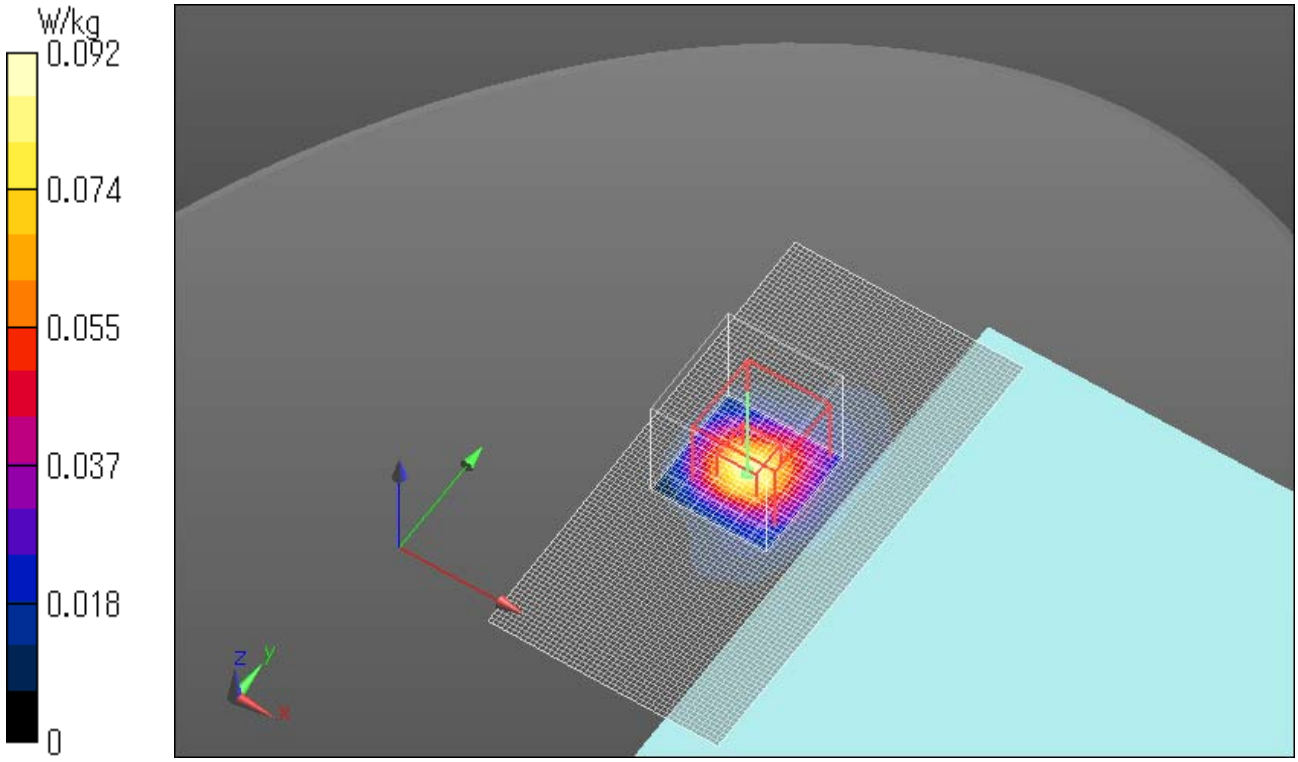

WLAN 11b 1Mbps Main Ant Bottom 0mm 2462MHz
Communication System: UID 0, WLAN (0); Communication System Band: 11b/g/n; Frequency: 2462 MHz; Duty Cycle: 1:1
Medium parameters used (interpolated): f = 2462 MHz; σ = 2.048 S/m; ε_r = 50.622; ρ = 1000 kg/m^3
Phantom section: Flat Section
Measurement Standard: DASY5 (IEEE/IEC/ANSI C63.19-2007)
DASY5 Configuration
Probe: EX3DV4 - SN3922; ConvF(7.36, 7.36, 7.36); Calibrated: 2014/06/13;
Sensor-Surface: 2mm (Mechanical Surface Detection)
Electronics: DAE4 Sn1372; Calibrated: 2014/06/18
Phantom: ELI v5.0 TP1207; Type: QDOVA001BB; Serial: TP:1207
Measurement SW: DASY52, Version 52.8 (8); SEMCAD X Version 14.6.10 (7331)

Area Scan (51x121x1): Interpolated grid: dx=1.200 mm, dy=1.200 mm
Maximum value of SAR (interpolated) = 0.347 W/kg

Zoom Scan (7x7x7)/Cube 0: Measurement grid: dx=5mm, dy=5mm, dz=5mm
Reference Value = 13.33 V/m; Power Drift = -0.01 dB
Peak SAR (extrapolated) = 0.578 W/kg
SAR(1 g) = 0.196 W/kg; SAR(10 g) = 0.071 W/kg
Maximum value of SAR (measured) = 0.359 W/kg

Date: 2014/08/01
Ambient Temp. : 24.0 degree.C. Liquid Temp.; 23.5 degree.C.

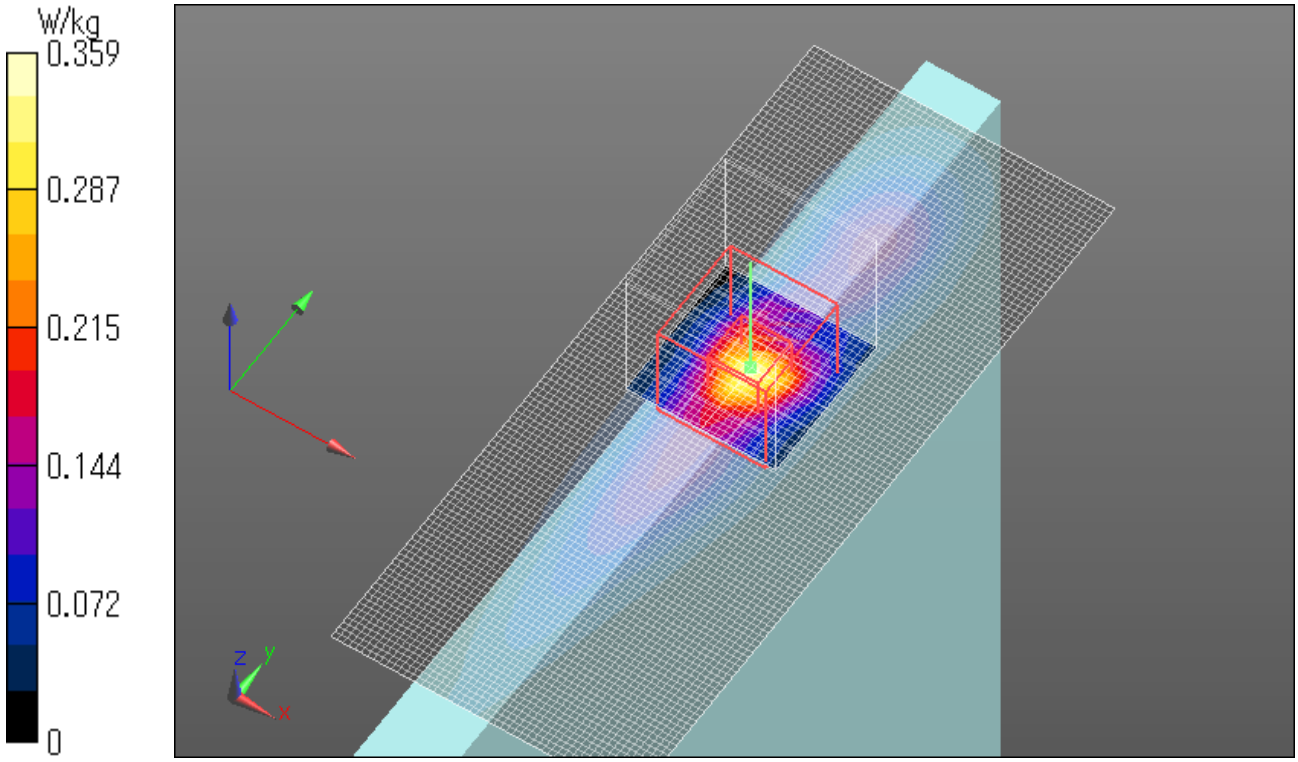

WLAN 11n20 MCS0 Main Ant Bottom 0mm 2462MHz
Communication System: UID 0, WLAN (0); Communication System Band: 11b/g/n; Frequency: 2462 MHz; Duty Cycle: 1:1
Medium parameters used (interpolated): f = 2462 MHz; σ = 2.048 S/m; ε_r = 50.622; ρ = 1000 kg/m^3
Phantom section: Flat Section
Measurement Standard: DASY5 (IEEE/IEC/ANSI C63.19-2007)
DASY5 Configuration
Probe: EX3DV4 - SN3922; ConvF(7.36, 7.36, 7.36); Calibrated: 2014/06/13;
Sensor-Surface: 2mm (Mechanical Surface Detection (Locations From Previous Scan Used)), Sensor-Surface: 2mm (Mechanical Surface Detection)
Electronics: DAE4 Sn1372; Calibrated: 2014/06/18
Phantom: ELI v5.0 TP1207; Type: QDOVA001BB; Serial: TP:1207
Measurement SW: DASY52, Version 52.8 (8); SEMCAD X Version 14.6.10 (7331)

Area Scan (51x121x1): Interpolated grid: dx=1.200 mm, dy=1.200 mm
Maximum value of SAR (interpolated) = 0.345 W/kg

Zoom Scan (7x7x7)/Cube 0: Measurement grid: dx=5mm, dy=5mm, dz=5mm
Reference Value = 14.23 V/m; Power Drift = -0.13 dB
Peak SAR (extrapolated) = 0.632 W/kg
SAR(1 g) = 0.206 W/kg; SAR(10 g) = 0.076 W/kg
Maximum value of SAR (measured) = 0.404 W/kg

Date: 2014/08/01
Ambient Temp. : 24.0 degree.C. Liquid Temp.; 23.5 degree.C.

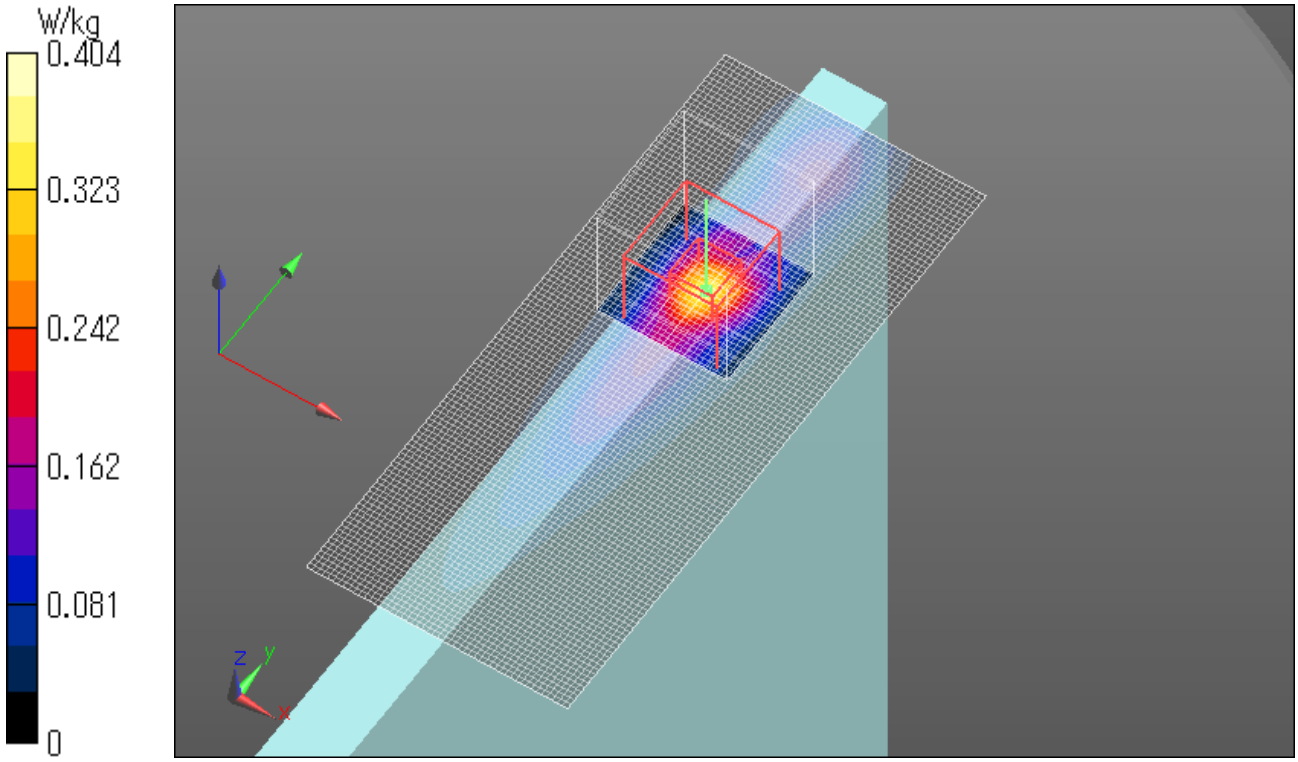

WLAN 11b 1Mbps Sub Ant Front 0mm 2462MHz
Communication System: UID 0, WLAN (0); Communication System Band: 11b/g/n; Frequency: 2462 MHz; Duty Cycle: 1:1
Medium parameters used (interpolated): f = 2462 MHz; σ = 2.048 S/m; ε_r = 50.622; ρ = 1000 kg/m^3
Phantom section: Flat Section
Measurement Standard: DASY5 (IEEE/IEC/ANSI C63.19-2007)
DASY5 Configuration
Probe: EX3DV4 - SN3922; ConvF(7.36, 7.36, 7.36); Calibrated: 2014/06/13;
Sensor-Surface: 2mm (Mechanical Surface Detection)
Electronics: DAE4 Sn1372; Calibrated: 2014/06/18
Phantom: ELI v5.0 TP1207; Type: QDOVA001BB; Serial: TP:1207
Measurement SW: DASY52, Version 52.8 (8); SEMCAD X Version 14.6.10 (7331)

Area Scan (71x121x1): Interpolated grid: dx=1.200 mm, dy=1.200 mm
Maximum value of SAR (interpolated) = 0.192 W/kg

Zoom Scan (7x7x7)/Cube 0: Measurement grid: dx=5mm, dy=5mm, dz=5mm
Reference Value = 10.11 V/m; Power Drift = -0.15 dB
Peak SAR (extrapolated) = 0.292 W/kg
SAR(1 g) = 0.129 W/kg; SAR(10 g) = 0.053 W/kg
Maximum value of SAR (measured) = 0.207 W/kg

Date: 2014/08/01
Ambient Temp. : 24.0 degree.C. Liquid Temp.; 23.5 degree.C.

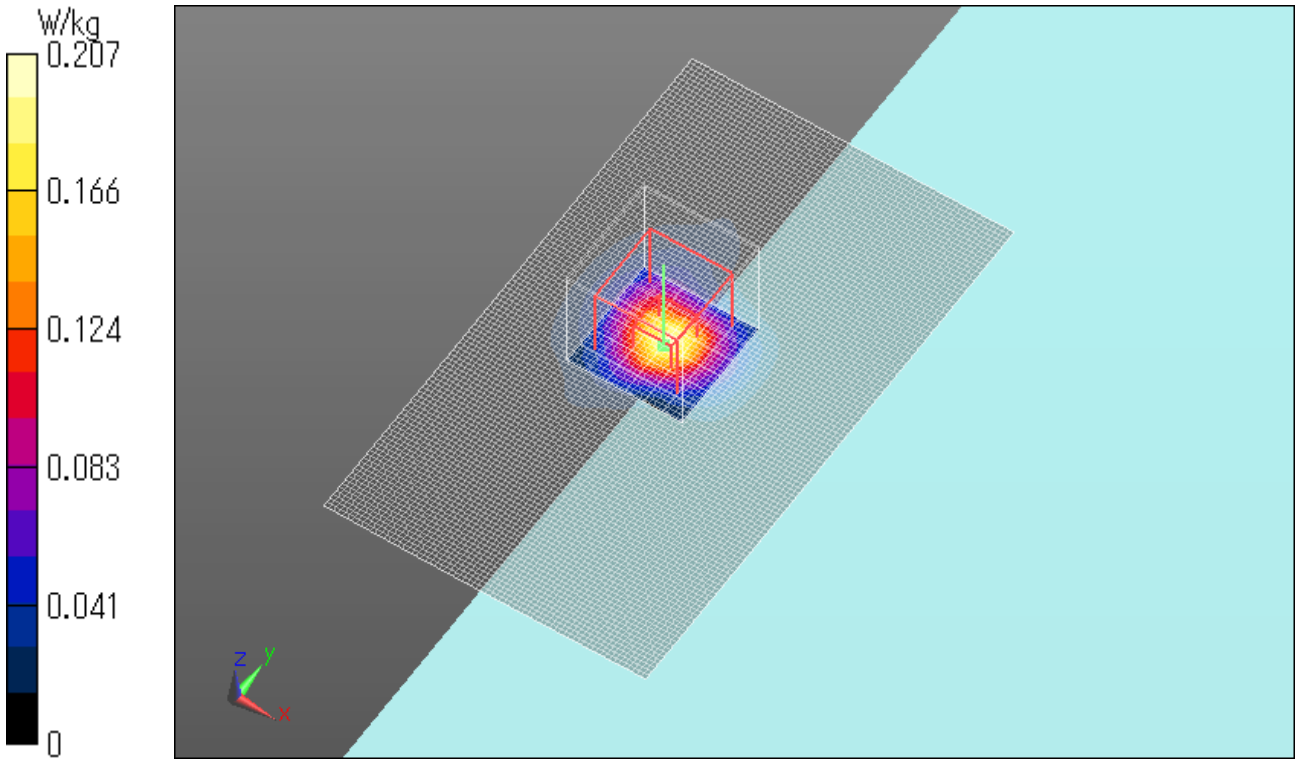

WLAN 11b 1Mbps Sub Ant Rear 0mm 2462MHz
Communication System: UID 0, WLAN (0); Communication System Band: 11b/g/n; Frequency: 2462 MHz; Duty Cycle: 1:1
Medium parameters used (interpolated): f = 2462 MHz; σ = 2.048 S/m; ε_r = 50.622; ρ = 1000 kg/m^3
Phantom section: Flat Section
Measurement Standard: DASY5 (IEEE/IEC/ANSI C63.19-2007)
DASY5 Configuration
Probe: EX3DV4 - SN3922; ConvF(7.36, 7.36, 7.36); Calibrated: 2014/06/13;
Sensor-Surface: 2mm (Mechanical Surface Detection (Locations From Previous Scan Used)), Sensor-Surface: 2mm (Mechanical Surface Detection)
Electronics: DAE4 Sn1372; Calibrated: 2014/06/18
Phantom: ELI v5.0 TP1207; Type: QDOVA001BB; Serial: TP:1207
Measurement SW: DASY52, Version 52.8 (8); SEMCAD X Version 14.6.10 (7331)

Area Scan (71x121x1): Interpolated grid: dx=1.200 mm, dy=1.200 mm
Maximum value of SAR (interpolated) = 0.114 W/kg

Zoom Scan (7x7x7)/Cube 0: Measurement grid: dx=5mm, dy=5mm, dz=5mm
Reference Value = 6.150 V/m; Power Drift = -0.16 dB
Peak SAR (extrapolated) = 0.214 W/kg
SAR(1 g) = 0.082 W/kg; SAR(10 g) = 0.037 W/kg
Maximum value of SAR (measured) = 0.125 W/kg

Date: 2014/08/01
Ambient Temp. : 24.0 degree.C. Liquid Temp.; 23.5 degree.C.

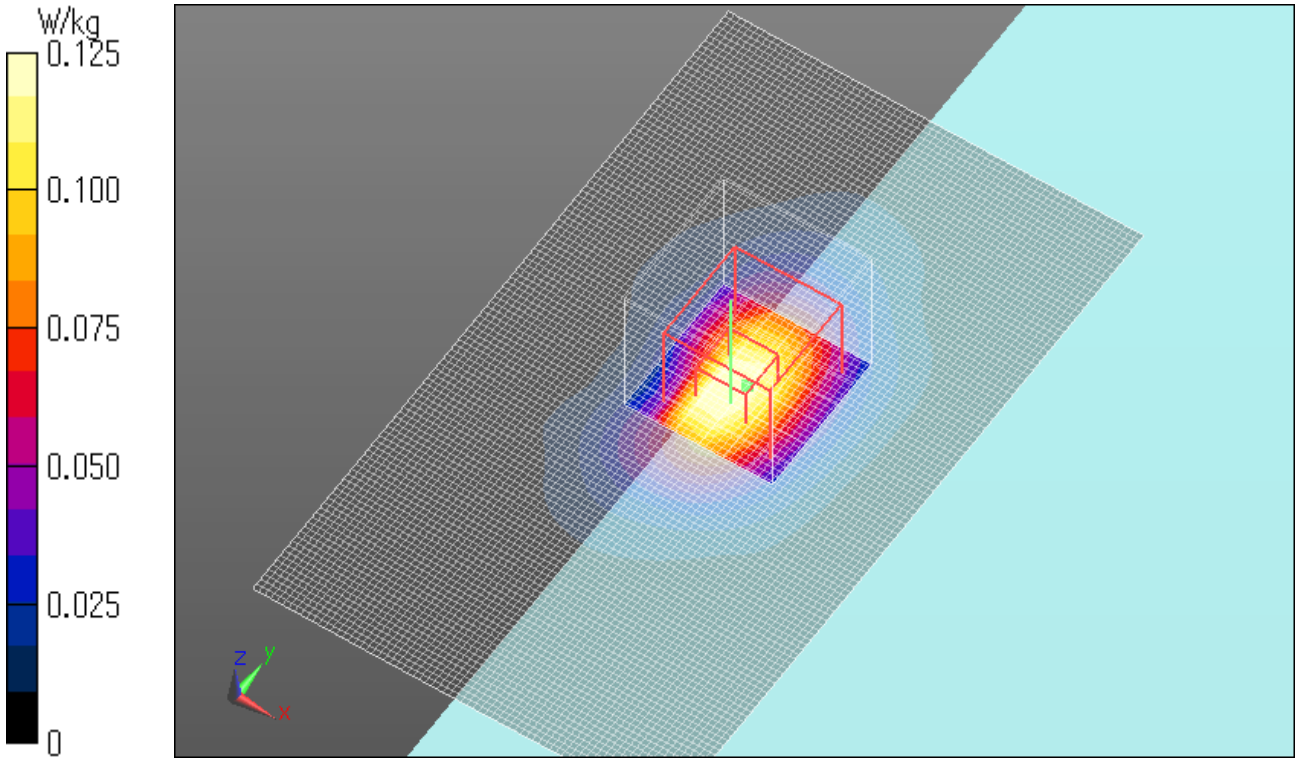

WLAN 11b 1Mbps Sub Ant Top 0mm 2462MHz
Communication System: UID 0, WLAN (0); Communication System Band: 11b/g/n; Frequency: 2462 MHz; Duty Cycle: 1:1
Medium parameters used (interpolated): f = 2462 MHz; σ = 2.048 S/m; ε_r = 50.622; ρ = 1000 kg/m^3
Phantom section: Flat Section
Measurement Standard: DASY5 (IEEE/IEC/ANSI C63.19-2007)
DASY5 Configuration
Probe: EX3DV4 - SN3922; ConvF(7.36, 7.36, 7.36); Calibrated: 2014/06/13;
Sensor-Surface: 2mm (Mechanical Surface Detection)
Electronics: DAE4 Sn1372; Calibrated: 2014/06/18
Phantom: ELI v5.0 TP1207; Type: QDOVA001BB; Serial: TP:1207
Measurement SW: DASY52, Version 52.8 (8); SEMCAD X Version 14.6.10 (7331)

Area Scan (51x151x1): Interpolated grid: dx=1.200 mm, dy=1.200 mm
Maximum value of SAR (interpolated) = 0.345 W/kg

Zoom Scan (7x7x7)/Cube 0: Measurement grid: dx=5mm, dy=5mm, dz=5mm
Reference Value = 9.522 V/m; Power Drift = 0.12 dB
Peak SAR (extrapolated) = 0.781 W/kg
SAR(1 g) = 0.268 W/kg; SAR(10 g) = 0.090 W/kg
Maximum value of SAR (measured) = 0.504 W/kg

Date: 2014/08/01
Ambient Temp. : 24.0 degree.C. Liquid Temp.; 23.5 degree.C.

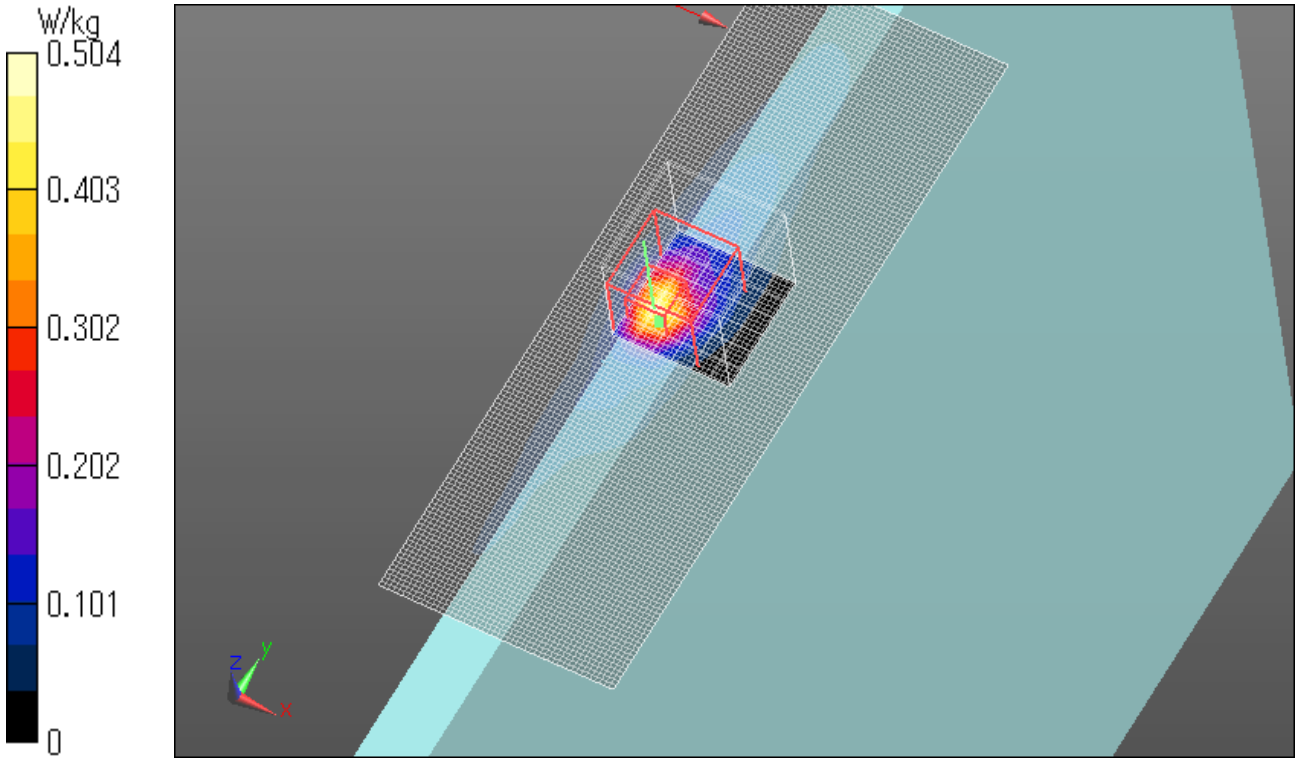

WLAN 11n20 MCS0 Sub Ant Top 0mm 2462MHz
Communication System: UID 0, WLAN (0); Communication System Band: 11b/g/n; Frequency: 2462 MHz; Duty Cycle: 1:1
Medium parameters used (interpolated): f = 2462 MHz; σ = 2.048 S/m; ε_r = 50.622; ρ = 1000 kg/m^3
Phantom section: Flat Section
Measurement Standard: DASY5 (IEEE/IEC/ANSI C63.19-2007)
DASY5 Configuration
Probe: EX3DV4 - SN3922; ConvF(7.36, 7.36, 7.36); Calibrated: 2014/06/13;
Sensor-Surface: 2mm (Mechanical Surface Detection (Locations From Previous Scan Used)), Sensor-Surface: 2mm (Mechanical Surface Detection)
Electronics: DAE4 Sn1372; Calibrated: 2014/06/18
Phantom: ELI v5.0 TP1207; Type: QDOVA001BB; Serial: TP:1207
Measurement SW: DASY52, Version 52.8 (8); SEMCAD X Version 14.6.10 (7331)

Area Scan (51x151x1): Interpolated grid: dx=1.200 mm, dy=1.200 mm
Maximum value of SAR (interpolated) = 0.445 W/kg

Zoom Scan (7x7x7)/Cube 0: Measurement grid: dx=5mm, dy=5mm, dz=5mm
Reference Value = 15.53 V/m; Power Drift = 0.03 dB
Peak SAR (extrapolated) = 0.837 W/kg
SAR(1 g) = 0.277 W/kg; SAR(10 g) = 0.097 W/kg
Maximum value of SAR (measured) = 0.481 W/kg

Date: 2014/08/01
Ambient Temp. : 24.0 degree.C. Liquid Temp.; 23.5 degree.C.

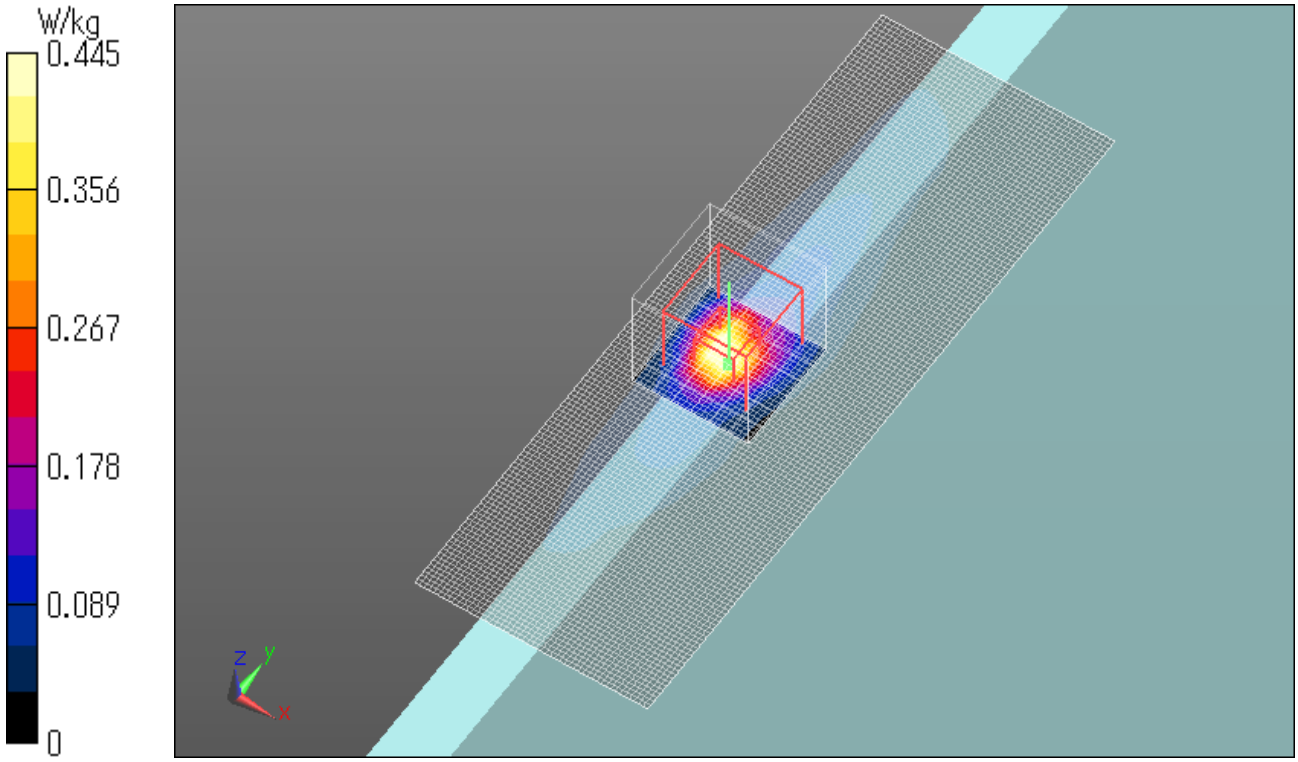

ii) WLAN Body 5.2GHz Band

WLAN 11a 6Mbps Main Ant Front 0mm 5240MHz
Communication System: UID 0, WLAN 11a/b/g/n (0); Communication System Band: 11a/n (W52 53); Frequency: 5240 MHz; Duty Cycle: 1:1
Medium parameters used: f = 5240 MHz; σ = 5.36 S/m; ε_r = 48.212; ρ = 1000 kg/m^3
Phantom section: Flat Section
Measurement Standard: DASY5 (IEEE/IEC/ANSI C63.19-2007)
DASY5 Configuration
Probe: EX3DV4 - SN3825; ConvF(4.38, 4.38, 4.38); Calibrated: 2013/12/13;
Sensor-Surface: 2mm (Mechanical Surface Detection)
Electronics: DAE4 Sn518; Calibrated: 2013/10/14
Phantom: ELI 4.0; Type: QDOVA001BB; Serial: 1045
Measurement SW: DASY52, Version 52.8 (7); SEMCAD X Version 14.6.10 (7164)

Area Scan (91x131x1): Interpolated grid: dx=1.000 mm, dy=1.000 mm
Maximum value of SAR (interpolated) = 0.481 W/kg

Zoom Scan (8x8x6)/Cube 0: Measurement grid: dx=4mm, dy=4mm, dz=2mm
Reference Value = 11.577 V/m; Power Drift = 0.03 dB
Peak SAR (extrapolated) = 1.25 W/kg
SAR(1 g) = 0.314 W/kg; SAR(10 g) = 0.144 W/kg
Maximum value of SAR (measured) = 0.592 W/kg

Date: 2014/07/24
Ambient Temp. : 24.0 degree.C. Liquid Temp.; 23.5 degree.C.

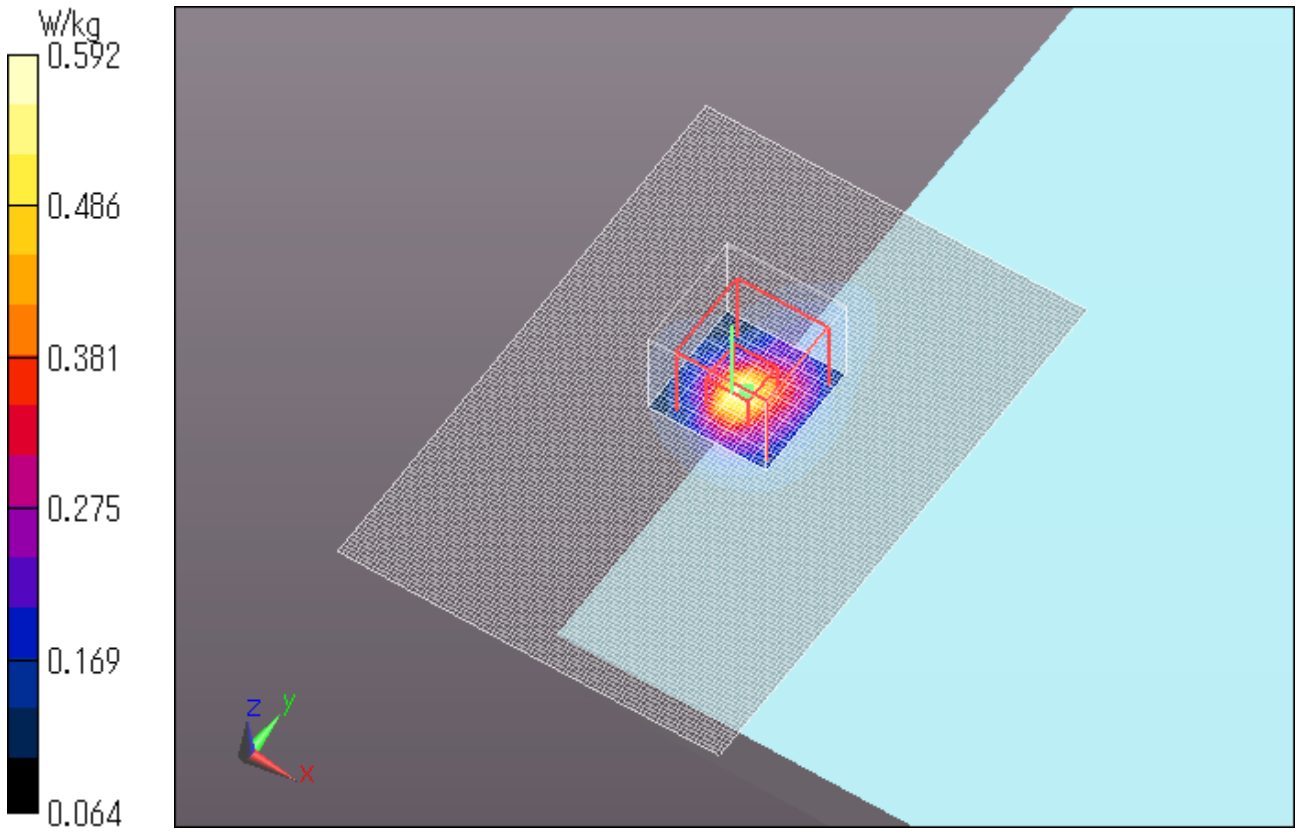

WLAN 11a 6Mbps Main Ant Rear 0mm 5240MHz
Communication System: UID 0, WLAN 11a/b/g/n (0); Communication System Band: 11a/n (W52 53); Frequency: 5240 MHz; Duty Cycle: 1:1
Medium parameters used: f = 5240 MHz; σ = 5.36 S/m; ε_r = 48.212; ρ = 1000 kg/m^3
Phantom section: Flat Section
Measurement Standard: DASY5 (IEEE/IEC/ANSI C63.19-2007)
DASY5 Configuration
Probe: EX3DV4 - SN3825; ConvF(4.38, 4.38, 4.38); Calibrated: 2013/12/13;
Sensor-Surface: 2mm (Mechanical Surface Detection)
Electronics: DAE4 Sn518; Calibrated: 2013/10/14
Phantom: ELI 4.0; Type: QDOVA001BB; Serial: 1045
Measurement SW: DASY52, Version 52.8 (7); SEMCAD X Version 14.6.10 (7164)

Area Scan (91x151x1): Interpolated grid: dx=1.000 mm, dy=1.000 mm
Maximum value of SAR (interpolated) = 0.285 W/kg

Zoom Scan (8x8x6)/Cube 0: Measurement grid: dx=4mm, dy=4mm, dz=2mm
Reference Value = 7.823 V/m; Power Drift = 0.06 dB
Peak SAR (extrapolated) = 0.529 W/kg
SAR(1 g) = 0.175 W/kg; SAR(10 g) = 0.105 W/kg
Maximum value of SAR (measured) = 0.260 W/kg

Date: 2014/07/24
Ambient Temp. : 24.0 degree.C. Liquid Temp.; 23.5 degree.C.

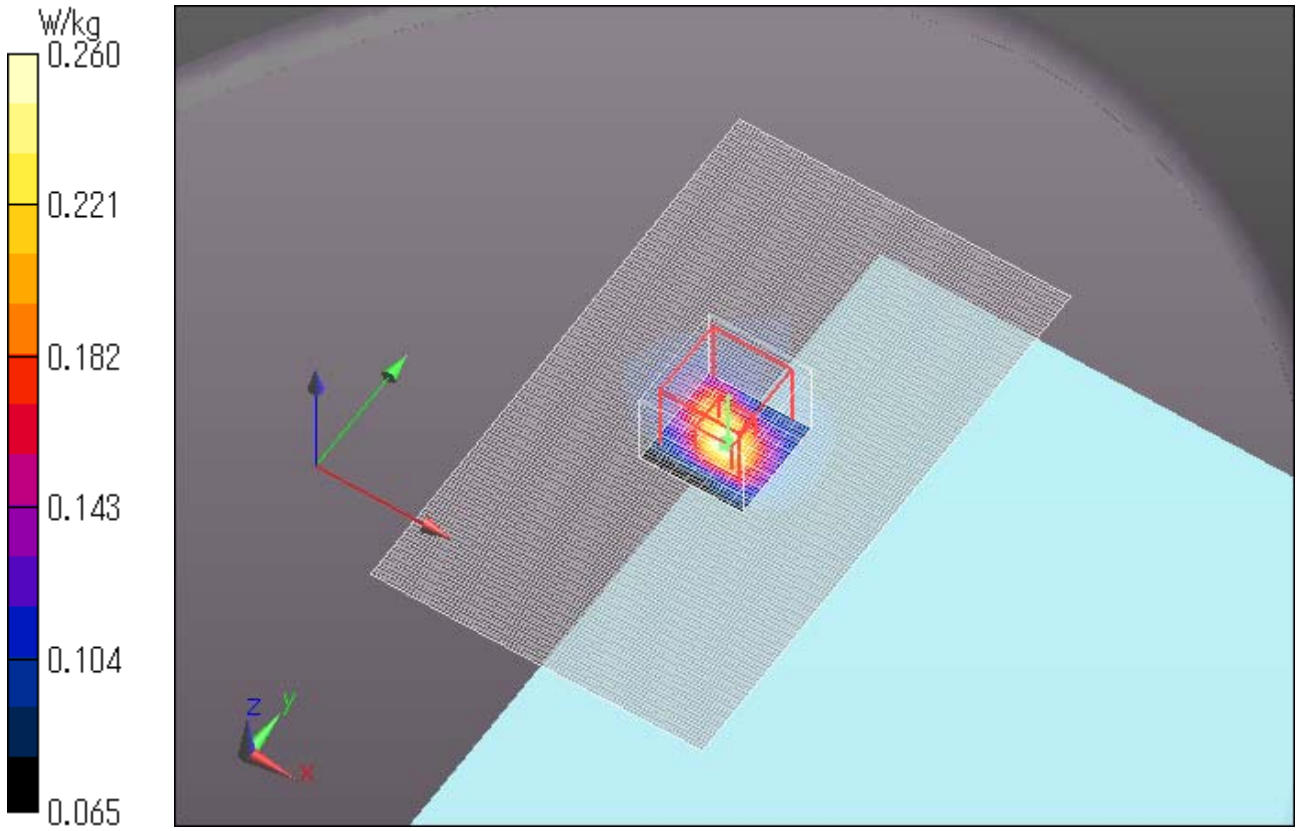

WLAN 11a 6Mbps Main Ant Bottom 0mm 5240MHz
Communication System: UID 0, WLAN 11a/b/g/n (0); Communication System Band: 11a/n (W52 53); Frequency: 5240 MHz; Duty Cycle: 1:1
Medium parameters used: f = 5240 MHz; σ = 5.36 S/m; ε_r = 48.212; ρ = 1000 kg/m^3
Phantom section: Flat Section
Measurement Standard: DASY5 (IEEE/IEC/ANSI C63.19-2007)
DASY5 Configuration
Probe: EX3DV4 - SN3825; ConvF(4.38, 4.38, 4.38); Calibrated: 2013/12/13;
Sensor-Surface: 2mm (Mechanical Surface Detection)
Electronics: DAE4 Sn518; Calibrated: 2013/10/14
Phantom: ELI 4.0; Type: QDOVA001BB; Serial: 1045
Measurement SW: DASY52, Version 52.8 (7); SEMCAD X Version 14.6.10 (7164)

Area Scan (91x151x1): Interpolated grid: dx=1.000 mm, dy=1.000 mm
Maximum value of SAR (interpolated) = 1.30 W/kg

Zoom Scan (8x8x6)/Cube 0: Measurement grid: dx=4mm, dy=4mm, dz=2mm
Reference Value = 18.147 V/m; Power Drift = -0.08 dB
Peak SAR (extrapolated) = 3.28 W/kg
SAR(1 g) = 0.677 W/kg; SAR(10 g) = 0.198 W/kg
Maximum value of SAR (measured) = 1.55 W/kg

Date: 2014/07/24
Ambient Temp. : 24.0 degree.C. Liquid Temp.; 23.5 degree.C.

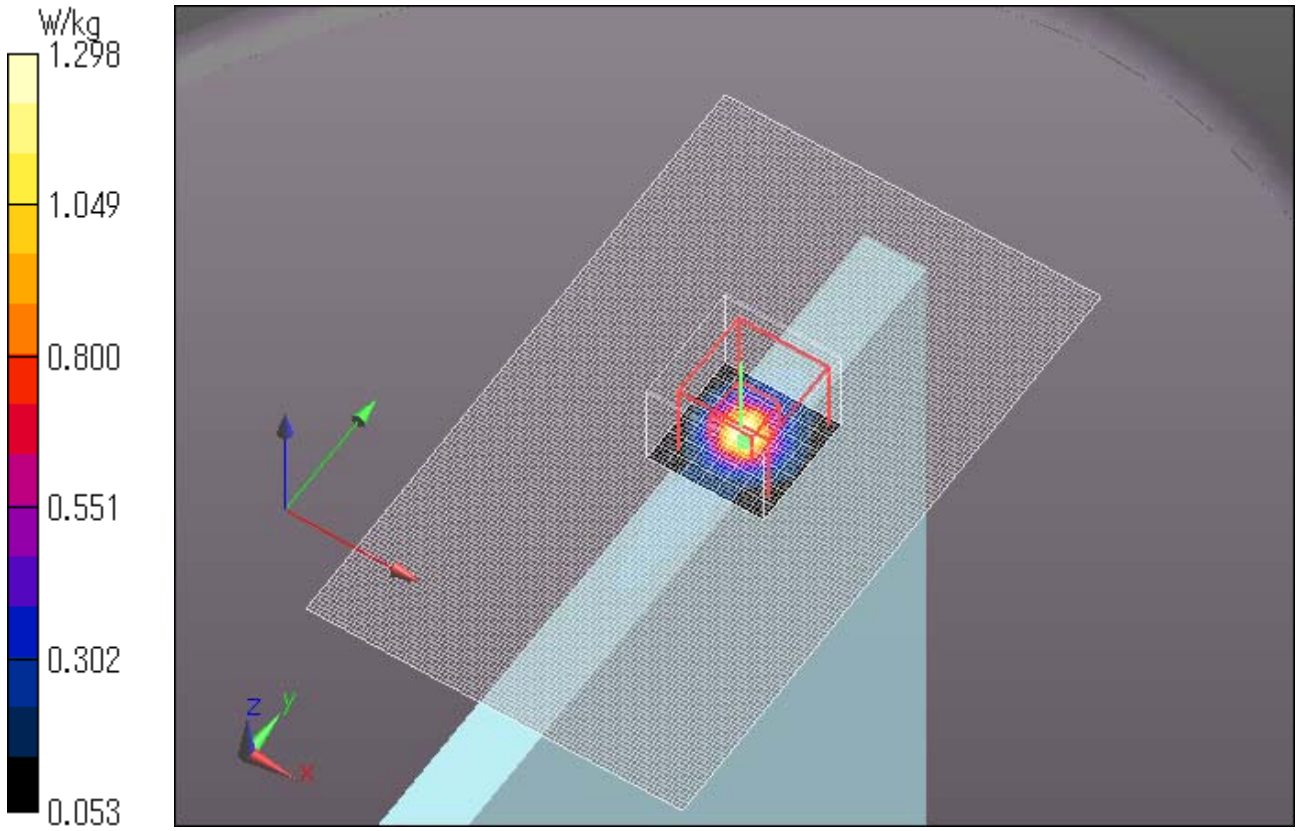

WLAN 11n20 MCS0 Main Ant Bottom 0mm 5240MHz
Communication System: UID 0, WLAN 11a/b/g/n (0); Communication System Band: 11a/n (W52 53); Frequency: 5240 MHz; Duty Cycle: 1:1
Medium parameters used: f = 5240 MHz; σ = 5.36 S/m; ε_r = 48.212; ρ = 1000 kg/m^3
Phantom section: Flat Section
Measurement Standard: DASY5 (IEEE/IEC/ANSI C63.19-2007)
DASY5 Configuration
Probe: EX3DV4 - SN3825; ConvF(4.38, 4.38, 4.38); Calibrated: 2013/12/13;
Sensor-Surface: 2mm (Mechanical Surface Detection)
Electronics: DAE4 Sn518; Calibrated: 2013/10/14
Phantom: ELI 4.0; Type: QDOVA001BB; Serial: 1045
Measurement SW: DASY52, Version 52.8 (8); SEMCAD X Version 14.6.10 (7331)

Area Scan (91x151x1): Interpolated grid: dx=1.000 mm, dy=1.000 mm
Maximum value of SAR (interpolated) = 1.16 W/kg

Zoom Scan (8x8x6)/Cube 0: Measurement grid: dx=4mm, dy=4mm, dz=2mm
Reference Value = 16.75 V/m; Power Drift = 0.07 dB
Peak SAR (extrapolated) = 2.69 W/kg
SAR(1 g) = 0.510 W/kg; SAR(10 g) = 0.121 W/kg
Maximum value of SAR (measured) = 1.15 W/kg

Date: 2014/07/24
Ambient Temp. : 24.0 degree.C. Liquid Temp.; 23.5 degree.C.

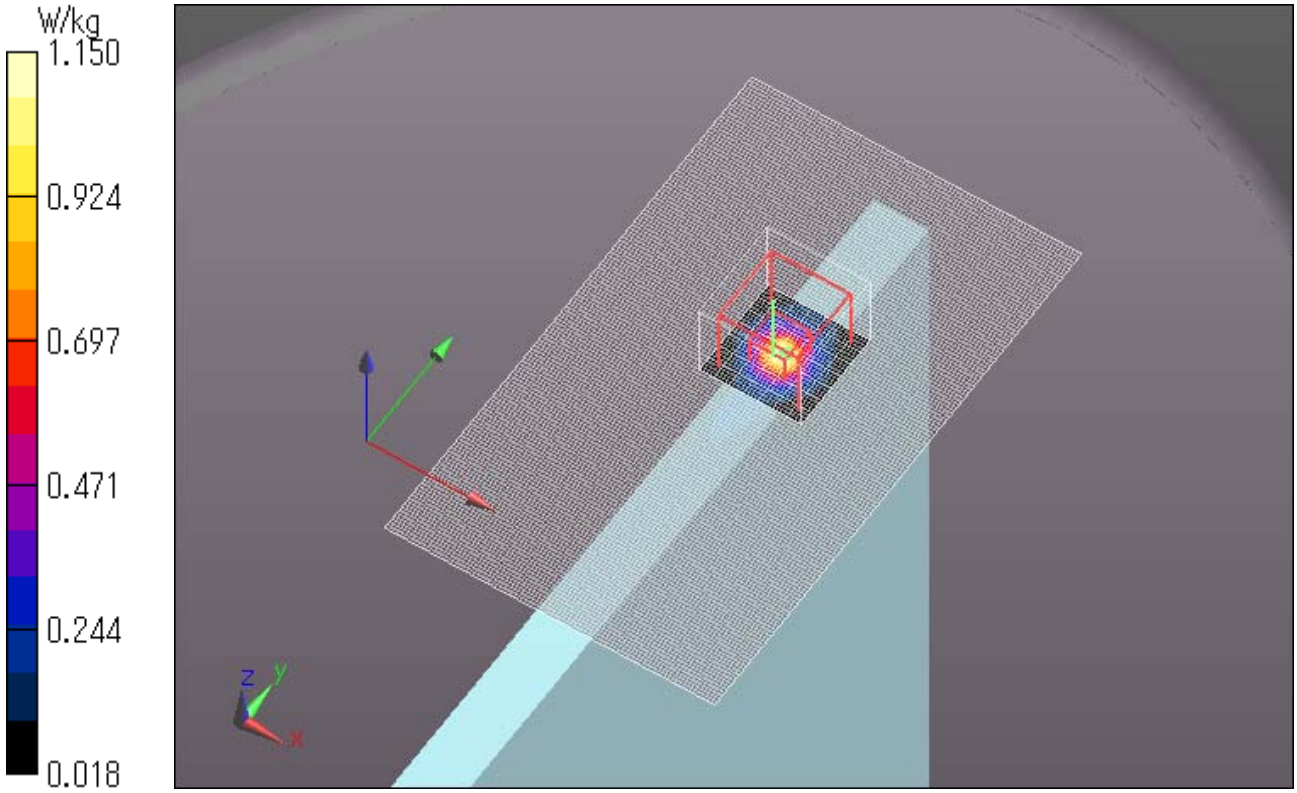

WLAN 11a 6Mbps Sub Ant Front 0mm 5180MHz
Communication System: UID 0, WLAN 11a/b/g/n (0); Communication System Band: 11a/n (W52 53); Frequency: 5180 MHz; Duty Cycle: 1:1
Medium parameters used: f = 5180 MHz; σ = 5.119 S/m; ε_r = 48.295; ρ = 1000 kg/m^3
Phantom section: Flat Section
Measurement Standard: DASY5 (IEEE/IEC/ANSI C63.19-2007)
DASY5 Configuration
Probe: EX3DV4 - SN3825; ConvF(4.38, 4.38, 4.38); Calibrated: 2013/12/13;
Sensor-Surface: 2mm (Mechanical Surface Detection)
Electronics: DAE4 Sn518; Calibrated: 2013/10/14
Phantom: ELI 4.0; Type: QDOVA001BB; Serial: 1045
Measurement SW: DASY52, Version 52.8 (7); SEMCAD X Version 14.6.10 (7164)

Area Scan (91x151x1): Interpolated grid: dx=1.000 mm, dy=1.000 mm
Maximum value of SAR (interpolated) = 0.958 W/kg

Zoom Scan (8x8x6)/Cube 0: Measurement grid: dx=4mm, dy=4mm, dz=2mm
Reference Value = 14.535 V/m; Power Drift = -0.11 dB
Peak SAR (extrapolated) = 1.83 W/kg
SAR(1 g) = 0.398 W/kg; SAR(10 g) = 0.109 W/kg
Maximum value of SAR (measured) = 0.921 W/kg

Date: 2014/07/24
Ambient Temp. : 24.0 degree.C. Liquid Temp.; 23.5 degree.C.

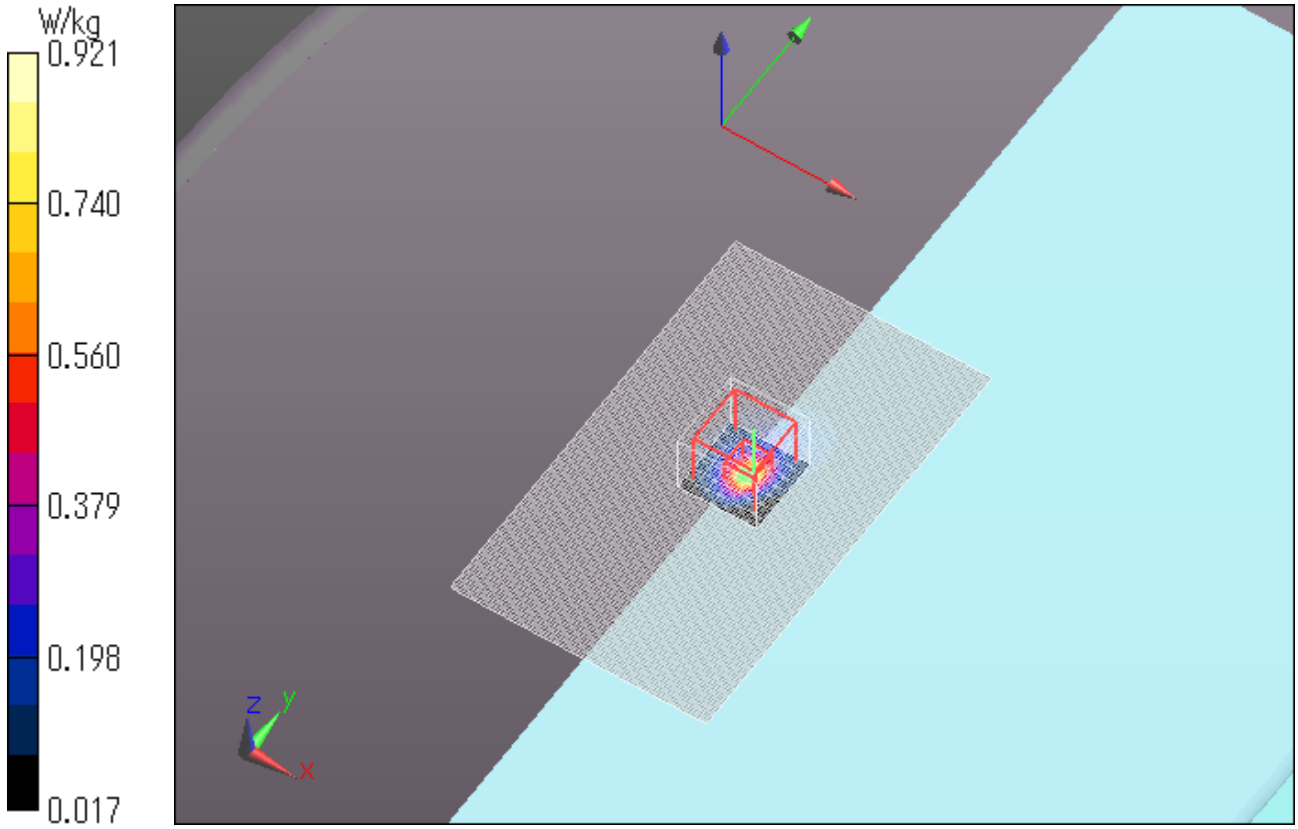

WLAN 11a 6Mbps Sub Ant Rear 0mm 5180MHz
Communication System: UID 0, WLAN 11a/b/g/n (0); Communication System Band: 11a/n (W52 53); Frequency: 5180 MHz; Duty Cycle: 1:1
Medium parameters used: f = 5180 MHz; σ = 5.119 S/m; ε_r = 48.295; ρ = 1000 kg/m^3
Phantom section: Flat Section
Measurement Standard: DASY5 (IEEE/IEC/ANSI C63.19-2007)
DASY5 Configuration
Probe: EX3DV4 - SN3825; ConvF(4.38, 4.38, 4.38); Calibrated: 2013/12/13;
Sensor-Surface: 2mm (Mechanical Surface Detection)
Electronics: DAE4 Sn518; Calibrated: 2013/10/14
Phantom: ELI 4.0; Type: QDOVA001BB; Serial: 1045
Measurement SW: DASY52, Version 52.8 (7); SEMCAD X Version 14.6.10 (7164)

Area Scan (91x151x1): Interpolated grid: dx=1.000 mm, dy=1.000 mm
Maximum value of SAR (interpolated) = 0.402 W/kg

Zoom Scan (8x8x6)/Cube 0: Measurement grid: dx=4mm, dy=4mm, dz=2mm
Reference Value = 10.031 V/m; Power Drift = -0.06 dB
Peak SAR (extrapolated) = 0.740 W/kg
SAR(1 g) = 0.199 W/kg; SAR(10 g) = 0.071 W/kg
Maximum value of SAR (measured) = 0.421 W/kg

Date: 2014/07/24
Ambient Temp. : 24.0 degree.C. Liquid Temp.; 23.5 degree.C.

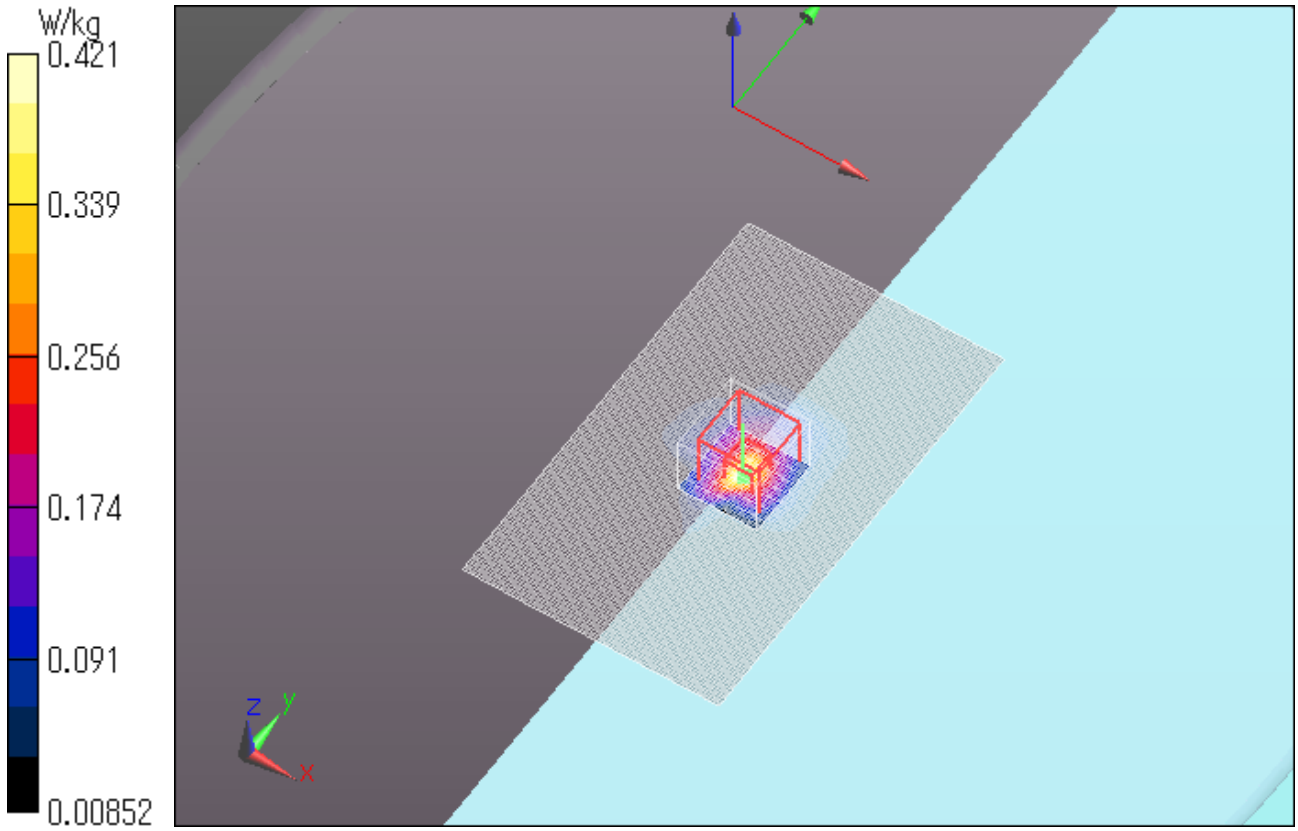

WLAN 11a 6Mbps Sub Ant Top 0mm 5180MHz
Communication System: UID 0, WLAN 11a/b/g/n (0); Communication System Band: 11a/n (W52 53); Frequency: 5180 MHz; Duty Cycle: 1:1
Medium parameters used: f = 5180 MHz; σ = 5.119 S/m; ε_r = 48.295; ρ = 1000 kg/m^3
Phantom section: Flat Section
Measurement Standard: DASY5 (IEEE/IEC/ANSI C63.19-2007)
DASY5 Configuration
Probe: EX3DV4 - SN3825; ConvF(4.38, 4.38, 4.38); Calibrated: 2013/12/13;
Sensor-Surface: 2mm (Mechanical Surface Detection)
Electronics: DAE4 Sn518; Calibrated: 2013/10/14
Phantom: ELI 4.0; Type: QDOVA001BB; Serial: 1045
Measurement SW: DASY52, Version 52.8 (7); SEMCAD X Version 14.6.10 (7164)

Area Scan (91x151x1): Interpolated grid: dx=1.000 mm, dy=1.000 mm
Maximum value of SAR (interpolated) = 2.97 W/kg

Zoom Scan (8x8x6)/Cube 0: Measurement grid: dx=4mm, dy=4mm, dz=2mm
Reference Value = 18.801 V/m; Power Drift = 0.08 dB
Peak SAR (extrapolated) = 3.48 W/kg
SAR(1 g) = 0.821 W/kg; SAR(10 g) = 0.289 W/kg
Maximum value of SAR (measured) = 1.67 W/kg

Date: 2014/07/24
Ambient Temp. : 24.0 degree.C. Liquid Temp.; 23.5 degree.C.

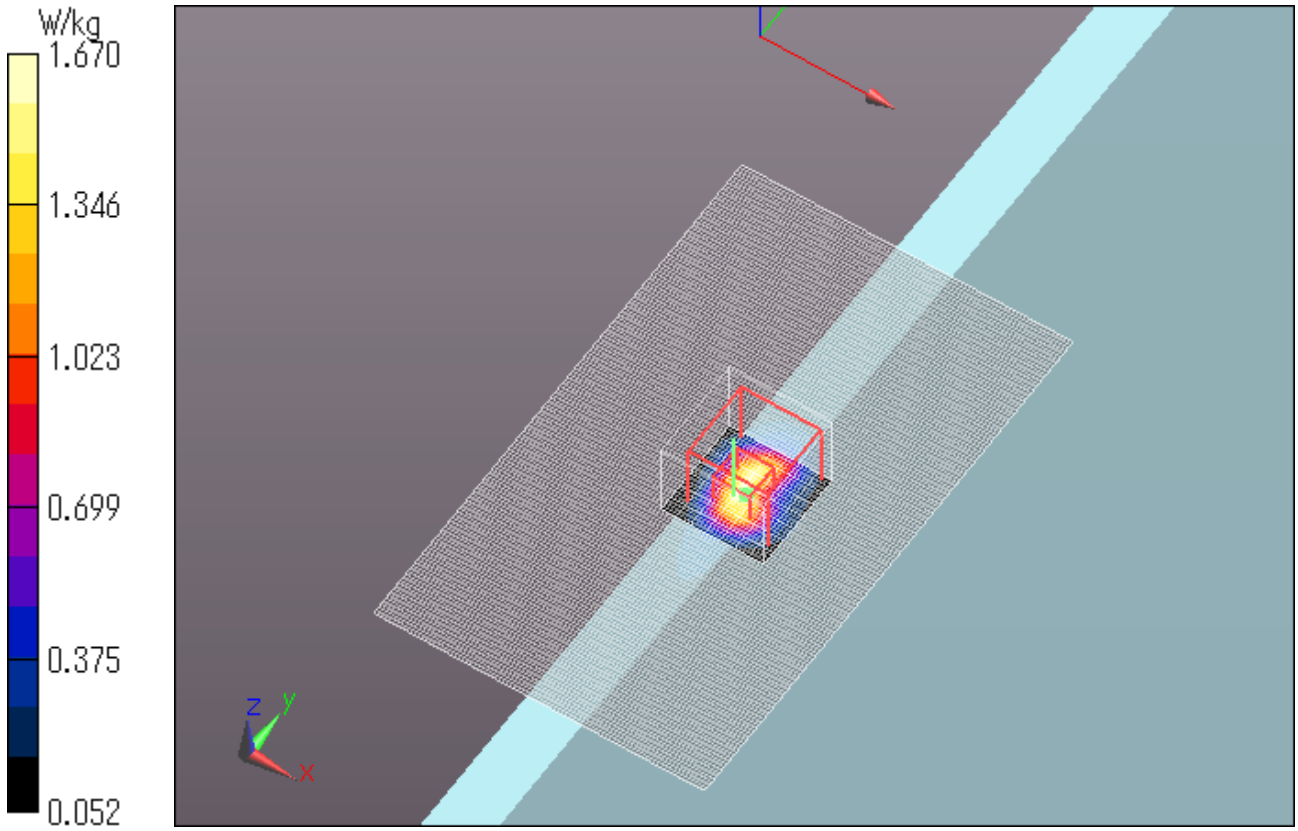

WLAN 11n20 MCS0 Sub Ant Top 0mm 5180MHz
Communication System: UID 0, WLAN 11a/b/g/n (0); Communication System Band: 11a/n (W52 53); Frequency: 5180 MHz; Duty Cycle: 1:1
Medium parameters used: f = 5180 MHz; σ = 5.119 S/m; ε_r = 48.295; ρ = 1000 kg/m^3
Phantom section: Flat Section
Measurement Standard: DASY5 (IEEE/IEC/ANSI C63.19-2007)
DASY5 Configuration
Probe: EX3DV4 - SN3825; ConvF(4.38, 4.38, 4.38); Calibrated: 2013/12/13;
Sensor-Surface: 2mm (Mechanical Surface Detection)
Electronics: DAE4 Sn518; Calibrated: 2013/10/14
Phantom: ELI 4.0; Type: QDOVA001BB; Serial: 1045
Measurement SW: DASY52, Version 52.8 (7); SEMCAD X Version 14.6.10 (7331)

Area Scan (91x151x1): Interpolated grid: dx=1.000 mm, dy=1.000 mm
Maximum value of SAR (interpolated) = 1.92 W/kg

Zoom Scan (8x8x6)/Cube 0: Measurement grid: dx=4mm, dy=4mm, dz=2mm
Reference Value = 19.28 V/m; Power Drift = 0.00 dB
Peak SAR (extrapolated) = 3.37 W/kg
SAR(1 g) = 0.755 W/kg; SAR(10 g) = 0.224 W/kg
Maximum value of SAR (measured) = 1.66 W/kg

Date: 2014/07/24
Ambient Temp. : 24.0 degree.C. Liquid Temp.; 23.5 degree.C.

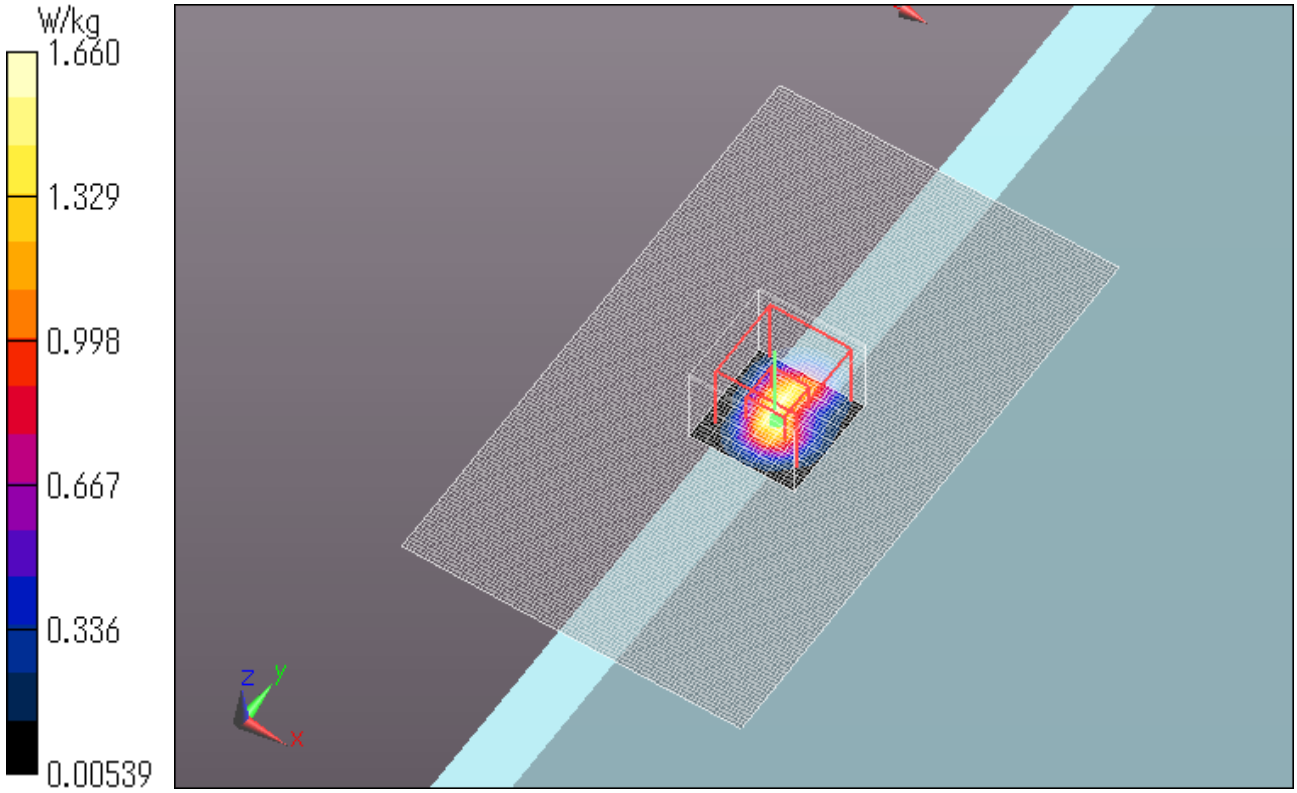

WLAN 11a 6Mbps Sub Ant Top 0mm 5240MHz
Communication System: UID 0, WLAN 11a/b/g/n (0); Communication System Band: 11a/n (W52 53); Frequency: 5240 MHz; Duty Cycle: 1:1
Medium parameters used: f = 5240 MHz; σ = 5.36 S/m; ε_r = 48.212; ρ = 1000 kg/m^3
Phantom section: Flat Section
Measurement Standard: DASY5 (IEEE/IEC/ANSI C63.19-2007)
DASY5 Configuration
Probe: EX3DV4 - SN3825; ConvF(4.38, 4.38, 4.38); Calibrated: 2013/12/13;
Sensor-Surface: 2mm (Mechanical Surface Detection)
Electronics: DAE4 Sn518; Calibrated: 2013/10/14
Phantom: ELI 4.0; Type: QDOVA001BB; Serial: 1045
Measurement SW: DASY52, Version 52.8 (7); SEMCAD X Version 14.6.10 (7164)

Area Scan (91x151x1): Interpolated grid: dx=1.000 mm, dy=1.000 mm
Maximum value of SAR (interpolated) = 1.86 W/kg

Zoom Scan (8x8x6)/Cube 0: Measurement grid: dx=4mm, dy=4mm, dz=2mm
Reference Value = 16.187 V/m; Power Drift = 0.11 dB
Peak SAR (extrapolated) = 3.10 W/kg
SAR(1 g) = 0.679 W/kg; SAR(10 g) = 0.201 W/kg
Maximum value of SAR (measured) = 1.47 W/kg

Date: 2014/07/24
Ambient Temp. : 24.0 degree.C. Liquid Temp.; 23.5 degree.C.

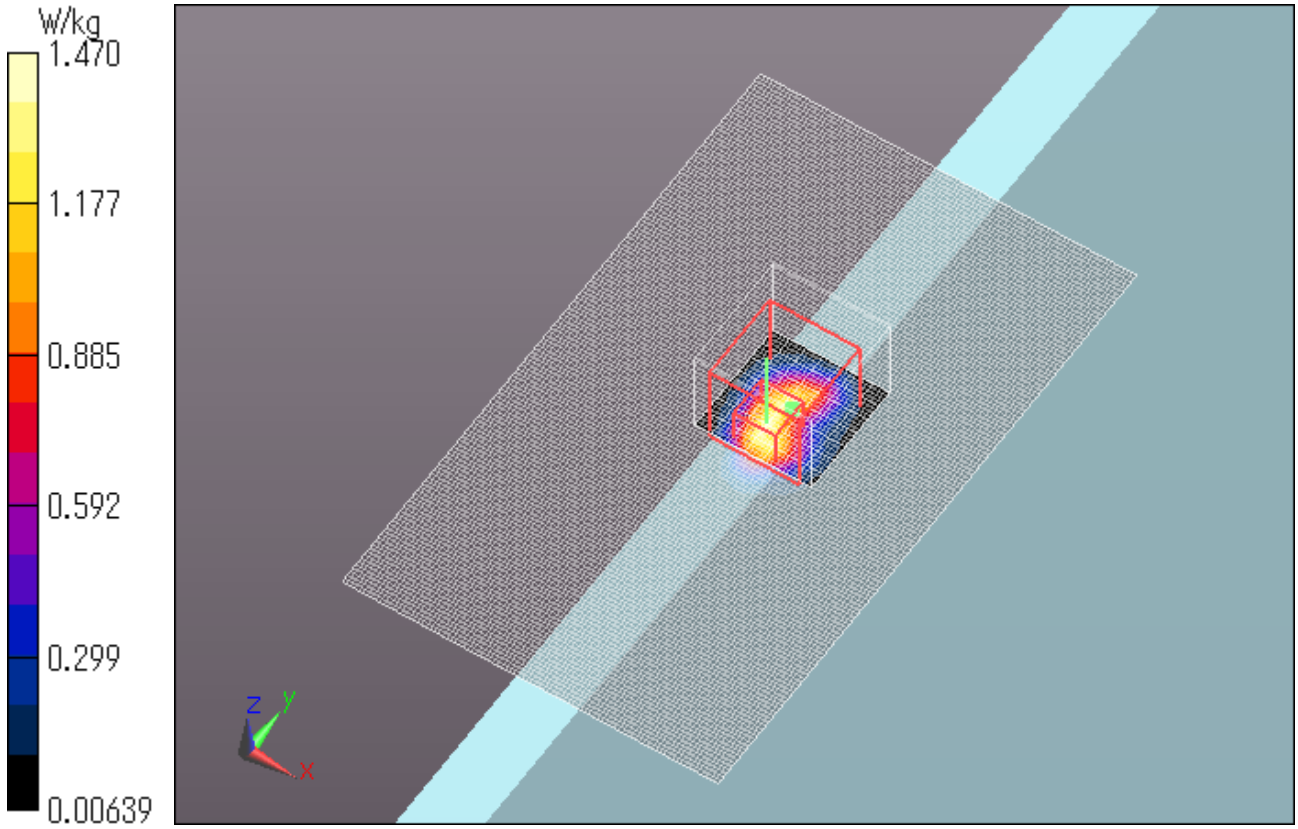

WLAN 11n20 MCS0 Sub Ant Top 0mm 5240MHz
Communication System: UID 0, WLAN 11a/b/g/n (0); Communication System Band: 11a/n (W52 53); Frequency: 5240 MHz; Duty Cycle: 1:1
Medium parameters used: f = 5240 MHz; σ = 5.36 S/m; ε_r = 48.212; ρ = 1000 kg/m^3
Phantom section: Flat Section
Measurement Standard: DASY5 (IEEE/IEC/ANSI C63.19-2007)
DASY5 Configuration
Probe: EX3DV4 - SN3825; ConvF(4.38, 4.38, 4.38); Calibrated: 2013/12/13;
Sensor-Surface: 2mm (Mechanical Surface Detection)
Electronics: DAE4 Sn518; Calibrated: 2013/10/14
Phantom: ELI 4.0; Type: QDOVA001BB; Serial: 1045
Measurement SW: DASY52, Version 52.8 (8); SEMCAD X Version 14.6.10 (7331)

Area Scan (91x151x1): Interpolated grid: dx=1.000 mm, dy=1.000 mm
Maximum value of SAR (interpolated) = 1.84 W/kg

Zoom Scan (8x8x6)/Cube 0: Measurement grid: dx=4mm, dy=4mm, dz=2mm
Reference Value = 16.47 V/m; Power Drift = 0.17 dB
Peak SAR (extrapolated) = 3.02 W/kg
SAR(1 g) = 0.642 W/kg; SAR(10 g) = 0.196 W/kg
Maximum value of SAR (measured) = 1.39 W/kg

Date: 2014/07/24
Ambient Temp. : 24.0 degree.C. Liquid Temp.; 23.5 degree.C.

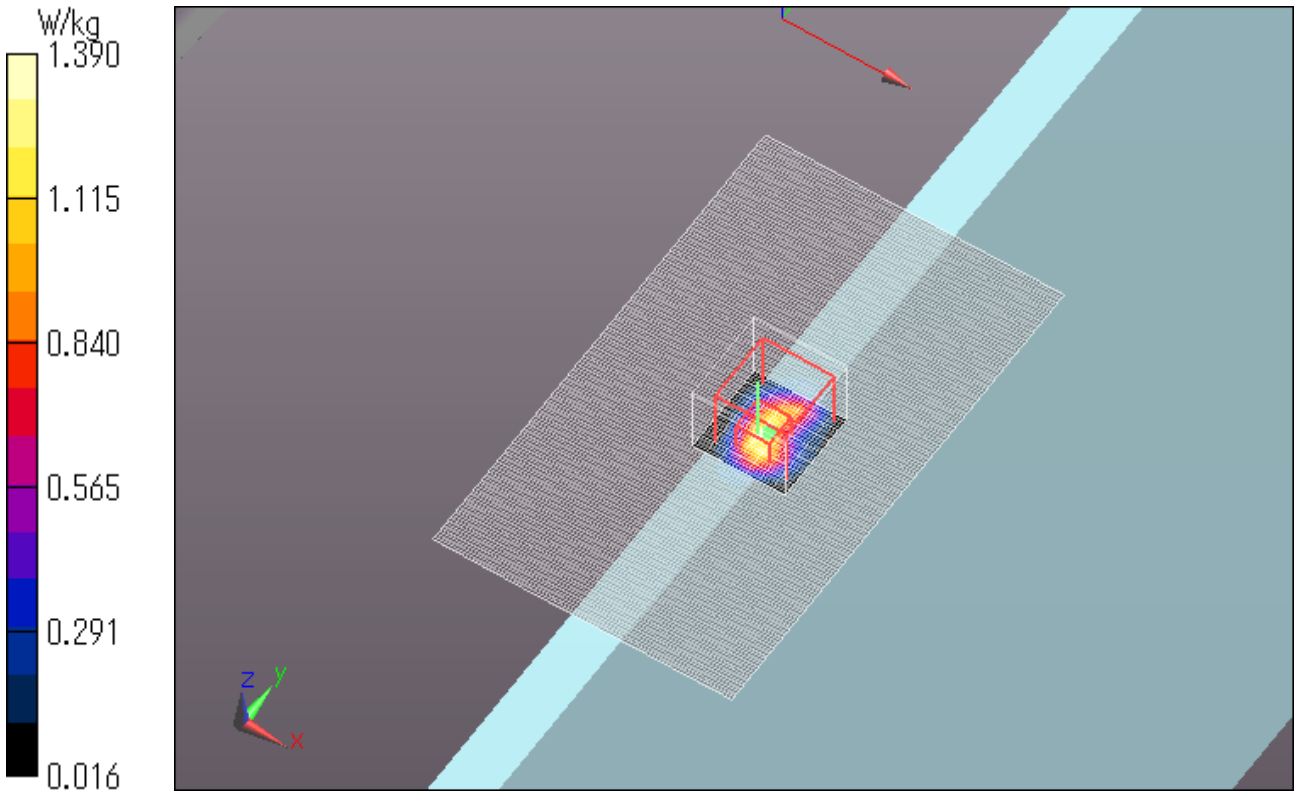

WLAN 11a 6Mbps Sub Ant Top 0mm 5180MHz - Repeat -
Communication System: UID 0, WLAN 11a/b/g/n (0); Communication System Band: 11a/n (W52 53); Frequency: 5180 MHz; Duty Cycle: 1:1
Medium parameters used: f = 5180 MHz; σ = 5.119 S/m; ε_r = 48.295; ρ = 1000 kg/m^3
Phantom section: Flat Section
Measurement Standard: DASY5 (IEEE/IEC/ANSI C63.19-2007)
DASY5 Configuration
Probe: EX3DV4 - SN3825; ConvF(4.38, 4.38, 4.38); Calibrated: 2013/12/13;
Sensor-Surface: 2mm (Mechanical Surface Detection)
Electronics: DAE4 Sn518; Calibrated: 2013/10/14
Phantom: ELI 4.0; Type: QDOVA001BB; Serial: 1045
Measurement SW: DASY52, Version 52.8 (7); SEMCAD X Version 14.6.10 (7164)

Area Scan (91x151x1): Interpolated grid: dx=1.000 mm, dy=1.000 mm
Maximum value of SAR (interpolated) = 1.99 W/kg

Zoom Scan (8x8x6)/Cube 0: Measurement grid: dx=4mm, dy=4mm, dz=2mm
Reference Value = 18.759 V/m; Power Drift = 0.06 dB
Peak SAR (extrapolated) = 3.40 W/kg
SAR(1 g) = 0.769 W/kg; SAR(10 g) = 0.225 W/kg
Maximum value of SAR (measured) = 1.63 W/kg

Date: 2014/07/24
Ambient Temp. : 24.0 degree.C. Liquid Temp.; 23.5 degree.C.

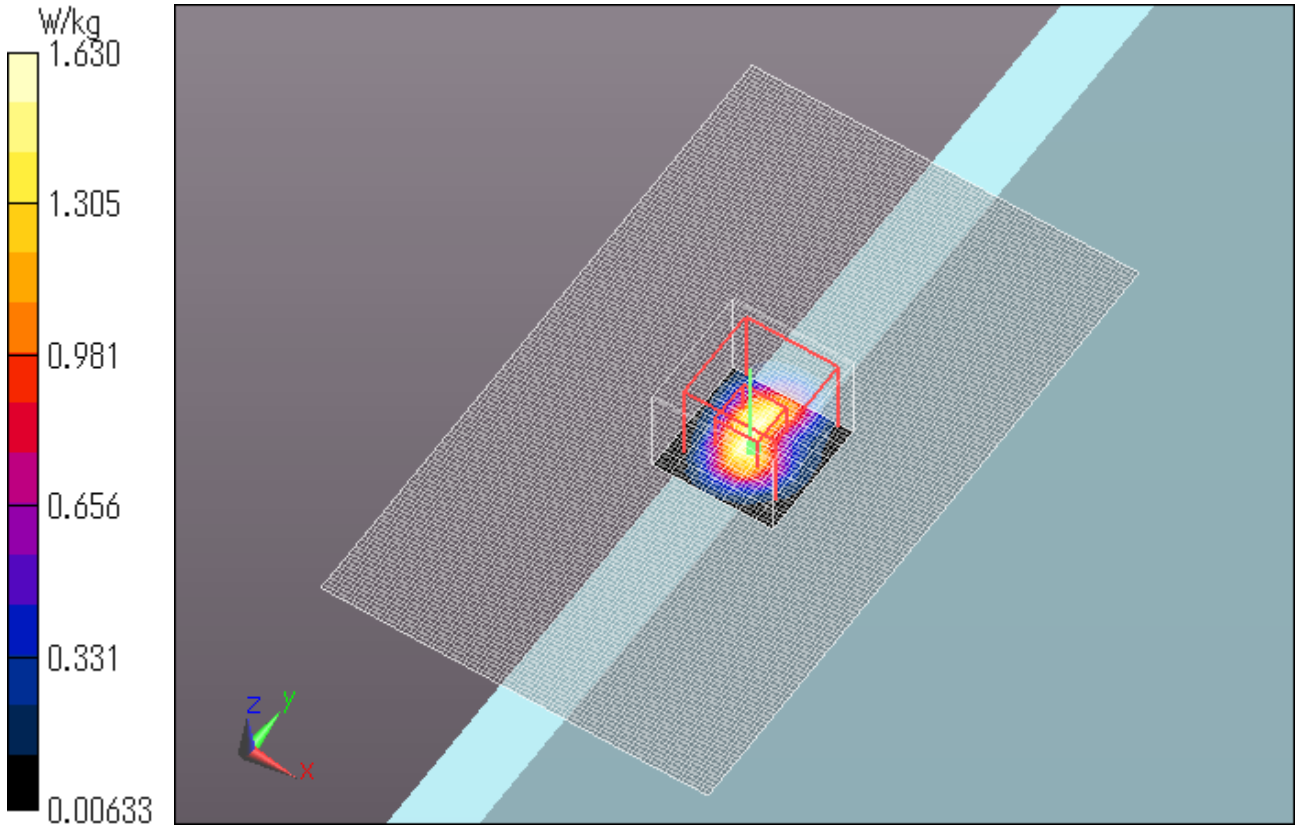

iii) WLAN Body 5.3GHz Band

WLAN 11a 6Mbps Main Ant Front 0mm 5320MHz
Communication System: UID 0, WLAN 11a/b/g/n (0); Communication System Band: 11a/n (W52 53); Frequency: 5320 MHz; Duty Cycle: 1:1
Medium parameters used: f = 5320 MHz; σ = 5.279 S/m; ε_r = 46.911; ρ = 1000 kg/m^3
Phantom section: Flat Section
Measurement Standard: DASY5 (IEEE/IEC/ANSI C63.19-2007)
DASY5 Configuration
Probe: EX3DV4 - SN3825; ConvF(4.23, 4.23, 4.23); Calibrated: 2013/12/13;
Sensor-Surface: 2mm (Mechanical Surface Detection)
Electronics: DAE4 Sn518; Calibrated: 2013/10/14
Phantom: ELI 4.0; Type: QDOVA001BB; Serial: 1045
Measurement SW: DASY52, Version 52.8 (7); SEMCAD X Version 14.6.10 (7164)

Area Scan (91x131x1): Interpolated grid: dx=1.000 mm, dy=1.000 mm
Maximum value of SAR (interpolated) = 0.614 W/kg

Zoom Scan (8x8x6)/Cube 0: Measurement grid: dx=4mm, dy=4mm, dz=2mm
Reference Value = 13.232 V/m; Power Drift = -0.12 dB
Peak SAR (extrapolated) = 1.54 W/kg
SAR(1 g) = 0.326 W/kg; SAR(10 g) = 0.098 W/kg
Maximum value of SAR (measured) = 0.685 W/kg

Date: 2014/07/25
Ambient Temp. : 24.0 degree.C. Liquid Temp.; 23.5 degree.C.

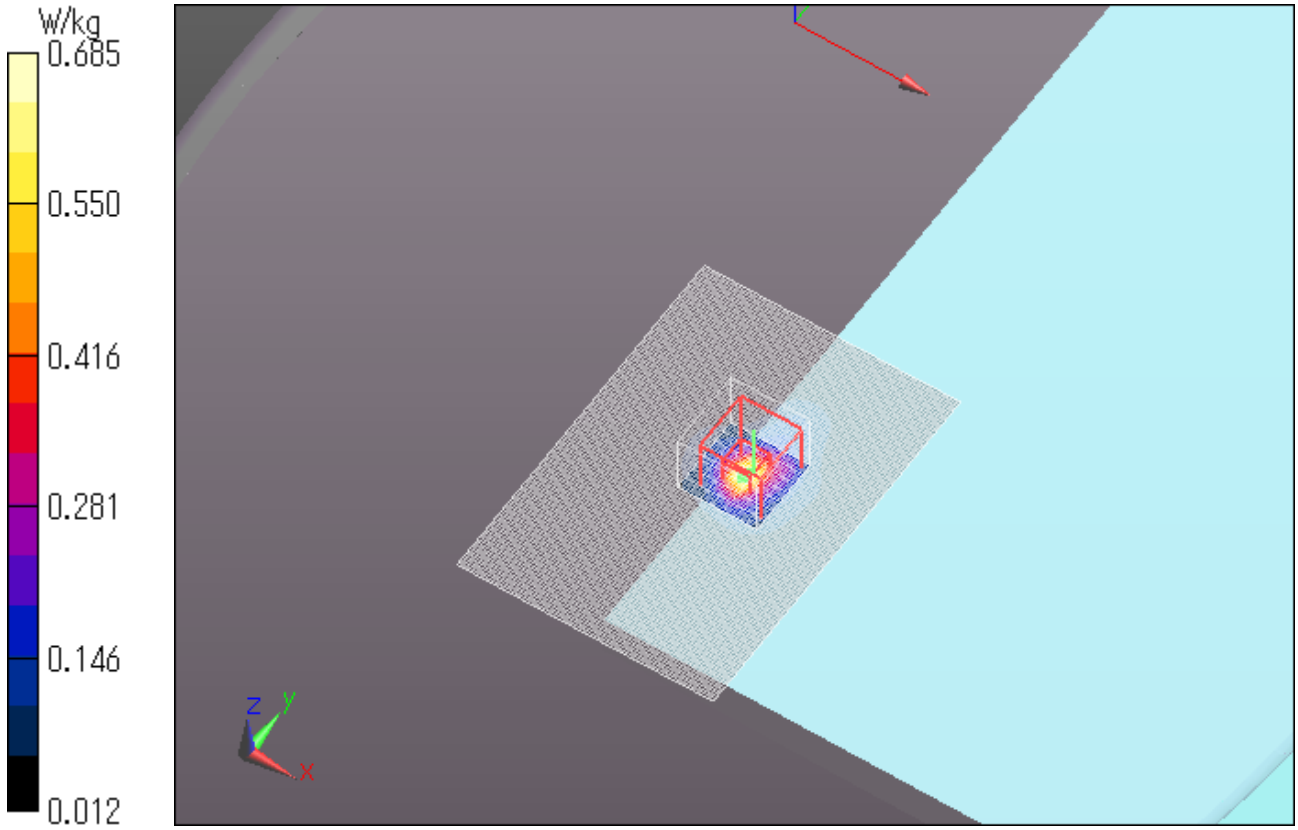

WLAN 11a 6Mbps Main Ant Rear 0mm 5320MHz
Communication System: UID 0, WLAN 11a/b/g/n (0); Communication System Band: 11a/n (W52 53); Frequency: 5320 MHz; Duty Cycle: 1:1
Medium parameters used: f = 5320 MHz; σ = 5.279 S/m; ε_r = 46.911; ρ = 1000 kg/m^3
Phantom section: Flat Section
Measurement Standard: DASY5 (IEEE/IEC/ANSI C63.19-2007)
DASY5 Configuration
Probe: EX3DV4 - SN3825; ConvF(4.23, 4.23, 4.23); Calibrated: 2013/12/13;
Sensor-Surface: 2mm (Mechanical Surface Detection)
Electronics: DAE4 Sn518; Calibrated: 2013/10/14
Phantom: ELI 4.0; Type: QDOVA001BB; Serial: 1045
Measurement SW: DASY52, Version 52.8 (7); SEMCAD X Version 14.6.10 (7164)

Area Scan (91x151x1): Interpolated grid: dx=1.000 mm, dy=1.000 mm
Maximum value of SAR (interpolated) = 0.288 W/kg

Zoom Scan (8x8x6)/Cube 0: Measurement grid: dx=4mm, dy=4mm, dz=2mm
Reference Value = 8.312 V/m; Power Drift = 0.19 dB
Peak SAR (extrapolated) = 0.578 W/kg
SAR(1 g) = 0.155 W/kg; SAR(10 g) = 0.062 W/kg
Maximum value of SAR (measured) = 0.288 W/kg

Date: 2014/07/25
Ambient Temp. : 24.0 degree.C. Liquid Temp.; 23.5 degree.C.

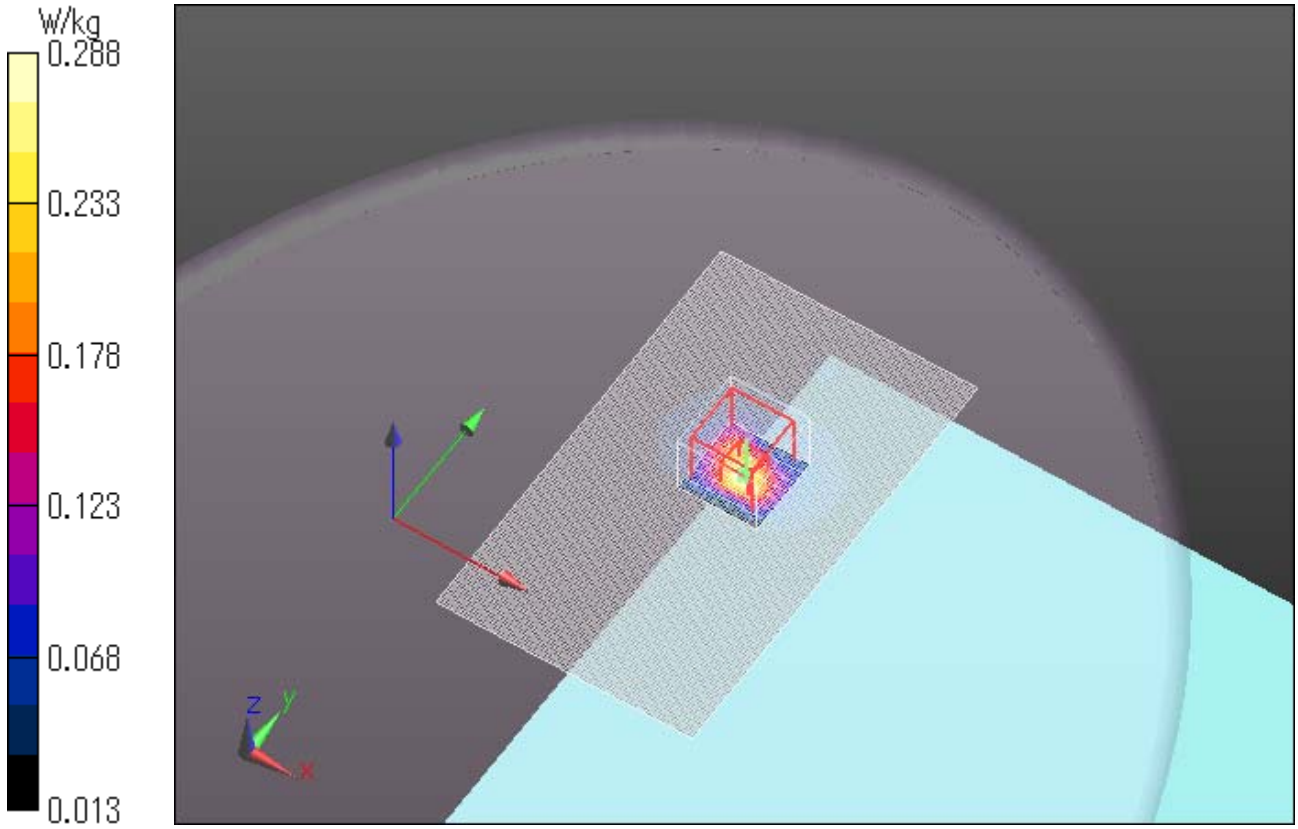

WLAN 11a 6Mbps Main Ant Bottom 0mm 5320MHz
Communication System: UID 0, WLAN 11a/b/g/n (0); Communication System Band: 11a/n (W52 53); Frequency: 5320 MHz; Duty Cycle: 1:1
Medium parameters used: f = 5320 MHz; σ = 5.279 S/m; ε_r = 46.911; ρ = 1000 kg/m^3
Phantom section: Flat Section
Measurement Standard: DASY5 (IEEE/IEC/ANSI C63.19-2007)
DASY5 Configuration
Probe: EX3DV4 - SN3825; ConvF(4.23, 4.23, 4.23); Calibrated: 2013/12/13;
Sensor-Surface: 2mm (Mechanical Surface Detection)
Electronics: DAE4 Sn518; Calibrated: 2013/10/14
Phantom: ELI 4.0; Type: QDOVA001BB; Serial: 1045
Measurement SW: DASY52, Version 52.8 (7); SEMCAD X Version 14.6.10 (7164)

Area Scan (91x151x1): Interpolated grid: dx=1.000 mm, dy=1.000 mm
Maximum value of SAR (interpolated) = 1.58 W/kg

Zoom Scan (8x8x6)/Cube 0: Measurement grid: dx=4mm, dy=4mm, dz=2mm
Reference Value = 20.046 V/m; Power Drift = 0.02 dB
Peak SAR (extrapolated) = 3.76 W/kg
SAR(1 g) = 0.744 W/kg; SAR(10 g) = 0.170 W/kg
Maximum value of SAR (measured) = 1.74 W/kg

Date: 2014/07/25
Ambient Temp. : 24.0 degree.C. Liquid Temp.; 23.5 degree.C.

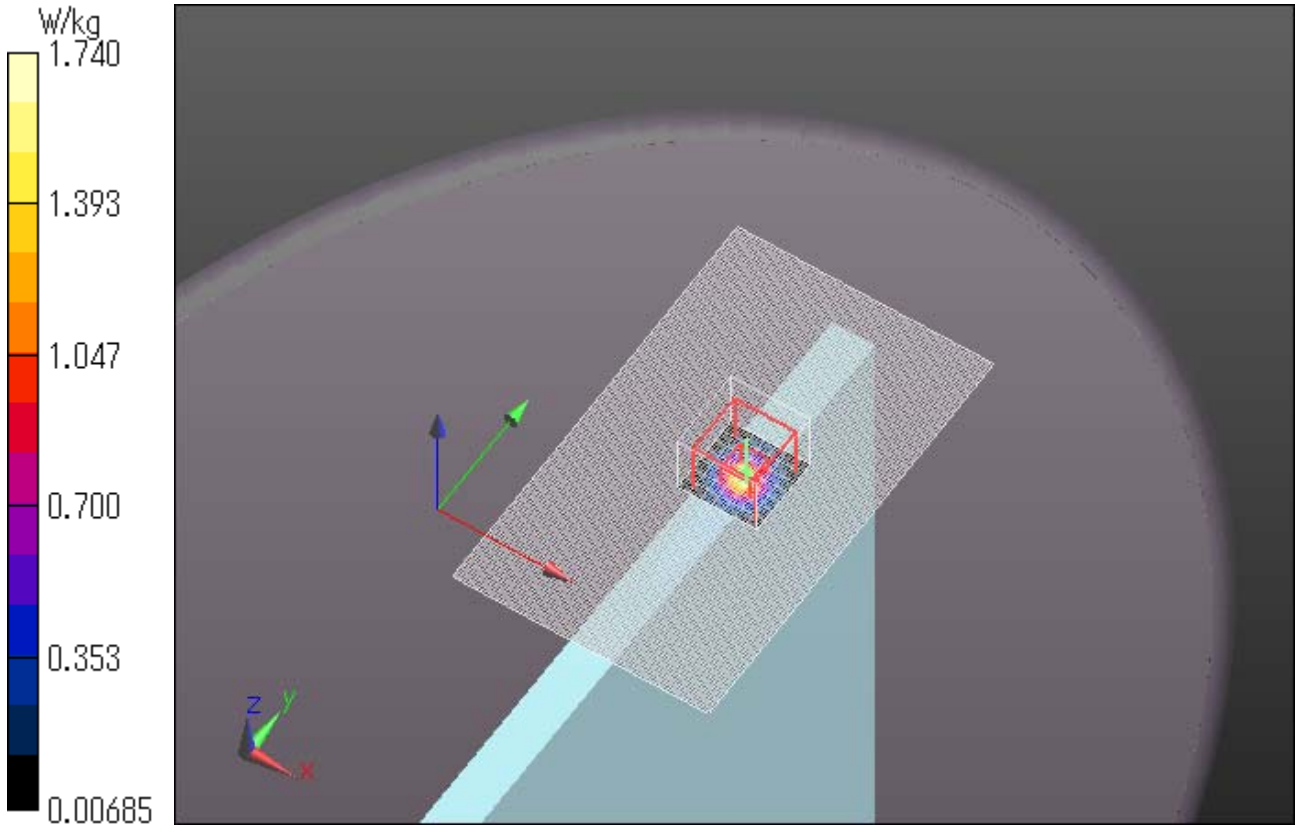

WLAN 11n20 MCS0 Main Ant Bottom 0mm 5320MHz
Communication System: UID 0, WLAN 11a/b/g/n (0); Communication System Band: 11a/n (W52 53); Frequency: 5320 MHz; Duty Cycle: 1:1
Medium parameters used: f = 5320 MHz; σ = 5.279 S/m; ε_r = 46.911; ρ = 1000 kg/m^3
Phantom section: Flat Section
Measurement Standard: DASY5 (IEEE/IEC/ANSI C63.19-2007)
DASY5 Configuration
Probe: EX3DV4 - SN3825; ConvF(4.23, 4.23, 4.23); Calibrated: 2013/12/13;
Sensor-Surface: 2mm (Mechanical Surface Detection)
Electronics: DAE4 Sn518; Calibrated: 2013/10/14
Phantom: ELI 4.0; Type: QDOVA001BB; Serial: 1045
Measurement SW: DASY52, Version 52.8 (8); SEMCAD X Version 14.6.10 (7331)

Area Scan (91x151x1): Interpolated grid: dx=1.000 mm, dy=1.000 mm
Maximum value of SAR (interpolated) = 1.84 W/kg

Zoom Scan (8x8x6)/Cube 0: Measurement grid: dx=4mm, dy=4mm, dz=2mm
Reference Value = 20.49 V/m; Power Drift = 0.08 dB
Peak SAR (extrapolated) = 3.95 W/kg
SAR(1 g) = 0.740 W/kg; SAR(10 g) = 0.171 W/kg
Maximum value of SAR (measured) = 1.64 W/kg

Date: 2014/07/25
Ambient Temp. : 24.0 degree.C. Liquid Temp.; 23.5 degree.C.

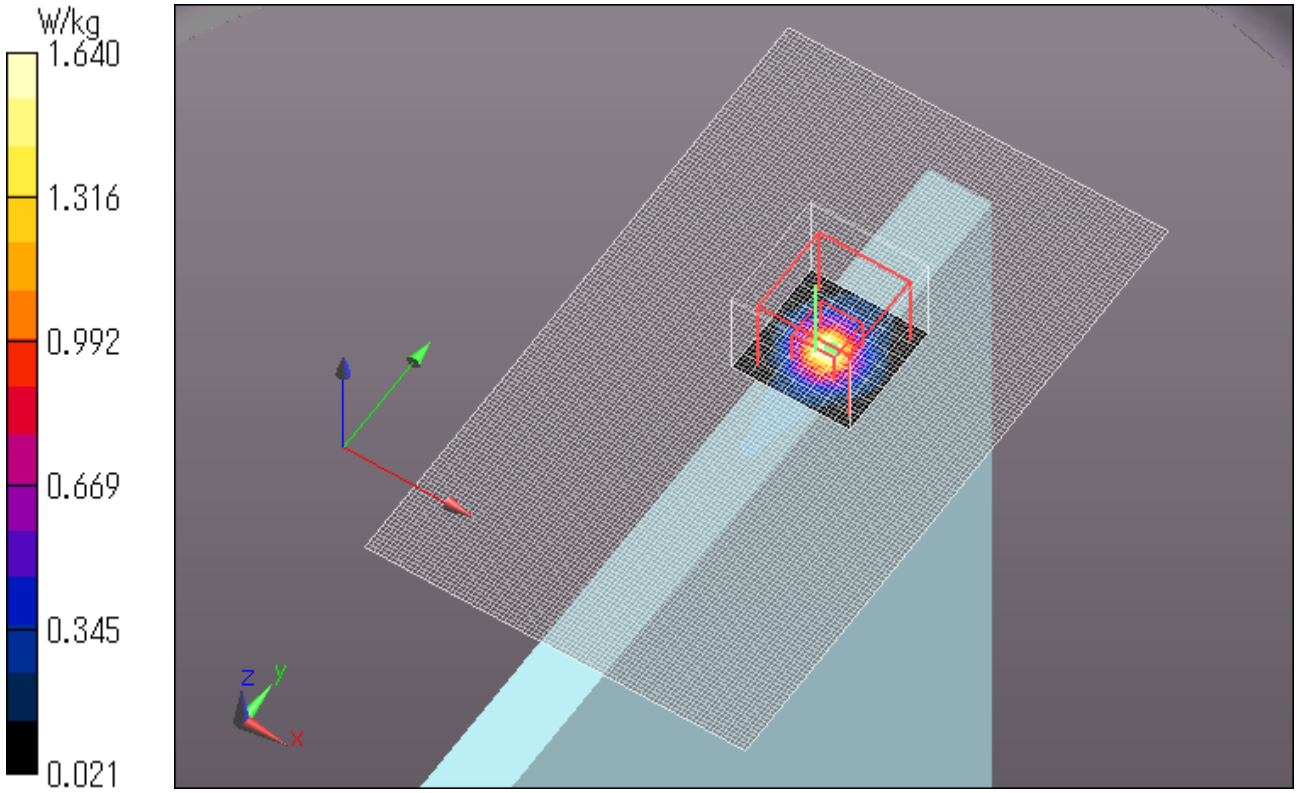

WLAN 11a 6Mbps Sub Ant Front 0mm 5320MHz
Communication System: UID 0, WLAN 11a/b/g/n (0); Communication System Band: 11a/n (W52 53); Frequency: 5320 MHz; Duty Cycle: 1:1
Medium parameters used: f = 5320 MHz; σ = 5.279 S/m; ε_r = 46.911; ρ = 1000 kg/m^3
Phantom section: Flat Section
Measurement Standard: DASY5 (IEEE/IEC/ANSI C63.19-2007)
DASY5 Configuration
Probe: EX3DV4 - SN3825; ConvF(4.23, 4.23, 4.23); Calibrated: 2013/12/13;
Sensor-Surface: 2mm (Mechanical Surface Detection)
Electronics: DAE4 Sn518; Calibrated: 2013/10/14
Phantom: ELI 4.0; Type: QDOVA001BB; Serial: 1045
Measurement SW: DASY52, Version 52.8 (7); SEMCAD X Version 14.6.10 (7164)

Area Scan (91x151x1): Interpolated grid: dx=1.000 mm, dy=1.000 mm
Maximum value of SAR (interpolated) = 0.632 W/kg

Zoom Scan (8x8x6)/Cube 0: Measurement grid: dx=4mm, dy=4mm, dz=2mm
Reference Value = 12.285 V/m; Power Drift = -0.11 dB
Peak SAR (extrapolated) = 1.25 W/kg
SAR(1 g) = 0.276 W/kg; SAR(10 g) = 0.081 W/kg
Maximum value of SAR (measured) = 0.596 W/kg

Date: 2014/07/25
Ambient Temp. : 24.0 degree.C. Liquid Temp.; 23.5 degree.C.

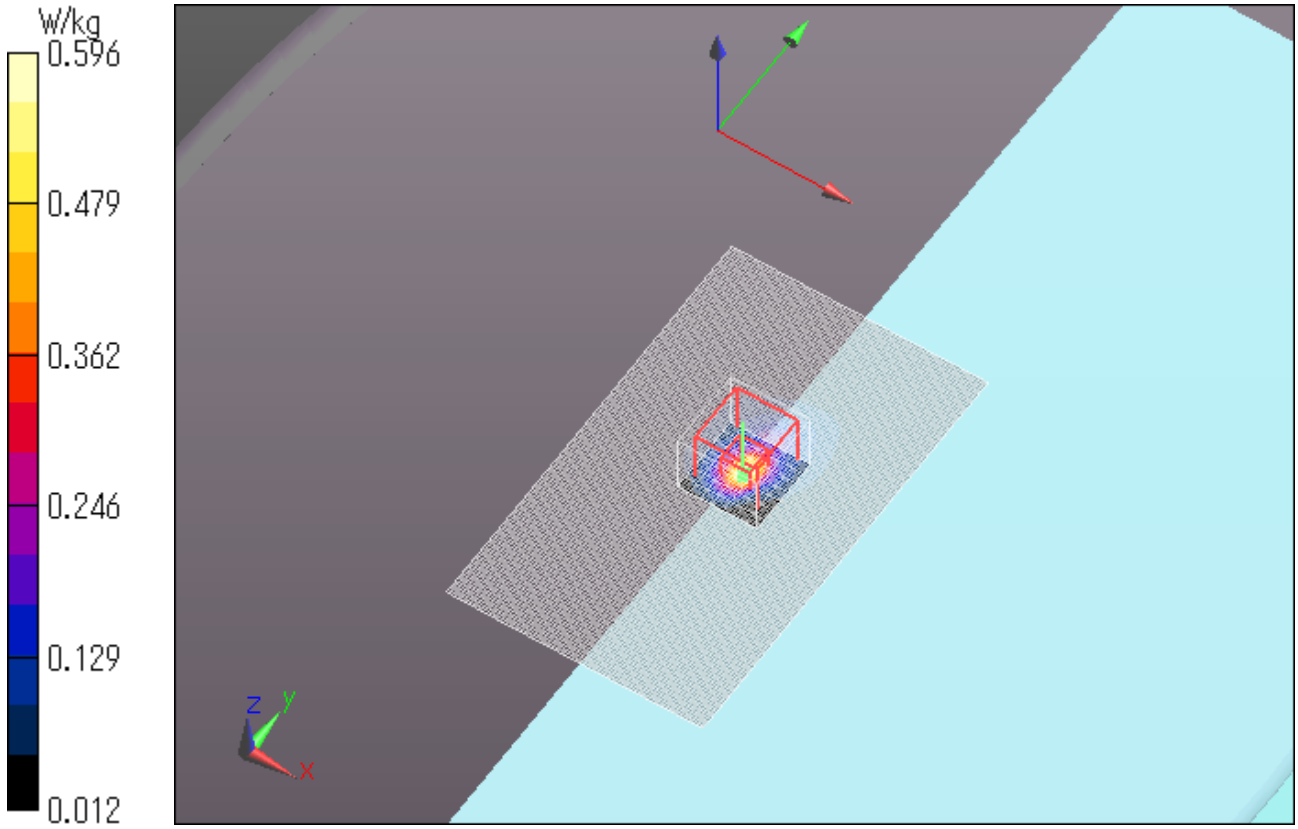

WLAN 11a 6Mbps Sub Ant Rear 0mm 5320MHz
Communication System: UID 0, WLAN 11a/b/g/n (0); Communication System Band: 11a/n (W52 53); Frequency: 5320 MHz; Duty Cycle: 1:1
Medium parameters used: f = 5320 MHz; σ = 5.279 S/m; ε_r = 46.911; ρ = 1000 kg/m^3
Phantom section: Flat Section
Measurement Standard: DASY5 (IEEE/IEC/ANSI C63.19-2007)
DASY5 Configuration
Probe: EX3DV4 - SN3825; ConvF(4.23, 4.23, 4.23); Calibrated: 2013/12/13;
Sensor-Surface: 2mm (Mechanical Surface Detection)
Electronics: DAE4 Sn518; Calibrated: 2013/10/14
Phantom: ELI 4.0; Type: QDOVA001BB; Serial: 1045
Measurement SW: DASY52, Version 52.8 (7); SEMCAD X Version 14.6.10 (7164)

Area Scan (91x151x1): Interpolated grid: dx=1.000 mm, dy=1.000 mm
Maximum value of SAR (interpolated) = 0.310 W/kg

Zoom Scan (8x8x6)/Cube 0: Measurement grid: dx=4mm, dy=4mm, dz=2mm
Reference Value = 9.013 V/m; Power Drift = 0.00 dB
Peak SAR (extrapolated) = 0.652 W/kg
SAR(1 g) = 0.168 W/kg; SAR(10 g) = 0.068 W/kg
Maximum value of SAR (measured) = 0.337 W/kg

Date: 2014/07/25
Ambient Temp. : 24.0 degree.C. Liquid Temp.; 23.5 degree.C.

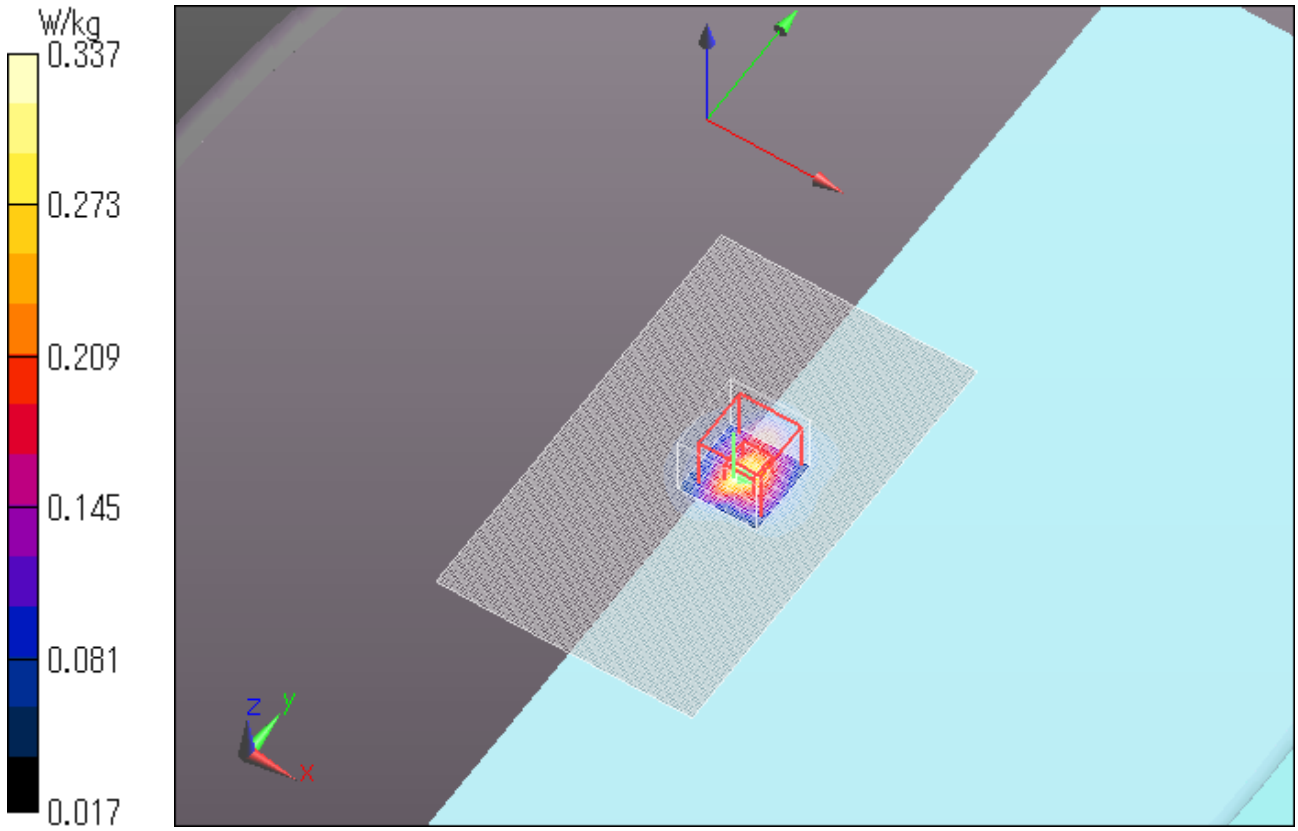

WLAN 11a 6Mbps Sub Ant Top 0mm 5320MHz
Communication System: UID 0, WLAN 11a/b/g/n (0); Communication System Band: 11a/n (W52 53); Frequency: 5320 MHz; Duty Cycle: 1:1
Medium parameters used: f = 5320 MHz; σ = 5.279 S/m; ε_r = 46.911; ρ = 1000 kg/m^3
Phantom section: Flat Section
Measurement Standard: DASY5 (IEEE/IEC/ANSI C63.19-2007)
DASY5 Configuration
Probe: EX3DV4 - SN3825; ConvF(4.23, 4.23, 4.23); Calibrated: 2013/12/13;
Sensor-Surface: 2mm (Mechanical Surface Detection)
Electronics: DAE4 Sn518; Calibrated: 2013/10/14
Phantom: ELI 4.0; Type: QDOVA001BB; Serial: 1045
Measurement SW: DASY52, Version 52.8 (7); SEMCAD X Version 14.6.10 (7164)

Area Scan (91x151x1): Interpolated grid: dx=1.000 mm, dy=1.000 mm
Maximum value of SAR (interpolated) = 2.31 W/kg

Zoom Scan (8x8x6)/Cube 0: Measurement grid: dx=4mm, dy=4mm, dz=2mm
Reference Value = 17.529 V/m; Power Drift = 0.13 dB
Peak SAR (extrapolated) = 3.33 W/kg
SAR(1 g) = 0.698 W/kg; SAR(10 g) = 0.213 W/kg
Maximum value of SAR (measured) = 1.53 W/kg

Date: 2014/07/25
Ambient Temp. : 24.0 degree.C. Liquid Temp.; 23.5 degree.C.

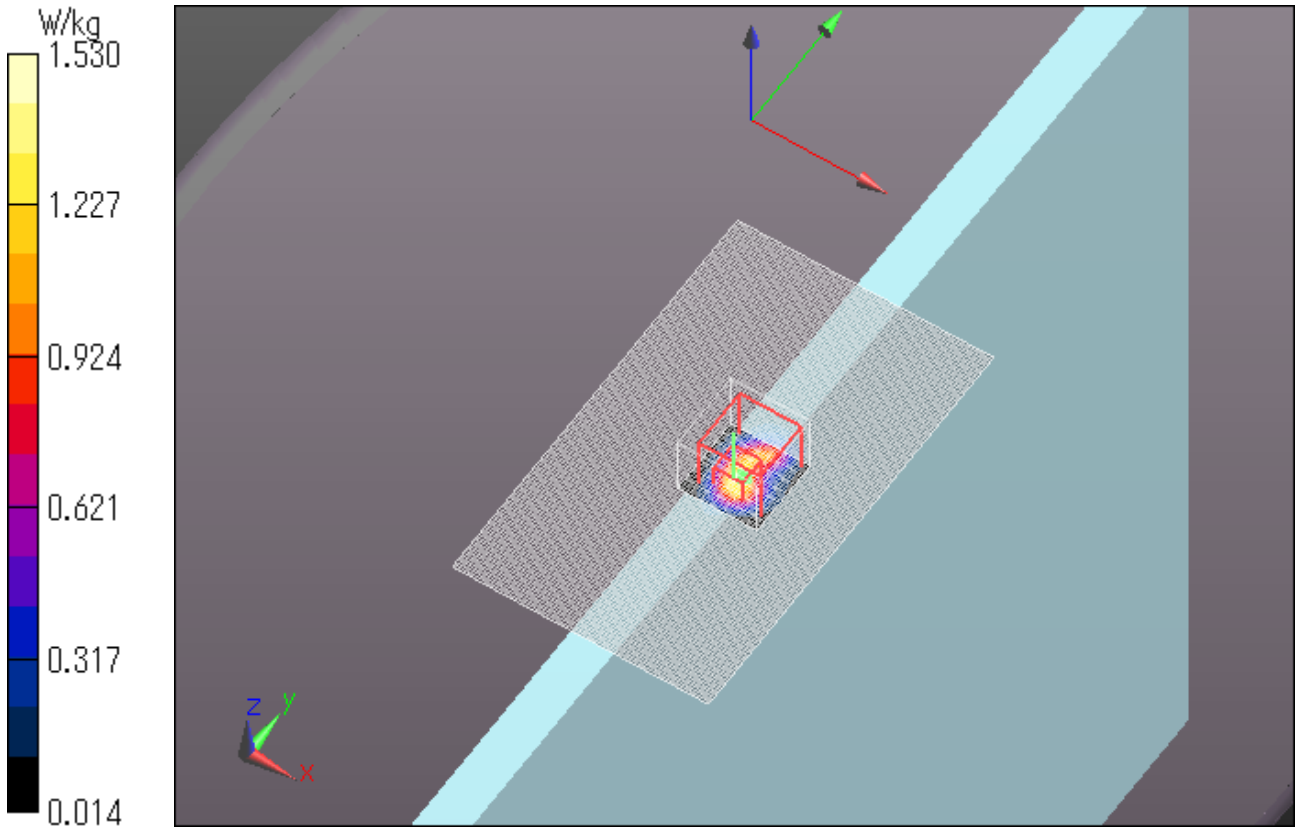

WLAN 11n20 MCS0 Sub Ant Top 0mm 5320MHz
Communication System: UID 0, WLAN 11a/b/g/n (0); Communication System Band: 11a/n (W52 53); Frequency: 5320 MHz; Duty Cycle: 1:1
Medium parameters used: f = 5320 MHz; σ = 5.279 S/m; ε_r = 46.911; ρ = 1000 kg/m^3
Phantom section: Flat Section
Measurement Standard: DASY5 (IEEE/IEC/ANSI C63.19-2007)
DASY5 Configuration
Probe: EX3DV4 - SN3825; ConvF(4.23, 4.23, 4.23); Calibrated: 2013/12/13;
Sensor-Surface: 2mm (Mechanical Surface Detection)
Electronics: DAE4 Sn518; Calibrated: 2013/10/14
Phantom: ELI 4.0; Type: QDOVA001BB; Serial: 1045
Measurement SW: DASY52, Version 52.8 (8); SEMCAD X Version 14.6.10 (7331)

Area Scan (91x151x1): Interpolated grid: dx=1.000 mm, dy=1.000 mm
Maximum value of SAR (interpolated) = 1.80 W/kg

Zoom Scan (8x8x6)/Cube 0: Measurement grid: dx=4mm, dy=4mm, dz=2mm
Reference Value = 17.08 V/m; Power Drift = 0.04 dB
Peak SAR (extrapolated) = 2.98 W/kg
SAR(1 g) = 0.622 W/kg; SAR(10 g) = 0.192 W/kg
Maximum value of SAR (measured) = 1.37 W/kg

Date: 2014/07/25
Ambient Temp. : 24.0 degree.C. Liquid Temp.; 23.5 degree.C.

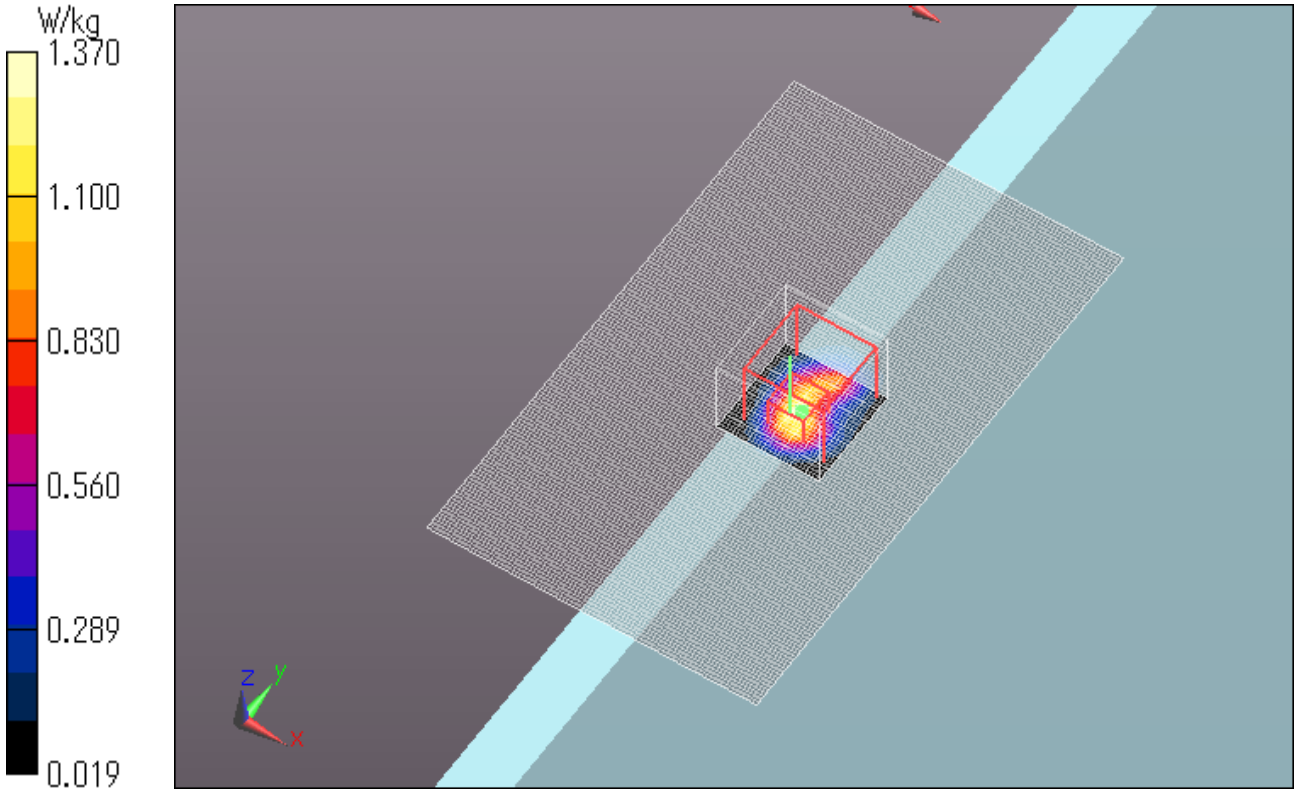

WLAN 11a 6Mbps Sub Ant Top 0mm 5280MHz
Communication System: UID 0, WLAN 11a/b/g/n (0); Communication System Band: 11a/n (W52 53); Frequency: 5280 MHz; Duty Cycle: 1:1
Medium parameters used: f = 5280 MHz; σ = 5.229 S/m; ε_r = 47.705; ρ = 1000 kg/m^3
Phantom section: Flat Section
Measurement Standard: DASY5 (IEEE/IEC/ANSI C63.19-2007)
DASY5 Configuration
Probe: EX3DV4 - SN3825; ConvF(4.23, 4.23, 4.23); Calibrated: 2013/12/13;
Sensor-Surface: 2mm (Mechanical Surface Detection)
Electronics: DAE4 Sn518; Calibrated: 2013/10/14
Phantom: ELI 4.0; Type: QDOVA001BB; Serial: 1045
Measurement SW: DASY52, Version 52.8 (7); SEMCAD X Version 14.6.10 (7164)

Area Scan (91x151x1): Interpolated grid: dx=1.000 mm, dy=1.000 mm
Maximum value of SAR (interpolated) = 1.52 W/kg

Zoom Scan (8x8x6)/Cube 0: Measurement grid: dx=4mm, dy=4mm, dz=2mm
Reference Value = 16.322 V/m; Power Drift = 0.07 dB
Peak SAR (extrapolated) = 2.51 W/kg
SAR(1 g) = 0.542 W/kg; SAR(10 g) = 0.155 W/kg
Maximum value of SAR (measured) = 1.13 W/kg

Date: 2014/07/25
Ambient Temp. : 24.0 degree.C. Liquid Temp.; 23.5 degree.C.

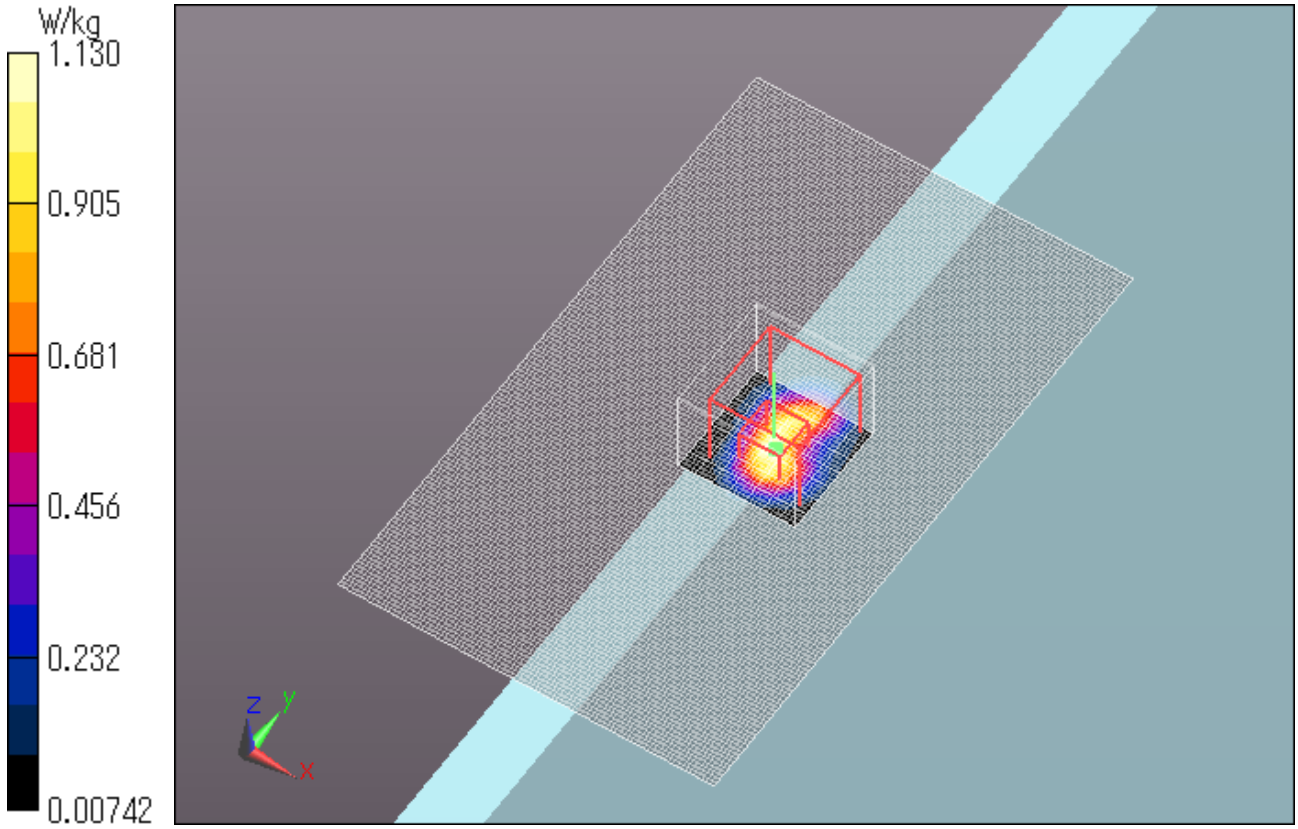

iv) WLAN Body 5.6GHz Band

WLAN 11a 6Mbps Main Ant Front 0mm 5500MHz
Communication System: UID 0, WLAN 11a/b/g/n (0); Communication System Band: 11a/n (W56); Frequency: 5500 MHz; Duty Cycle: 1:1
Medium parameters used: f = 5500 MHz; σ = 5.607 S/m; ε_r = 47.668; ρ = 1000 kg/m^3
Phantom section: Flat Section
Measurement Standard: DASY5 (IEEE/IEC/ANSI C63.19-2007)
DASY5 Configuration
Probe: EX3DV4 - SN3825; ConvF(3.92, 3.92, 3.92); Calibrated: 2013/12/13;
Sensor-Surface: 2mm (Mechanical Surface Detection)
Electronics: DAE4 Sn518; Calibrated: 2013/10/14
Phantom: ELI 4.0; Type: QDOVA001BB; Serial: 1045
Measurement SW: DASY52, Version 52.8 (7); SEMCAD X Version 14.6.10 (7164)

Area Scan (91x131x1): Interpolated grid: dx=1.000 mm, dy=1.000 mm
Maximum value of SAR (interpolated) = 0.599 W/kg

Zoom Scan (8x8x6)/Cube 0: Measurement grid: dx=4mm, dy=4mm, dz=2mm
Reference Value = 12.332 V/m; Power Drift = -0.09 dB
Peak SAR (extrapolated) = 1.24 W/kg

SAR(1 g) = 0.312 W/kg; SAR(10 g) = 0.112 W/kg
Maximum value of SAR (measured) = 0.651 W/kg

Date: 2014/07/27
Ambient Temp. : 24.0 degree.C. Liquid Temp.: 23.5 degree.C.

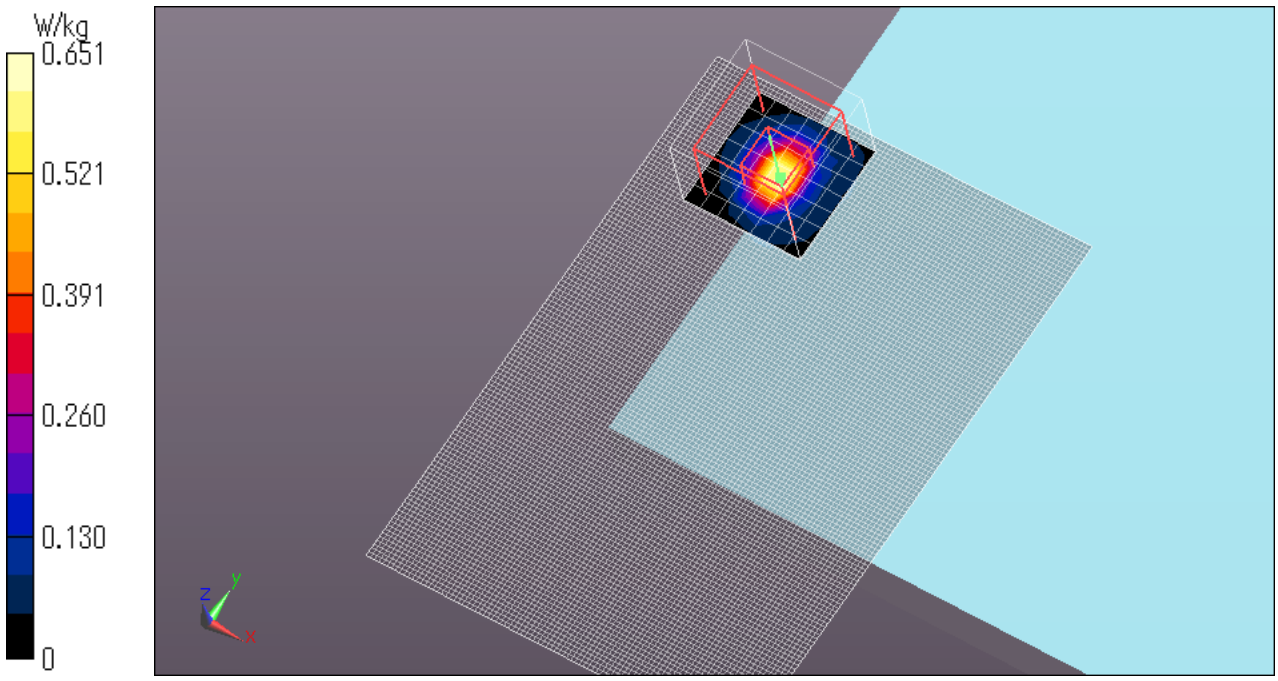

WLAN 11a 6Mbps Main Ant Rear 0mm 5500MHz
Communication System: UID 0, WLAN 11a/b/g/n (0); Communication System Band: 11a/n (W56); Frequency: 5500 MHz; Duty Cycle: 1:1
Medium parameters used: f = 5500 MHz; σ = 5.607 S/m; ε_r = 47.668; ρ = 1000 kg/m^3
Phantom section: Flat Section
Measurement Standard: DASY5 (IEEE/IEC/ANSI C63.19-2007)
DASY5 Configuration
Probe: EX3DV4 - SN3825; ConvF(3.92, 3.92, 3.92); Calibrated: 2013/12/13;
Sensor-Surface: 2mm (Mechanical Surface Detection)
Electronics: DAE4 Sn518; Calibrated: 2013/10/14
Phantom: ELI 4.0; Type: QDOVA001BB; Serial: 1045
Measurement SW: DASY52, Version 52.8 (7); SEMCAD X Version 14.6.10 (7164)

Area Scan (91x151x1): Interpolated grid: dx=1.000 mm, dy=1.000 mm
Maximum value of SAR (interpolated) = 0.336 W/kg

Zoom Scan (8x8x6)/Cube 0: Measurement grid: dx=4mm, dy=4mm, dz=2mm
Reference Value = 7.081 V/m; Power Drift = -0.08 dB
Peak SAR (extrapolated) = 0.407 W/kg
SAR(1 g) = 0.105 W/kg; SAR(10 g) = 0.032 W/kg
Maximum value of SAR (measured) = 0.212 W/kg

Date: 2014/07/27
Ambient Temp. : 24.0 degree.C. Liquid Temp.; 23.5 degree.C.

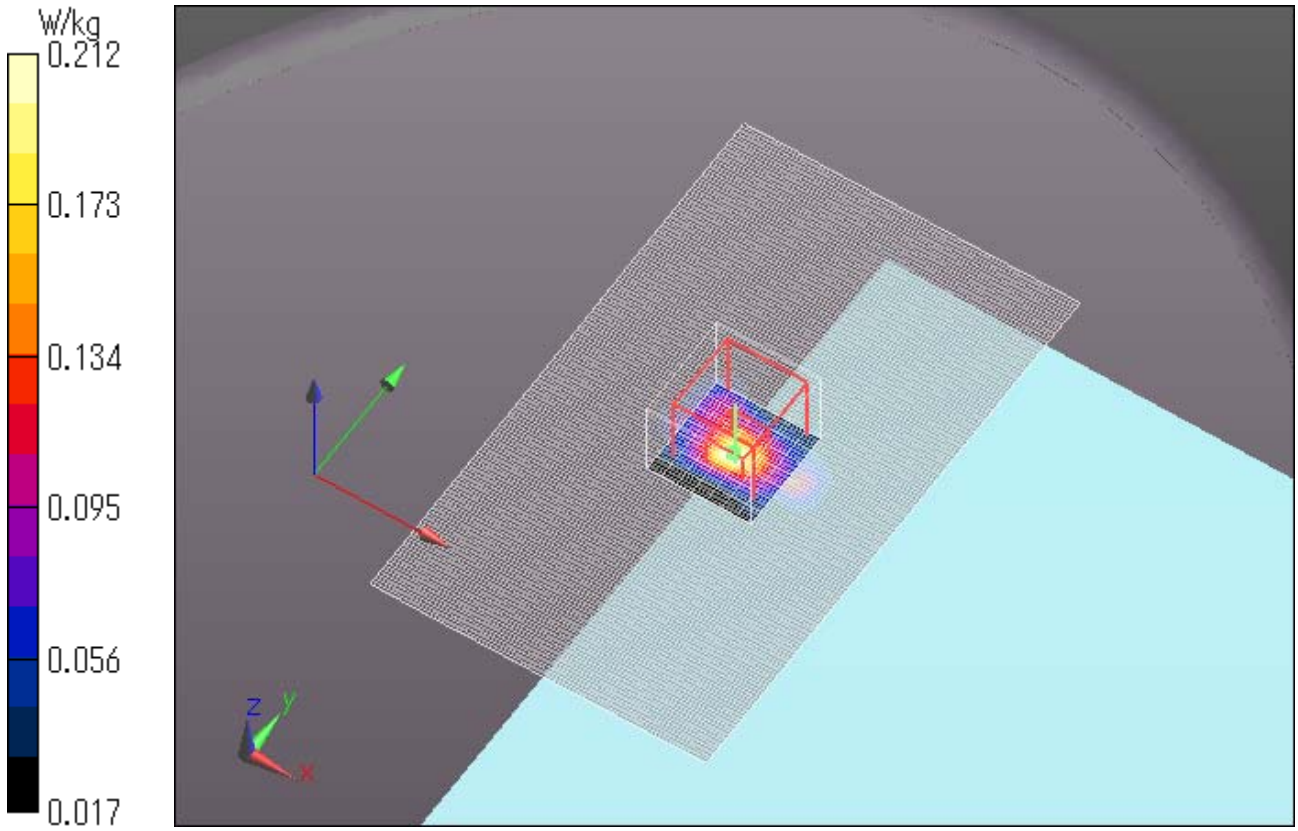

WLAN 11a 6Mbps Main Ant Bottom 0mm 5500MHz
Communication System: UID 0, WLAN 11a/b/g/n (0); Communication System Band: 11a/n (W56); Frequency: 5500 MHz; Duty Cycle: 1:1
Medium parameters used: f = 5500 MHz; σ = 5.607 S/m; ε_r = 47.668; ρ = 1000 kg/m^3
Phantom section: Flat Section
Measurement Standard: DASY5 (IEEE/IEC/ANSI C63.19-2007)
DASY5 Configuration
Probe: EX3DV4 - SN3922; ConvF(3.89, 3.89, 3.89); Calibrated: 2014/06/13;
Sensor-Surface: 2mm (Mechanical Surface Detection)
Electronics: DAE4 Sn1372; Calibrated: 2014/06/18
Phantom: ELI 4.0; Type: QDOVA001BB; Serial: 1045
Measurement SW: DASY52, Version 52.8 (7); SEMCAD X Version 14.6.10 (7164)

Area Scan (91x151x1): Interpolated grid: dx=1.000 mm, dy=1.000 mm
Maximum value of SAR (interpolated) = 1.41 W/kg

Zoom Scan (8x8x6)/Cube 0: Measurement grid: dx=4mm, dy=4mm, dz=2mm
Reference Value = 16.715 V/m; Power Drift = 0.14 dB
Peak SAR (extrapolated) = 6.15 W/kg
SAR(1 g) = 0.498 W/kg; SAR(10 g) = 0.102 W/kg
Maximum value of SAR (measured) = 1.27 W/kg

Date: 2014/07/27
Ambient Temp. : 24.0 degree.C. Liquid Temp.; 23.5 degree.C.

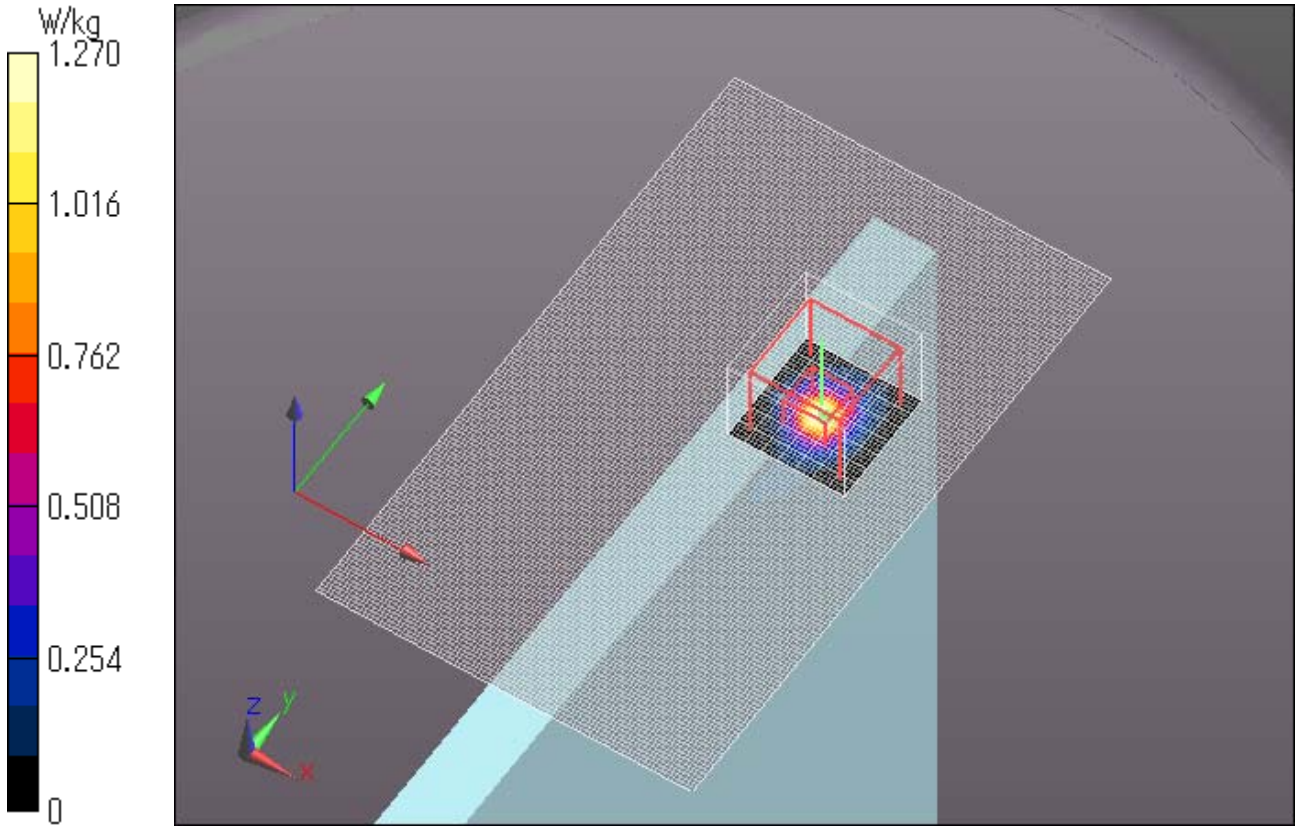

WLAN 11n20 MCS0 Main Ant Bottom 0mm 5500MHz
Communication System: UID 0, WLAN 11a/b/g/n (0); Communication System Band: 11a/n (W56); Frequency: 5500 MHz; Duty Cycle: 1:1
Medium parameters used: f = 5500 MHz; σ = 5.607 S/m; ε_r = 47.668; ρ = 1000 kg/m^3
Phantom section: Flat Section
Measurement Standard: DASY5 (IEEE/IEC/ANSI C63.19-2007)
DASY5 Configuration
Probe: EX3DV4 - SN3922; ConvF(3.89, 3.89, 3.89); Calibrated: 2014/06/13;
Sensor-Surface: 2mm (Mechanical Surface Detection)
Electronics: DAE4 Sn1372; Calibrated: 2014/06/18
Phantom: ELI 4.0; Type: QDOVA001BB; Serial: 1045
Measurement SW: DASY52, Version 52.8 (7); SEMCAD X Version 14.6.10 (7164)

Area Scan (91x151x1): Interpolated grid: dx=1.000 mm, dy=1.000 mm
Maximum value of SAR (interpolated) = 1.51 W/kg

Zoom Scan (8x8x6)/Cube 0: Measurement grid: dx=4mm, dy=4mm, dz=2mm
Reference Value = 17.565 V/m; Power Drift = -0.00 dB
Peak SAR (extrapolated) = 3.66 W/kg
SAR(1 g) = 0.552 W/kg; SAR(10 g) = 0.112 W/kg
Maximum value of SAR (measured) = 1.47 W/kg

Date: 2014/07/27
Ambient Temp. : 24.0 degree.C. Liquid Temp.; 23.5 degree.C.

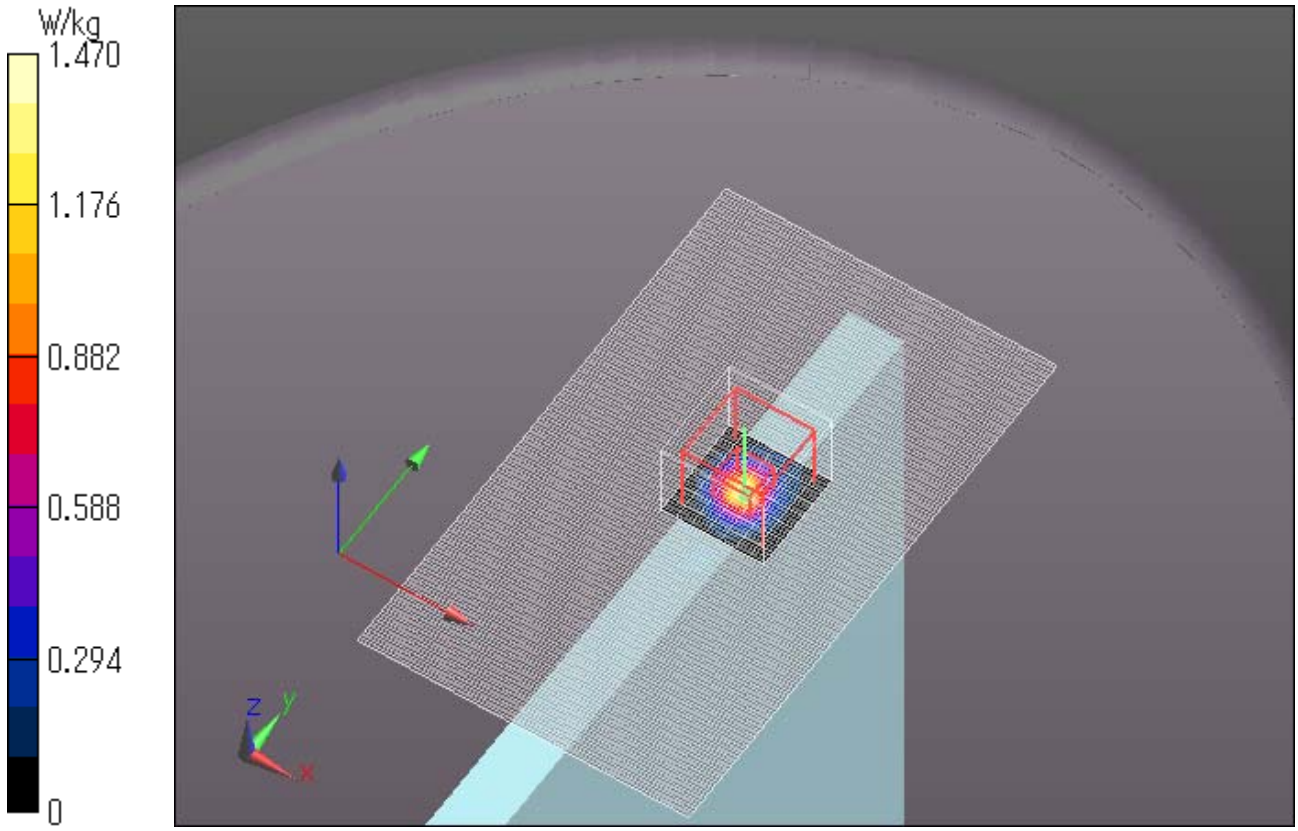

WLAN 11a 6Mbps Main Ant Bottom 0mm 5560MHz
Communication System: UID 0, WLAN 11a/b/g/n (0); Communication System Band: 11a/n (W56); Frequency: 5560 MHz; Duty Cycle: 1:1
Medium parameters used: f = 5560 MHz; σ = 5.741 S/m; ε_r = 47.461; ρ = 1000 kg/m^3
Phantom section: Flat Section
Measurement Standard: DASY5 (IEEE/IEC/ANSI C63.19-2007)
DASY5 Configuration
Probe: EX3DV4 - SN3922; ConvF(3.85, 3.85, 3.85); Calibrated: 2014/06/13;
Sensor-Surface: 2mm (Mechanical Surface Detection)
Electronics: DAE4 Sn1372; Calibrated: 2014/06/18
Phantom: ELI 4.0; Type: QDOVA001BB; Serial: 1045
Measurement SW: DASY52, Version 52.8 (8); SEMCAD X Version 14.6.10 (7331)

Area Scan (91x151x1): Interpolated grid: dx=1.000 mm, dy=1.000 mm
Maximum value of SAR (interpolated) = 0.873 W/kg

Zoom Scan (8x8x6)/Cube 0: Measurement grid: dx=4mm, dy=4mm, dz=2mm
Reference Value = 17.62 V/m; Power Drift = -0.01 dB
Peak SAR (extrapolated) = 2.84 W/kg
SAR(1 g) = 0.571 W/kg; SAR(10 g) = 0.115 W/kg
Maximum value of SAR (measured) = 1.55 W/kg

Date: 2014/07/27
Ambient Temp. : 24.0 degree.C. Liquid Temp.; 23.5 degree.C.

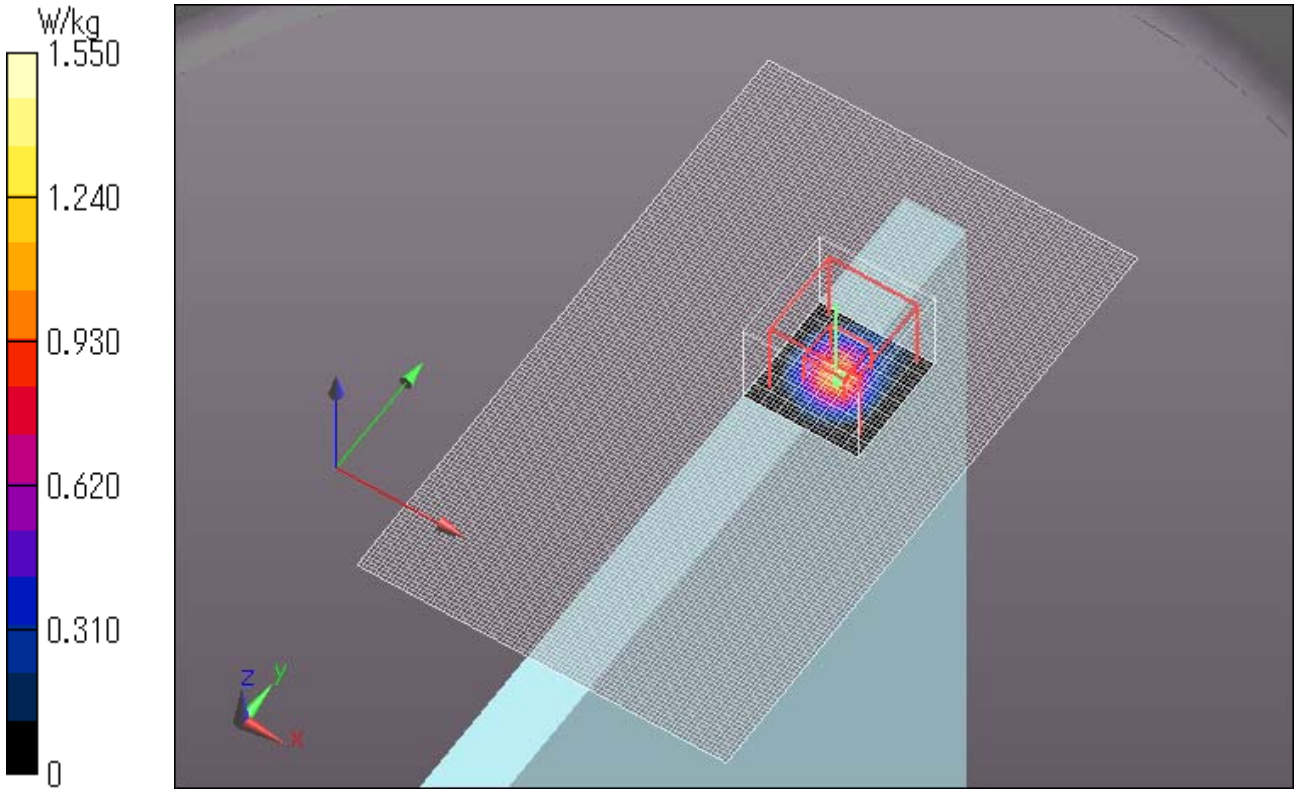

WLAN 11a 6Mbps Main Ant Bottom 0mm 5640MHz
Communication System: UID 0, WLAN 11a/b/g/n (0); Communication System Band: 11a/n (W56); Frequency: 5640 MHz; Duty Cycle: 1:1
Medium parameters used: f = 5640 MHz; σ = 5.855 S/m; ε_r = 46.858; ρ = 1000 kg/m^3
Phantom section: Flat Section
Measurement Standard: DASY5 (IEEE/IEC/ANSI C63.19-2007)
DASY5 Configuration
Probe: EX3DV4 - SN3922; ConvF(3.85, 3.85, 3.85); Calibrated: 2014/06/13;
Sensor-Surface: 2mm (Mechanical Surface Detection)
Electronics: DAE4 Sn1372; Calibrated: 2014/06/18
Phantom: ELI 4.0; Type: QDOVA001BB; Serial: 1045
Measurement SW: DASY52, Version 52.8 (8); SEMCAD X Version 14.6.10 (7331)

Area Scan (91x151x1): Interpolated grid: dx=1.000 mm, dy=1.000 mm
Maximum value of SAR (interpolated) = 1.56 W/kg

Zoom Scan (8x8x6)/Cube 0: Measurement grid: dx=4mm, dy=4mm, dz=2mm
Reference Value = 18.72 V/m; Power Drift = -0.03 dB
Peak SAR (extrapolated) = 3.45 W/kg
SAR(1 g) = 0.651 W/kg; SAR(10 g) = 0.135 W/kg
Maximum value of SAR (measured) = 1.65 W/kg

Date: 2014/07/27
Ambient Temp. : 24.0 degree.C. Liquid Temp.; 23.5 degree.C.

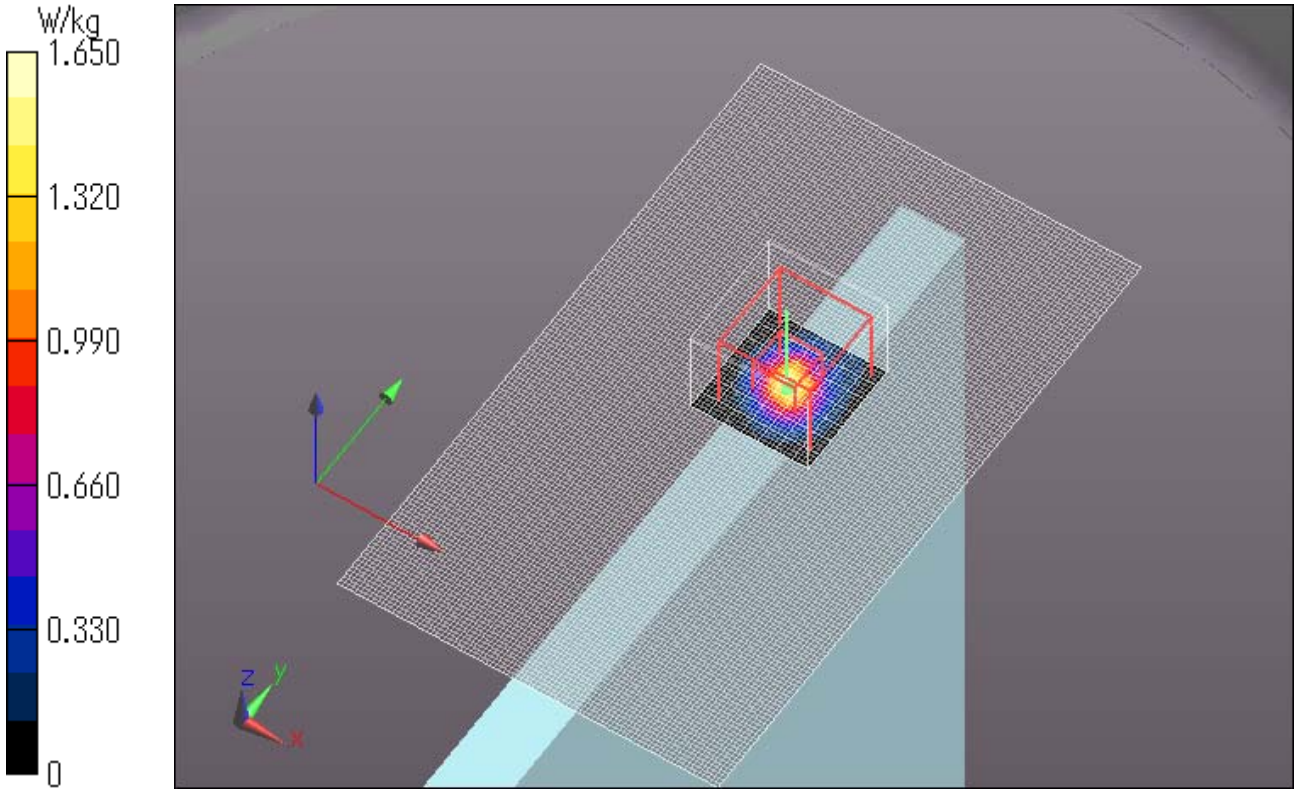

WLAN 11a 6Mbps Main Ant Bottom 0mm 5680MHz
Communication System: UID 0, WLAN 11a/b/g/n (0); Communication System Band: 11a/n (W56); Frequency: 5680 MHz; Duty Cycle: 1:1
Medium parameters used: f = 5680 MHz; σ = 6.016 S/m; ε_r = 47.255; ρ = 1000 kg/m^3
Phantom section: Flat Section
Measurement Standard: DASY5 (IEEE/IEC/ANSI C63.19-2007)
DASY5 Configuration
Probe: EX3DV4 - SN3922; ConvF(3.85, 3.85, 3.85); Calibrated: 2014/06/13;
Sensor-Surface: 2mm (Mechanical Surface Detection)
Electronics: DAE4 Sn1372; Calibrated: 2014/06/18
Phantom: ELI 4.0; Type: QDOVA001BB; Serial: 1045
Measurement SW: DASY52, Version 52.8 (8); SEMCAD X Version 14.6.10 (7331)

Area Scan (91x151x1): Interpolated grid: dx=1.000 mm, dy=1.000 mm
Maximum value of SAR (interpolated) = 1.97 W/kg

Zoom Scan (8x8x6)/Cube 0: Measurement grid: dx=4mm, dy=4mm, dz=2mm
Reference Value = 17.07 V/m; Power Drift = -0.07 dB
Peak SAR (extrapolated) = 2.58 W/kg
SAR(1 g) = 0.520 W/kg; SAR(10 g) = 0.106 W/kg
Maximum value of SAR (measured) = 1.29 W/kg

Date: 2014/07/27
Ambient Temp. : 24.0 degree.C. Liquid Temp.; 23.5 degree.C.

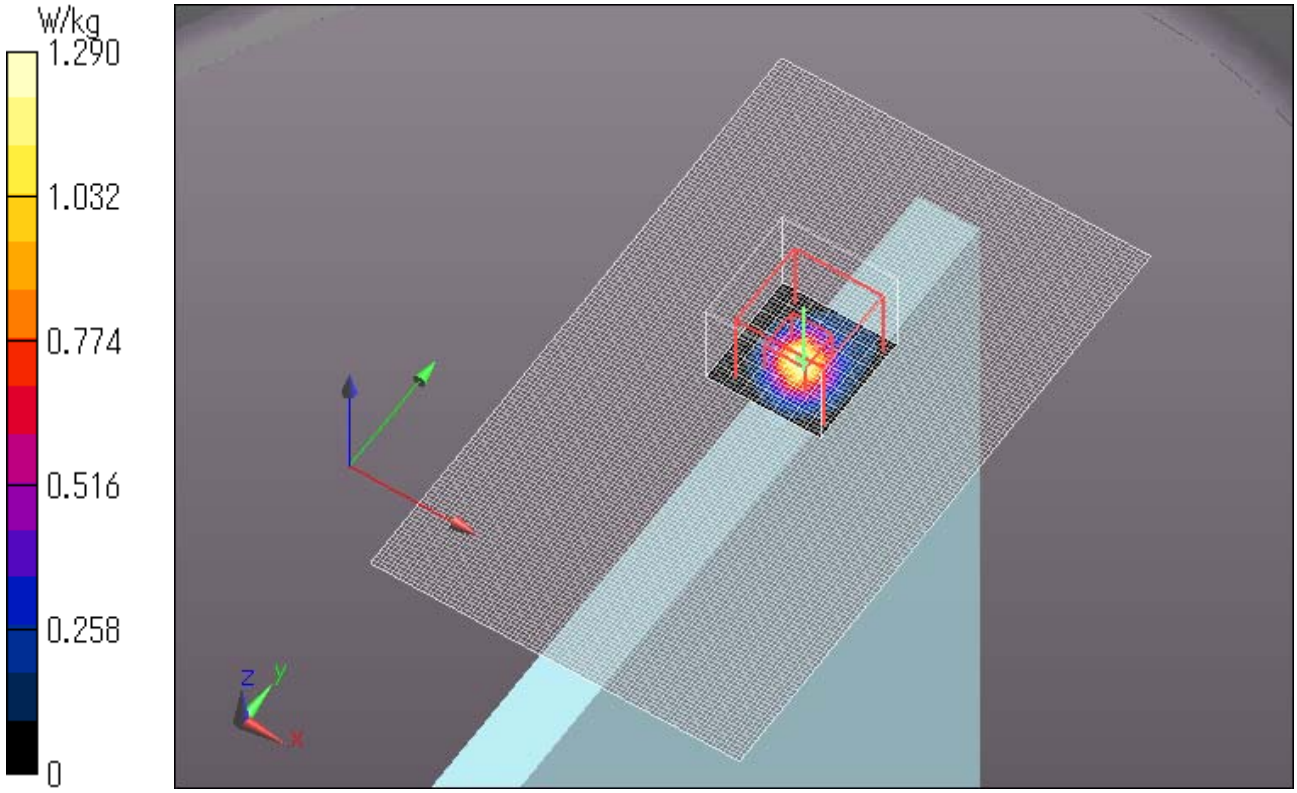

WLAN 11n20 MCS0 Main Ant Bottom 0mm 5560MHz
Communication System: UID 0, WLAN 11a/b/g/n (0); Communication System Band: 11a/n (W56); Frequency: 5560 MHz; Duty Cycle: 1:1
Medium parameters used: f = 5560 MHz; σ = 5.741 S/m; ε_r = 47.461; ρ = 1000 kg/m^3
Phantom section: Flat Section
Measurement Standard: DASY5 (IEEE/IEC/ANSI C63.19-2007)
DASY5 Configuration
Probe: EX3DV4 - SN3922; ConvF(3.85, 3.85, 3.85); Calibrated: 2014/06/13;
Sensor-Surface: 2mm (Mechanical Surface Detection)
Electronics: DAE4 Sn1372; Calibrated: 2014/06/18
Phantom: ELI 4.0; Type: QDOVA001BB; Serial: 1045
Measurement SW: DASY52, Version 52.8 (7); SEMCAD X Version 14.6.10 (7164)

Area Scan (91x151x1): Interpolated grid: dx=1.000 mm, dy=1.000 mm
Maximum value of SAR (interpolated) = 1.40 W/kg

Zoom Scan (8x8x6)/Cube 0: Measurement grid: dx=4mm, dy=4mm, dz=2mm
Reference Value = 16.060 V/m; Power Drift = 0.13 dB
Peak SAR (extrapolated) = 2.51 W/kg
SAR(1 g) = 0.497 W/kg; SAR(10 g) = 0.103 W/kg
Maximum value of SAR (measured) = 1.27 W/kg

Date: 2014/07/27
Ambient Temp. : 24.0 degree.C. Liquid Temp.; 23.5 degree.C.

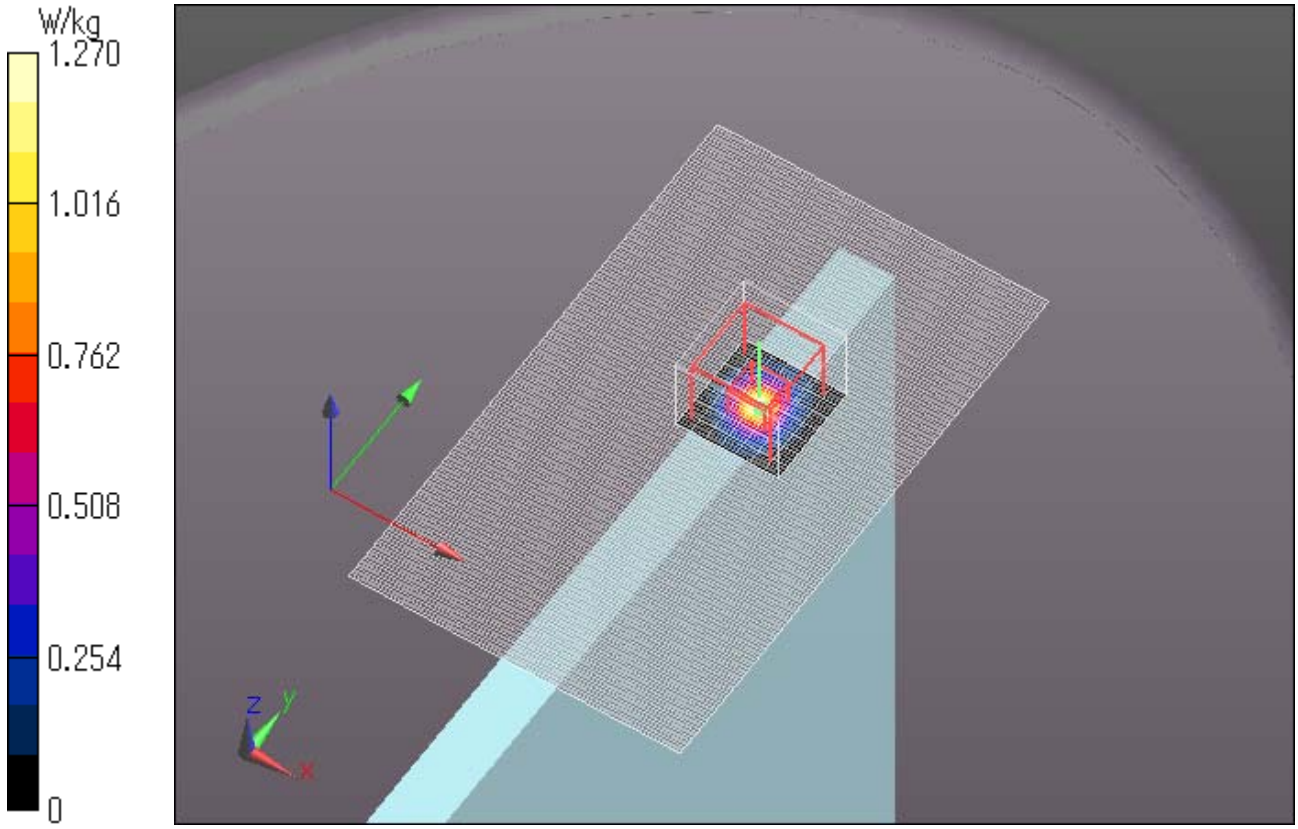

WLAN 11n20 MCS0 Main Ant Bottom 0mm 5640MHz
Communication System: UID 0, WLAN 11a/b/g/n (0); Communication System Band: 11a/n (W56); Frequency: 5640 MHz; Duty Cycle: 1:1
Medium parameters used: f = 5640 MHz; σ = 5.855 S/m; ε_r = 46.858; ρ = 1000 kg/m^3
Phantom section: Flat Section
Measurement Standard: DASY5 (IEEE/IEC/ANSI C63.19-2007)
DASY5 Configuration
Probe: EX3DV4 - SN3922; ConvF(3.85, 3.85, 3.85); Calibrated: 2014/06/13;
Sensor-Surface: 2mm (Mechanical Surface Detection)
Electronics: DAE4 Sn1372; Calibrated: 2014/06/18
Phantom: ELI 4.0; Type: QDOVA001BB; Serial: 1045
Measurement SW: DASY52, Version 52.8 (7); SEMCAD X Version 14.6.10 (7164)

Area Scan (91x151x1): Interpolated grid: dx=1.000 mm, dy=1.000 mm
Maximum value of SAR (interpolated) = 1.52 W/kg

Zoom Scan (8x8x6)/Cube 0: Measurement grid: dx=4mm, dy=4mm, dz=2mm
Reference Value = 18.608 V/m; Power Drift = -0.10 dB
Peak SAR (extrapolated) = 3.19 W/kg
SAR(1 g) = 0.629 W/kg; SAR(10 g) = 0.128 W/kg
Maximum value of SAR (measured) = 1.55 W/kg

Date: 2014/07/27
Ambient Temp. : 24.0 degree.C. Liquid Temp.; 23.5 degree.C.

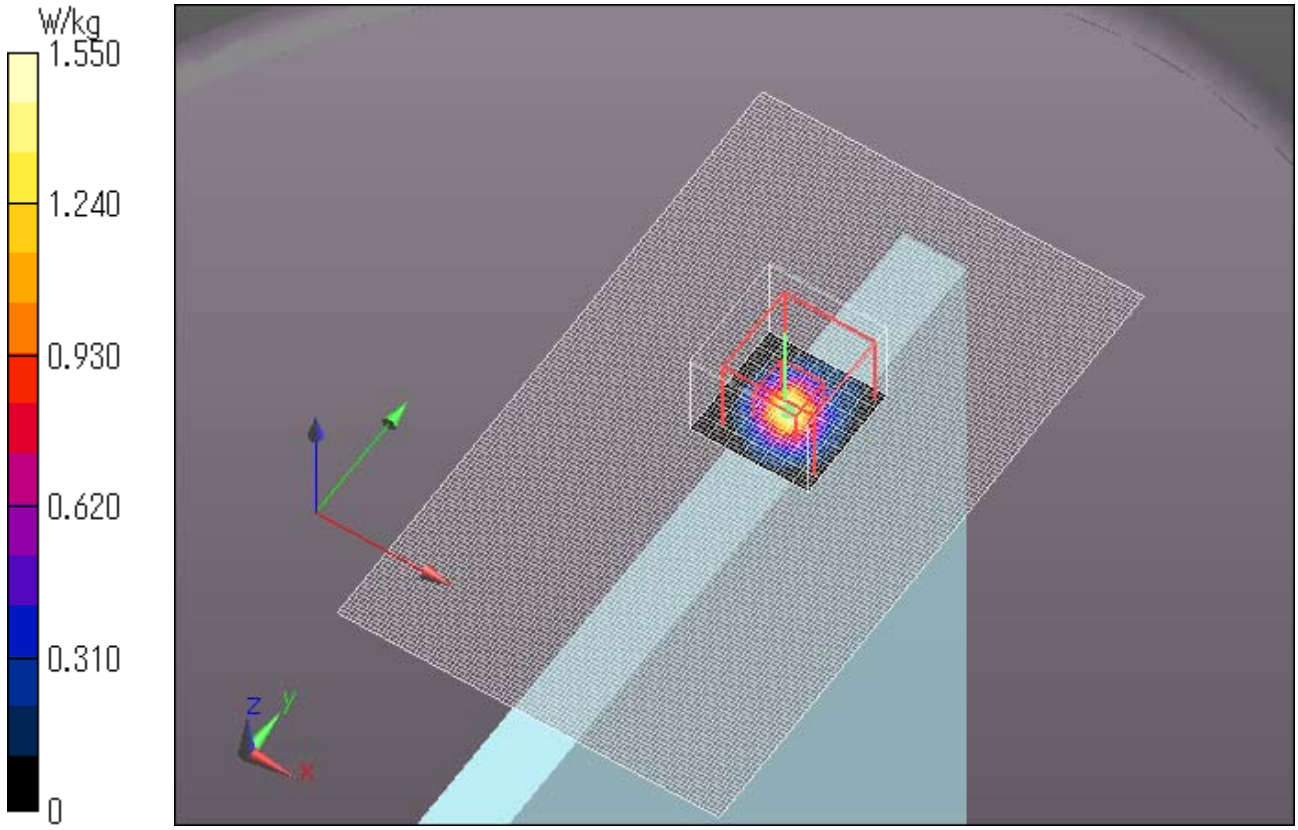

WLAN 11n20 MCS0 Main Ant Bottom 0mm 5680MHz
Communication System: UID 0, WLAN 11a/b/g/n (0); Communication System Band: 11a/n (W56); Frequency: 5680 MHz; Duty Cycle: 1:1
Medium parameters used: f = 5680 MHz; σ = 6.016 S/m; ε_r = 47.255; ρ = 1000 kg/m^3
Phantom section: Flat Section
Measurement Standard: DASY5 (IEEE/IEC/ANSI C63.19-2007)
DASY5 Configuration
Probe: EX3DV4 - SN3922; ConvF(3.85, 3.85, 3.85); Calibrated: 2014/06/13;
Sensor-Surface: 2mm (Mechanical Surface Detection)
Electronics: DAE4 Sn1372; Calibrated: 2014/06/18
Phantom: ELI 4.0; Type: QDOVA001BB; Serial: 1045
Measurement SW: DASY52, Version 52.8 (7); SEMCAD X Version 14.6.10 (7164)

Area Scan (91x151x1): Interpolated grid: dx=1.000 mm, dy=1.000 mm
Maximum value of SAR (interpolated) = 1.58 W/kg

Zoom Scan (8x8x6)/Cube 0: Measurement grid: dx=4mm, dy=4mm, dz=2mm
Reference Value = 15.285 V/m; Power Drift = 0.08 dB
Peak SAR (extrapolated) = 2.23 W/kg
SAR(1 g) = 0.440 W/kg; SAR(10 g) = 0.088 W/kg
Maximum value of SAR (measured) = 1.20 W/kg

Date: 2014/07/27
Ambient Temp. : 24.0 degree.C. Liquid Temp.; 23.5 degree.C.

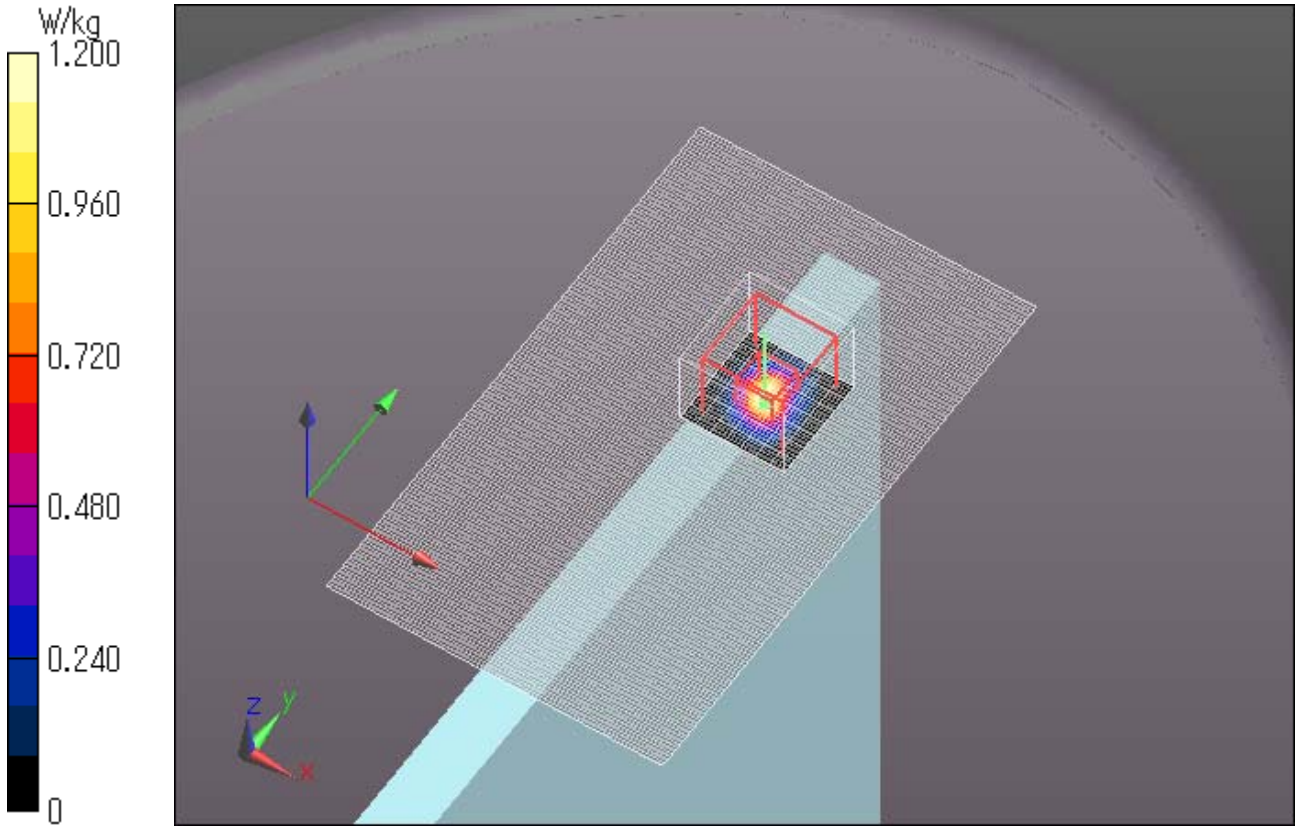

WLAN 11a 6Mbps Sub Ant Front 0mm 5520MHz
Communication System: UID 0, WLAN 11a/b/g/n (0); Communication System Band: 11a/n (W56); Frequency: 5520 MHz; Duty Cycle: 1:1
Medium parameters used: f = 5520 MHz; σ = 5.552 S/m; ε_r = 47.764; ρ = 1000 kg/m^3
Phantom section: Flat Section
Measurement Standard: DASY5 (IEEE/IEC/ANSI C63.19-2007)
DASY5 Configuration
Probe: EX3DV4 - SN3825; ConvF(3.92, 3.92, 3.92); Calibrated: 2013/12/13;
Sensor-Surface: 2mm (Mechanical Surface Detection)
Electronics: DAE4 Sn518; Calibrated: 2013/10/14
Phantom: ELI 4.0; Type: QDOVA001BB; Serial: 1045
Measurement SW: DASY52, Version 52.8 (8); SEMCAD X Version 14.6.10 (7331)

Area Scan (91x151x1): Interpolated grid: dx=1.000 mm, dy=1.000 mm
Maximum value of SAR (interpolated) = 0.556 W/kg

Zoom Scan (8x8x6)/Cube 0: Measurement grid: dx=4mm, dy=4mm, dz=2mm
Reference Value = 11.17 V/m; Power Drift = -0.20 dB
Peak SAR (extrapolated) = 1.21 W/kg
SAR(1 g) = 0.263 W/kg; SAR(10 g) = 0.065 W/kg
Maximum value of SAR (measured) = 0.690 W/kg

Date: 2014/07/25
Ambient Temp. : 24.0 degree.C. Liquid Temp.; 23.5 degree.C.

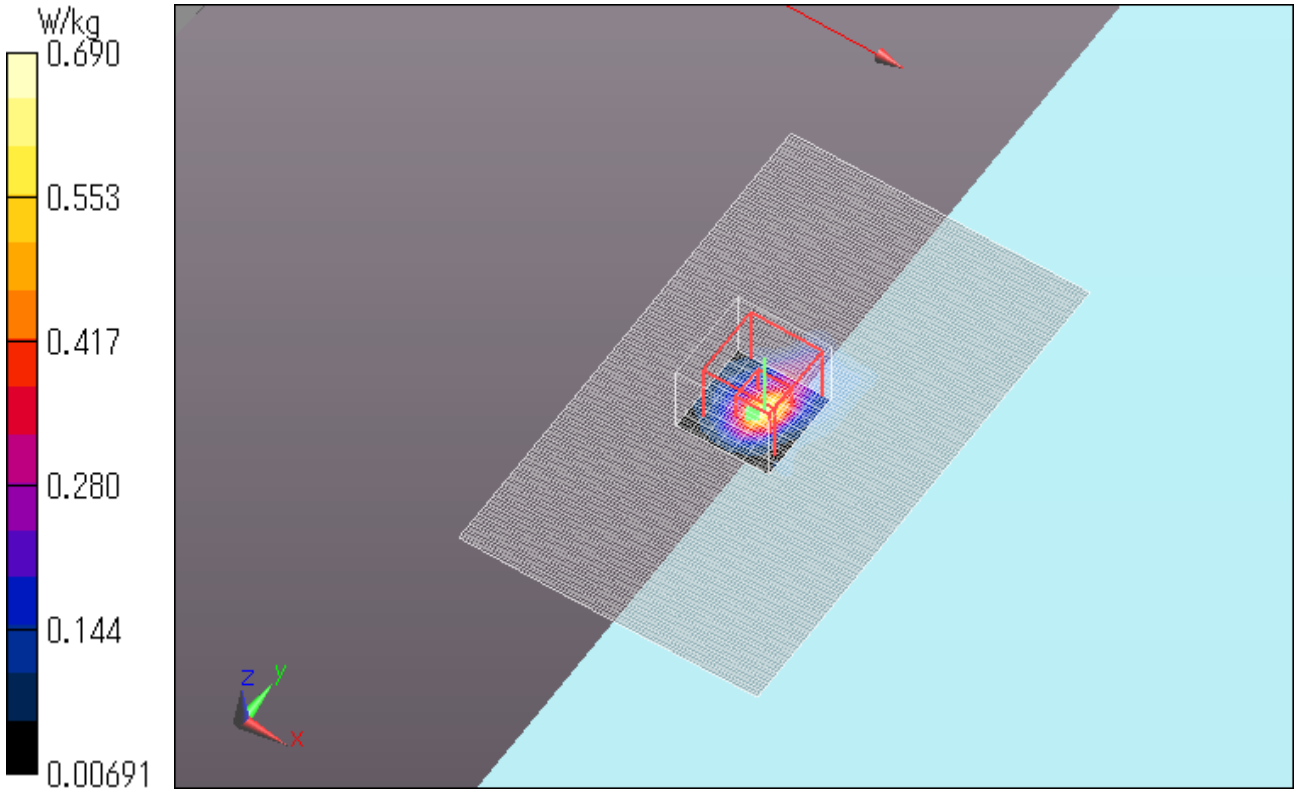

WLAN 11a 6Mbps Sub Ant Rear 0mm 5520MHz
Communication System: UID 0, WLAN 11a/b/g/n (0); Communication System Band: 11a/n (W56); Frequency: 5520 MHz; Duty Cycle: 1:1
Medium parameters used: f = 5520 MHz; σ = 5.552 S/m; ε_r = 47.764; ρ = 1000 kg/m^3
Phantom section: Flat Section
Measurement Standard: DASY5 (IEEE/IEC/ANSI C63.19-2007)
DASY5 Configuration
Probe: EX3DV4 - SN3825; ConvF(3.92, 3.92, 3.92); Calibrated: 2013/12/13;
Sensor-Surface: 2mm (Mechanical Surface Detection)
Electronics: DAE4 Sn518; Calibrated: 2013/10/14
Phantom: ELI 4.0; Type: QDOVA001BB; Serial: 1045
Measurement SW: DASY52, Version 52.8 (8); SEMCAD X Version 14.6.10 (7331)

Area Scan (91x151x1): Interpolated grid: dx=1.000 mm, dy=1.000 mm
Maximum value of SAR (interpolated) = 0.426 W/kg

Zoom Scan (8x8x6)/Cube 0: Measurement grid: dx=4mm, dy=4mm, dz=2mm
Reference Value = 9.110 V/m; Power Drift = 0.09 dB
Peak SAR (extrapolated) = 1.09 W/kg
SAR(1 g) = 0.205 W/kg; SAR(10 g) = 0.068 W/kg
Maximum value of SAR (measured) = 0.474 W/kg

Date: 2014/07/25
Ambient Temp. : 24.0 degree.C. Liquid Temp.; 23.5 degree.C.

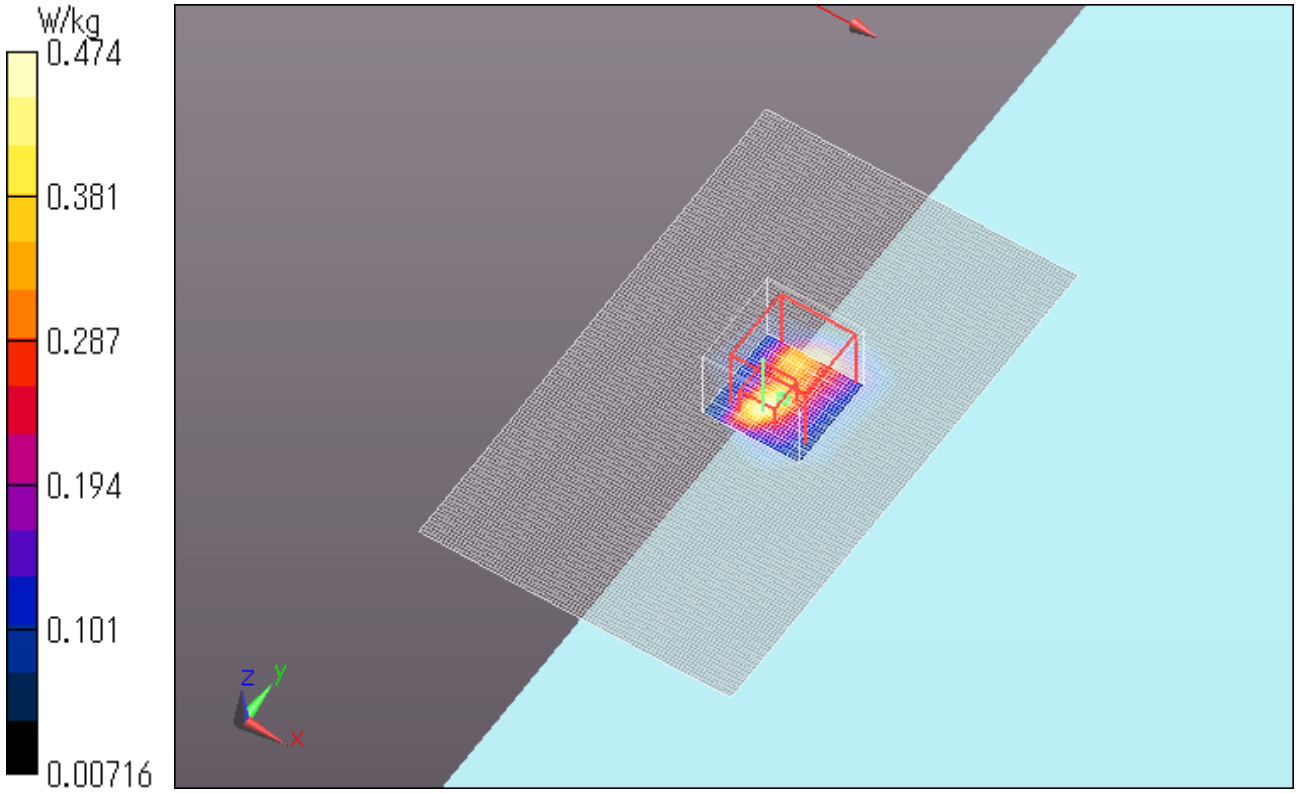

WLAN 11a 6Mbps Sub Ant Top 0mm 5520MHz
Communication System: UID 0, WLAN 11a/b/g/n (0); Communication System Band: 11a/n (W56); Frequency: 5520 MHz; Duty Cycle: 1:1
Medium parameters used: f = 5520 MHz; σ = 5.552 S/m; ε_r = 47.764; ρ = 1000 kg/m^3
Phantom section: Flat Section
Measurement Standard: DASY5 (IEEE/IEC/ANSI C63.19-2007)
DASY5 Configuration
Probe: EX3DV4 - SN3825; ConvF(3.92, 3.92, 3.92); Calibrated: 2013/12/13;
Sensor-Surface: 2mm (Mechanical Surface Detection)
Electronics: DAE4 Sn518; Calibrated: 2013/10/14
Phantom: ELI 4.0; Type: QDOVA001BB; Serial: 1045
Measurement SW: DASY52, Version 52.8 (8); SEMCAD X Version 14.6.10 (7331)

Area Scan (91x151x1): Interpolated grid: dx=1.000 mm, dy=1.000 mm
Maximum value of SAR (interpolated) = 2.01 W/kg

Zoom Scan (8x8x6)/Cube 0: Measurement grid: dx=4mm, dy=4mm, dz=2mm
Reference Value = 17.24 V/m; Power Drift = 0.18 dB
Peak SAR (extrapolated) = 4.35 W/kg
SAR(1 g) = 0.886 W/kg; SAR(10 g) = 0.256 W/kg
Maximum value of SAR (measured) = 2.03 W/kg

Date: 2014/07/25
Ambient Temp. : 24.0 degree.C. Liquid Temp.; 23.5 degree.C.

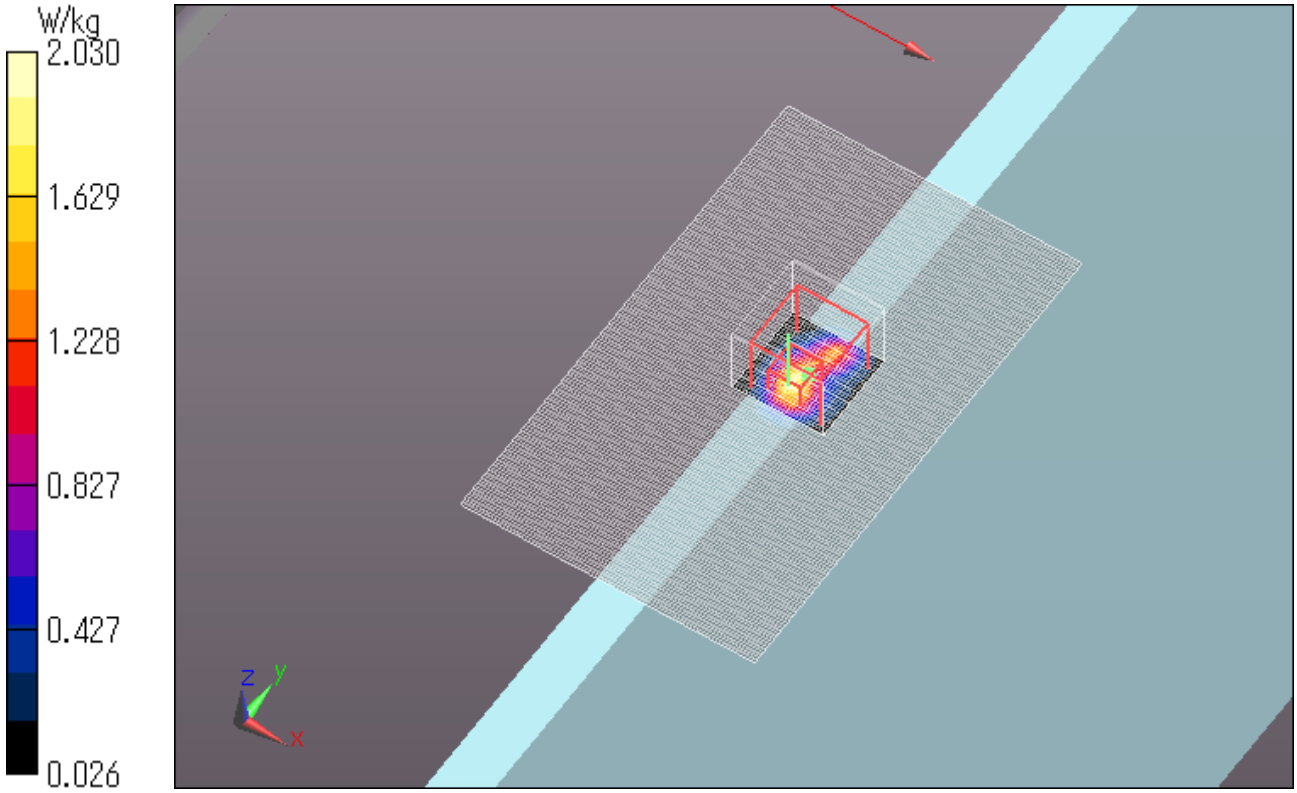

WLAN 11n20 MCS0 Sub Ant Top 0mm 5500MHz
Communication System: UID 0, WLAN 11a/b/g/n (0); Communication System Band: 11a/n (W56); Frequency: 5500 MHz; Duty Cycle: 1:1
Medium parameters used: f = 5500 MHz; σ = 5.46 S/m; ε_r = 47.595; ρ = 1000 kg/m^3
Phantom section: Flat Section
Measurement Standard: DASY5 (IEEE/IEC/ANSI C63.19-2007)
DASY5 Configuration
Probe: EX3DV4 - SN3825; ConvF(3.92, 3.92, 3.92); Calibrated: 2013/12/13;
Sensor-Surface: 2mm (Mechanical Surface Detection)
Electronics: DAE4 Sn518; Calibrated: 2013/10/14
Phantom: ELI 4.0; Type: QDOVA001BB; Serial: 1045
Measurement SW: DASY52, Version 52.8 (7); SEMCAD X Version 14.6.10 (7164)

Area Scan (91x151x1): Interpolated grid: dx=1.000 mm, dy=1.000 mm
Maximum value of SAR (interpolated) = 2.40 W/kg

Zoom Scan (8x8x6)/Cube 0: Measurement grid: dx=4mm, dy=4mm, dz=2mm
Reference Value = 21.617 V/m; Power Drift = 0.04 dB
Peak SAR (extrapolated) = 4.63 W/kg
SAR(1 g) = 0.943 W/kg; SAR(10 g) = 0.246 W/kg
Maximum value of SAR (measured) = 2.24 W/kg

Date: 2014/07/25
Ambient Temp. : 24.0 degree.C. Liquid Temp.; 23.5 degree.C.

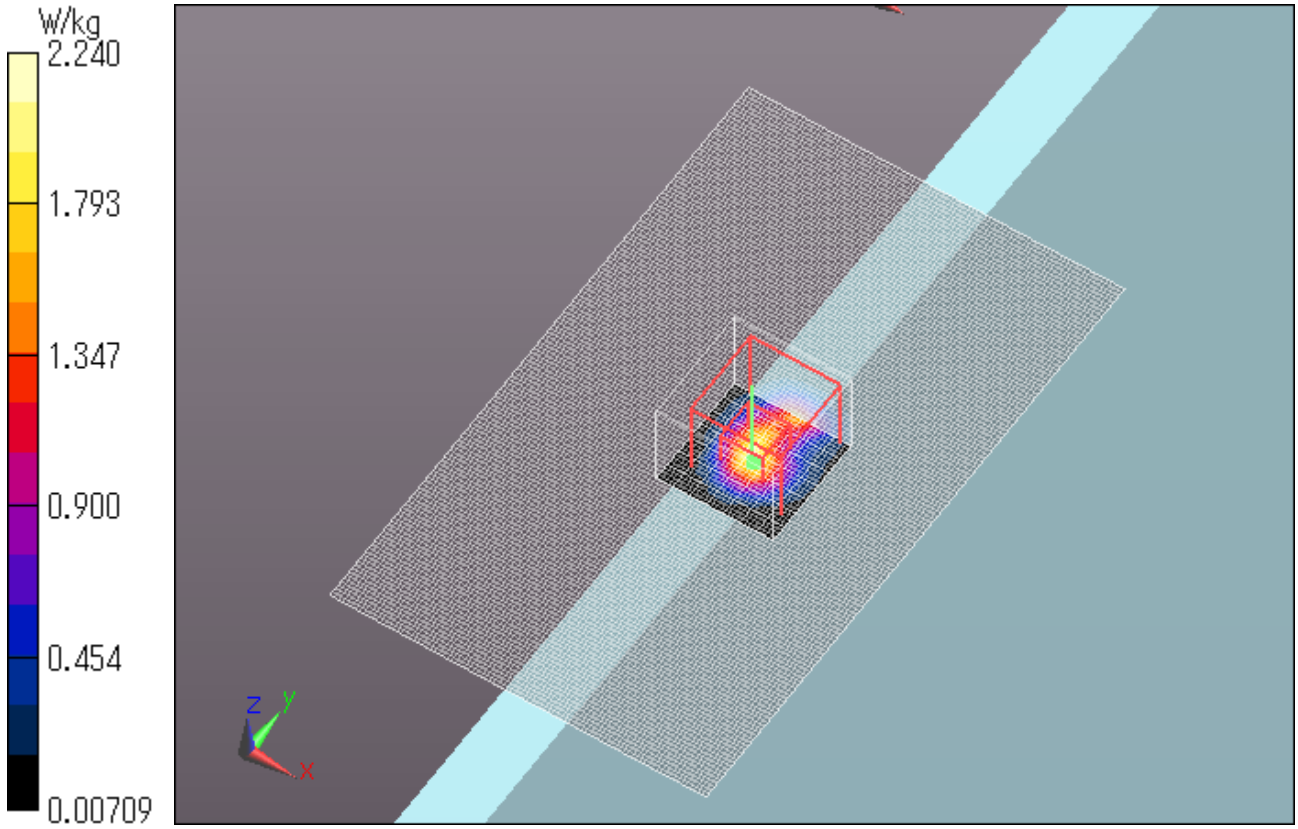

WLAN 11a 6Mbps Sub Ant Top 0mm 5560MHz
Communication System: UID 0, WLAN 11a/b/g/n (0); Communication System Band: 11a/n (W56); Frequency: 5560 MHz; Duty Cycle: 1:1
Medium parameters used: f = 5560 MHz; σ = 5.635 S/m; ε_r = 47.792; ρ = 1000 kg/m^3
Phantom section: Flat Section
Measurement Standard: DASY5 (IEEE/IEC/ANSI C63.19-2007)
DASY5 Configuration
Probe: EX3DV4 - SN3922; ConvF(3.85, 3.85, 3.85); Calibrated: 2014/06/13;
Sensor-Surface: 2mm (Mechanical Surface Detection)
Electronics: DAE4 Sn1372; Calibrated: 2014/06/18
Phantom: ELI 4.0; Type: QDOVA001BB; Serial: 1045
Measurement SW: DASY52, Version 52.8 (8); SEMCAD X Version 14.6.10 (7331)

Area Scan (91x151x1): Interpolated grid: dx=1.000 mm, dy=1.000 mm
Maximum value of SAR (interpolated) = 3.01 W/kg

Zoom Scan (8x8x6)/Cube 0: Measurement grid: dx=4mm, dy=4mm, dz=2mm
Reference Value = 16.32 V/m; Power Drift = 0.09 dB
Peak SAR (extrapolated) = 4.62 W/kg
SAR(1 g) = 0.887 W/kg; SAR(10 g) = 0.225 W/kg
Maximum value of SAR (measured) = 2.16 W/kg

Date: 2014/07/28
Ambient Temp. : 24.0 degree.C. Liquid Temp.; 23.5 degree.C.

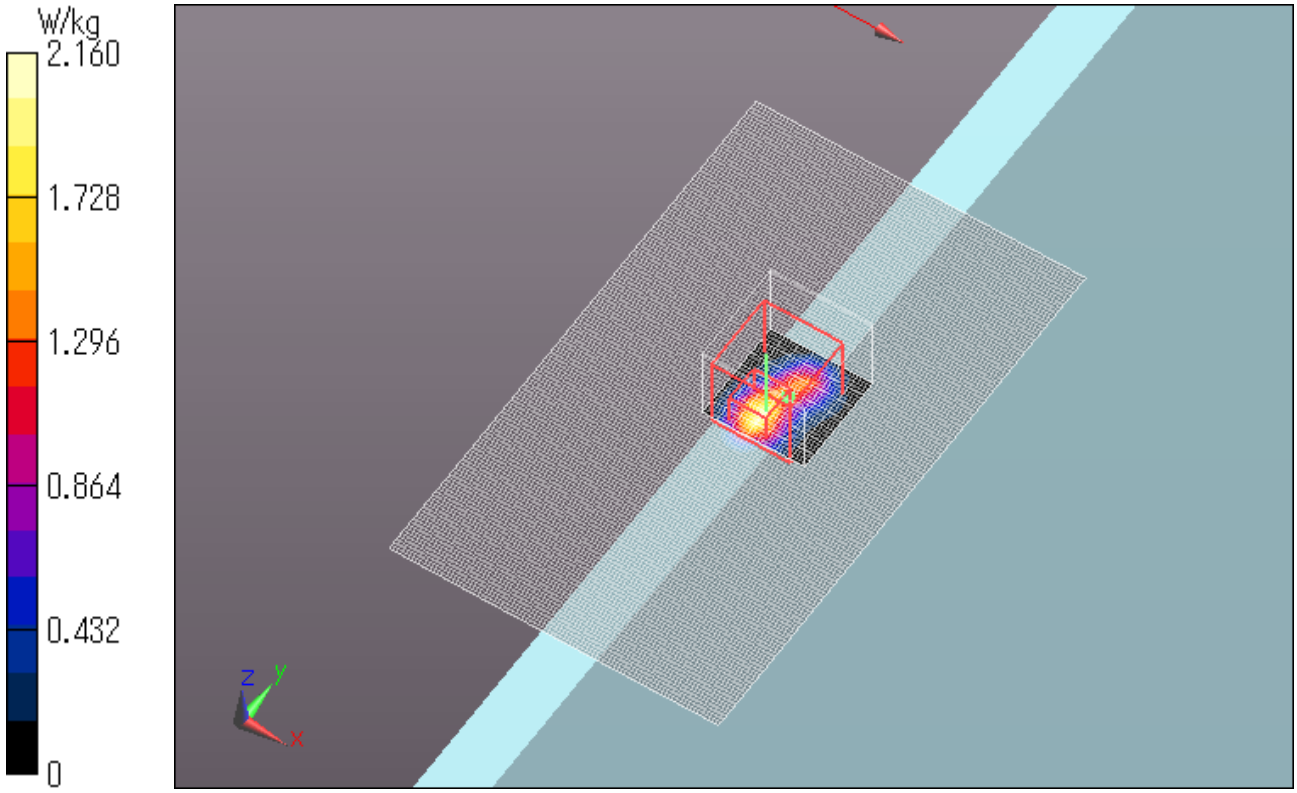

WLAN 11a 6Mbps Sub Ant Top 0mm 5640MHz
Communication System: UID 0, WLAN 11a/b/g/n (0); Communication System Band: 11a/n (W56); Frequency: 5640 MHz; Duty Cycle: 1:1
Medium parameters used: f = 5640 MHz; σ = 5.838 S/m; ε_r = 47.021; ρ = 1000 kg/m^3
Phantom section: Flat Section
Measurement Standard: DASY5 (IEEE/IEC/ANSI C63.19-2007)
DASY5 Configuration
Probe: EX3DV4 - SN3922; ConvF(3.85, 3.85, 3.85); Calibrated: 2014/06/13;
Sensor-Surface: 2mm (Mechanical Surface Detection)
Electronics: DAE4 Sn1372; Calibrated: 2014/06/18
Phantom: ELI 4.0; Type: QDOVA001BB; Serial: 1045
Measurement SW: DASY52, Version 52.8 (8); SEMCAD X Version 14.6.10 (7331)

Area Scan (91x151x1): Interpolated grid: dx=1.000 mm, dy=1.000 mm
Maximum value of SAR (interpolated) = 2.74 W/kg

Zoom Scan (8x8x6)/Cube 0: Measurement grid: dx=4mm, dy=4mm, dz=2mm
Reference Value = 21.09 V/m; Power Drift = 0.13 dB
Peak SAR (extrapolated) = 5.03 W/kg
SAR(1 g) = 0.929 W/kg; SAR(10 g) = 0.226 W/kg
Maximum value of SAR (measured) = 2.42 W/kg

Date: 2014/07/28
Ambient Temp. : 24.0 degree.C. Liquid Temp.; 23.5 degree.C.

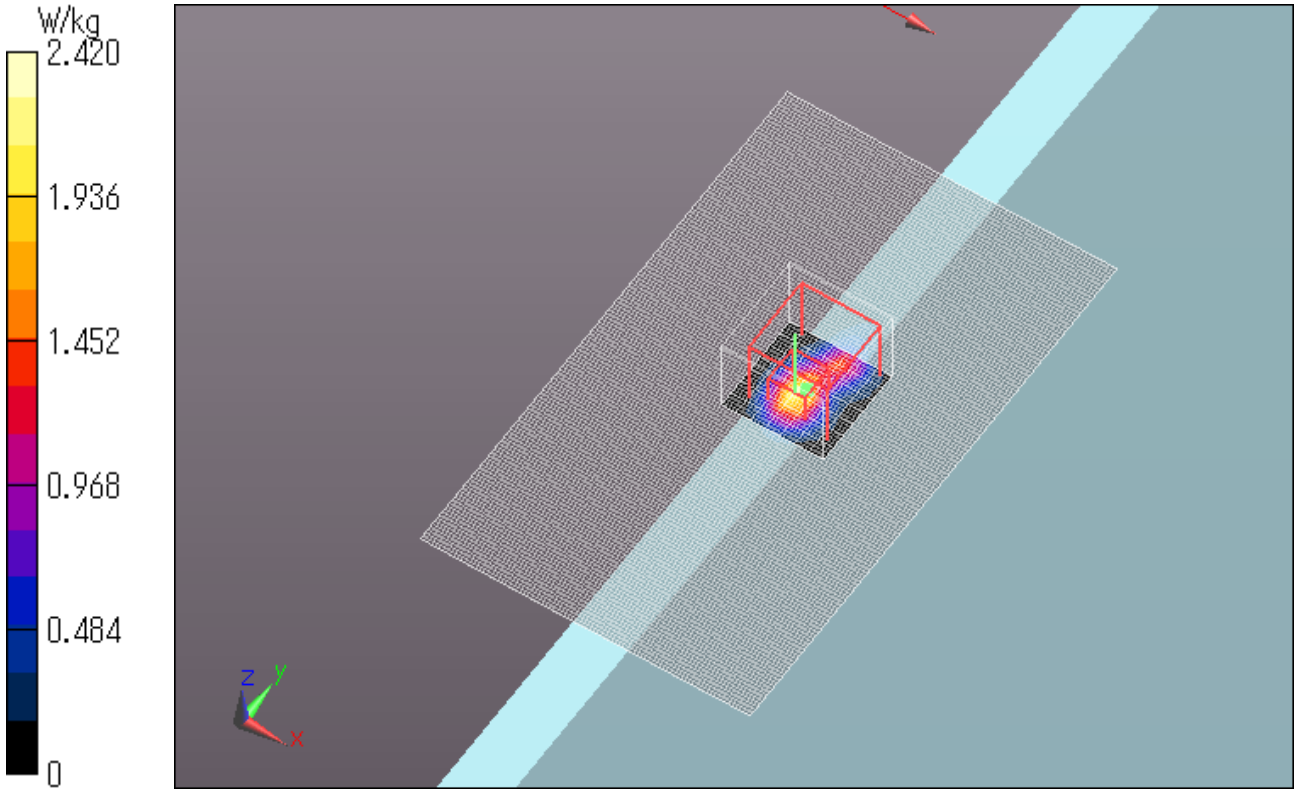

WLAN 11a 6Mbps Sub Ant Top 0mm 5700MHz
Communication System: UID 0, WLAN 11a/b/g/n (0); Communication System Band: 11a/n (W56); Frequency: 5700 MHz; Duty Cycle: 1:1
Medium parameters used: f = 5700 MHz; σ = 5.824 S/m; ε_r = 47.374; ρ = 1000 kg/m^3
Phantom section: Flat Section
Measurement Standard: DASY5 (IEEE/IEC/ANSI C63.19-2007)
DASY5 Configuration
Probe: EX3DV4 - SN3922; ConvF(3.85, 3.85, 3.85); Calibrated: 2014/06/13;
Sensor-Surface: 2mm (Mechanical Surface Detection)
Electronics: DAE4 Sn1372; Calibrated: 2014/06/18
Phantom: ELI 4.0; Type: QDOVA001BB; Serial: 1045
Measurement SW: DASY52, Version 52.8 (8); SEMCAD X Version 14.6.10 (7331)

Area Scan (91x151x1): Interpolated grid: dx=1.000 mm, dy=1.000 mm
Maximum value of SAR (interpolated) = 2.04 W/kg

Zoom Scan (8x8x6)/Cube 0: Measurement grid: dx=4mm, dy=4mm, dz=2mm
Reference Value = 19.06 V/m; Power Drift = -0.04 dB
Peak SAR (extrapolated) = 6.01 W/kg
SAR(1 g) = 0.654 W/kg; SAR(10 g) = 0.155 W/kg
Maximum value of SAR (measured) = 1.61 W/kg

Date: 2014/07/28
Ambient Temp. : 24.0 degree.C. Liquid Temp.; 23.5 degree.C.

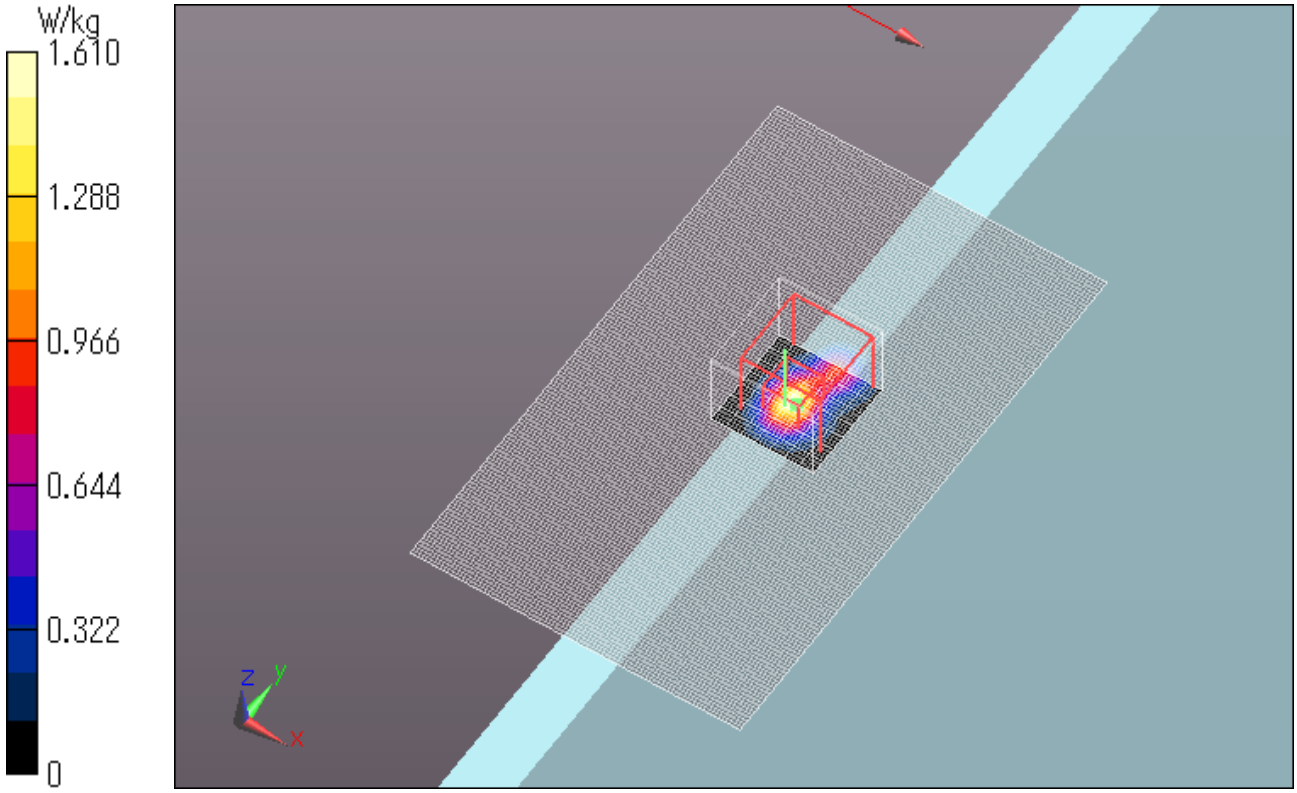

WLAN 11n20 MCS0 Sub Ant Top 0mm 5560MHz
Communication System: UID 0, WLAN 11a/b/g/n (0); Communication System Band: 11a/n (W56); Frequency: 5560 MHz; Duty Cycle: 1:1
Medium parameters used: f = 5560 MHz; σ = 5.635 S/m; ε_r = 47.792; ρ = 1000 kg/m^3
Phantom section: Flat Section
Measurement Standard: DASY5 (IEEE/IEC/ANSI C63.19-2007)
DASY5 Configuration
Probe: EX3DV4 - SN3922; ConvF(3.85, 3.85, 3.85); Calibrated: 2014/06/13;
Sensor-Surface: 2mm (Mechanical Surface Detection)
Electronics: DAE4 Sn1372; Calibrated: 2014/06/18
Phantom: ELI 4.0; Type: QDOVA001BB; Serial: 1045
Measurement SW: DASY52, Version 52.8 (7); SEMCAD X Version 14.6.10 (7164)

Area Scan (91x151x1): Interpolated grid: dx=1.000 mm, dy=1.000 mm
Maximum value of SAR (interpolated) = 2.88 W/kg

Zoom Scan (8x8x6)/Cube 0: Measurement grid: dx=4mm, dy=4mm, dz=2mm
Reference Value = 21.313 V/m; Power Drift = -0.12 dB
Peak SAR (extrapolated) = 4.57 W/kg
SAR(1 g) = 0.857 W/kg; SAR(10 g) = 0.223 W/kg
Maximum value of SAR (measured) = 2.03 W/kg

Date: 2014/07/28
Ambient Temp. : 24.0 degree.C. Liquid Temp.; 23.5 degree.C.

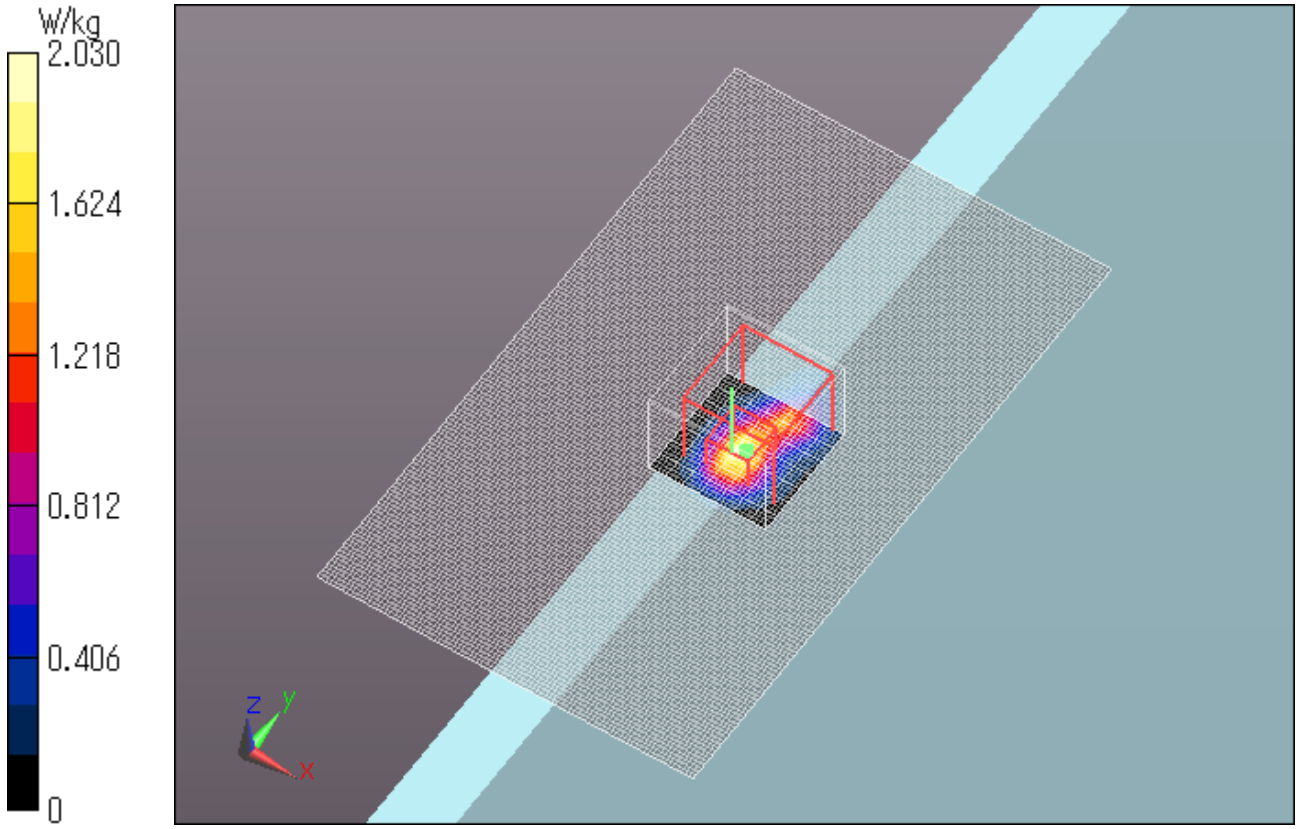

WLAN 11n20 MCS0 Sub Ant Top 0mm 5640MHz
Communication System: UID 0, WLAN 11a/b/g/n (0); Communication System Band: 11a/n (W56); Frequency: 5640 MHz; Duty Cycle: 1:1
Medium parameters used: f = 5640 MHz; σ = 5.838 S/m; ε_r = 47.021; ρ = 1000 kg/m^3
Phantom section: Flat Section
Measurement Standard: DASY5 (IEEE/IEC/ANSI C63.19-2007)
DASY5 Configuration
Probe: EX3DV4 - SN3922; ConvF(3.85, 3.85, 3.85); Calibrated: 2014/06/13;
Sensor-Surface: 2mm (Mechanical Surface Detection)
Electronics: DAE4 Sn1372; Calibrated: 2014/06/18
Phantom: ELI 4.0; Type: QDOVA001BB; Serial: 1045
Measurement SW: DASY52, Version 52.8 (7); SEMCAD X Version 14.6.10 (7164)

Area Scan (91x151x1): Interpolated grid: dx=1.000 mm, dy=1.000 mm
Maximum value of SAR (interpolated) = 2.94 W/kg

Zoom Scan (8x8x6)/Cube 0: Measurement grid: dx=4mm, dy=4mm, dz=2mm
Reference Value = 21.761 V/m; Power Drift = 0.00 dB
Peak SAR (extrapolated) = 4.79 W/kg
SAR(1 g) = 0.879 W/kg; SAR(10 g) = 0.216 W/kg
Maximum value of SAR (measured) = 2.06 W/kg

Date: 2014/07/28
Ambient Temp. : 24.0 degree.C. Liquid Temp.; 23.5 degree.C.

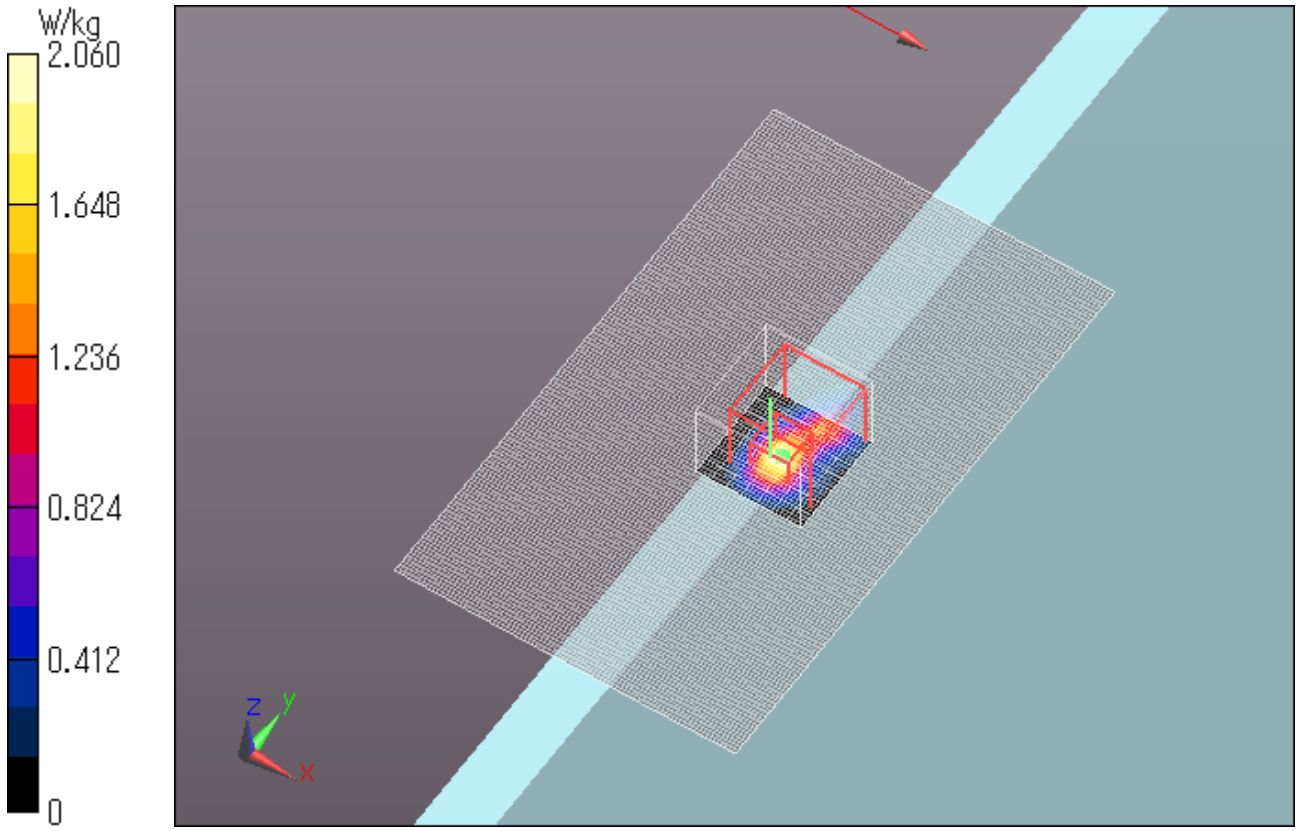

WLAN 11n20 MCS0 Sub Ant Top 0mm 5680MHz
Communication System: UID 0, WLAN 11a/b/g/n (0); Communication System Band: 11a/n (W56); Frequency: 5680 MHz; Duty Cycle: 1:1
Medium parameters used: f = 5680 MHz; σ = 5.85 S/m; ε_r = 47.319; ρ = 1000 kg/m^3
Phantom section: Flat Section
Measurement Standard: DASY5 (IEEE/IEC/ANSI C63.19-2007)
DASY5 Configuration
Probe: EX3DV4 - SN3922; ConvF(3.85, 3.85, 3.85); Calibrated: 2014/06/13;
Sensor-Surface: 2mm (Mechanical Surface Detection)
Electronics: DAE4 Sn1372; Calibrated: 2014/06/18
Phantom: ELI 4.0; Type: QDOVA001BB; Serial: 1045
Measurement SW: DASY52, Version 52.8 (7); SEMCAD X Version 14.6.10 (7164)

Area Scan (91x151x1): Interpolated grid: dx=1.000 mm, dy=1.000 mm
Maximum value of SAR (interpolated) = 2.58 W/kg

Zoom Scan (8x8x6)/Cube 0: Measurement grid: dx=4mm, dy=4mm, dz=2mm
Reference Value = 20.531 V/m; Power Drift = -0.13 dB
Peak SAR (extrapolated) = 4.31 W/kg
SAR(1 g) = 0.772 W/kg; SAR(10 g) = 0.184 W/kg
Maximum value of SAR (measured) = 1.74 W/kg

Date: 2014/07/28
Ambient Temp. : 24.0 degree.C. Liquid Temp.; 23.5 degree.C.

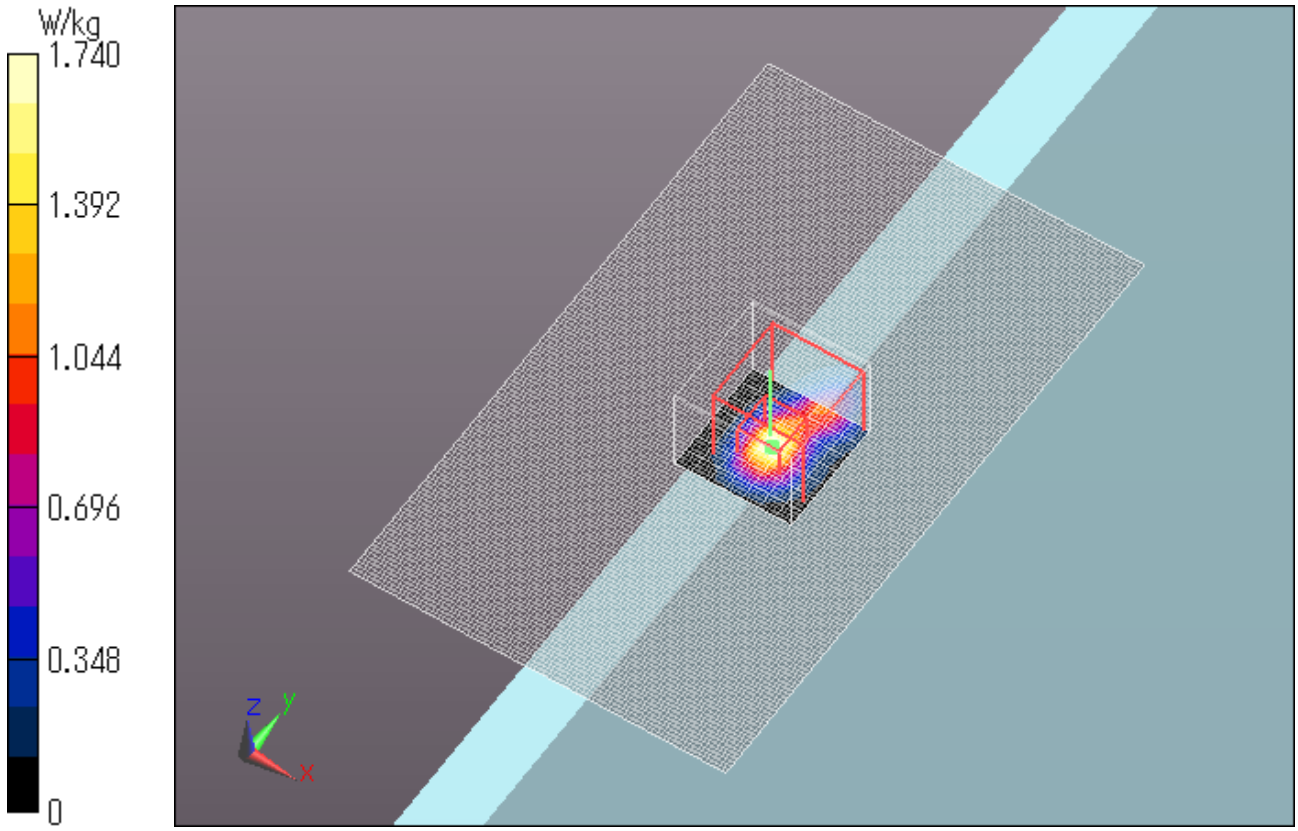

WLAN 11n20 MCS0 Sub Ant Top 0mm 5500MHz - Repeat -
Communication System: UID 0, WLAN 11a/b/g/n (0); Communication System Band: 11a/n (W56); Frequency: 5500 MHz; Duty Cycle: 1:1
Medium parameters used: f = 5500 MHz; σ = 5.557 S/m; ε_r = 47.702; ρ = 1000 kg/m^3
Phantom section: Flat Section
Measurement Standard: DASY5 (IEEE/IEC/ANSI C63.19-2007)
DASY5 Configuration
Probe: EX3DV4 - SN3922; ConvF(3.89, 3.89, 3.89); Calibrated: 2014/06/13;
Sensor-Surface: 2mm (Mechanical Surface Detection)
Electronics: DAE4 Sn1372; Calibrated: 2014/06/18
Phantom: ELI 4.0; Type: QDOVA001BB; Serial: 1045
Measurement SW: DASY52, Version 52.8 (7); SEMCAD X Version 14.6.10 (7164)

Area Scan (91x151x1): Interpolated grid: dx=1.000 mm, dy=1.000 mm
Maximum value of SAR (interpolated) = 2.85 W/kg

Zoom Scan (8x8x6)/Cube 0: Measurement grid: dx=4mm, dy=4mm, dz=2mm
Reference Value = 22.666 V/m; Power Drift = -0.07 dB
Peak SAR (extrapolated) = 5.11 W/kg
SAR(1 g) = 0.979 W/kg; SAR(10 g) = 0.258 W/kg
Maximum value of SAR (measured) = 2.14 W/kg

Date: 2014/07/28
Ambient Temp. : 24.0 degree.C. Liquid Temp.; 23.5 degree.C.

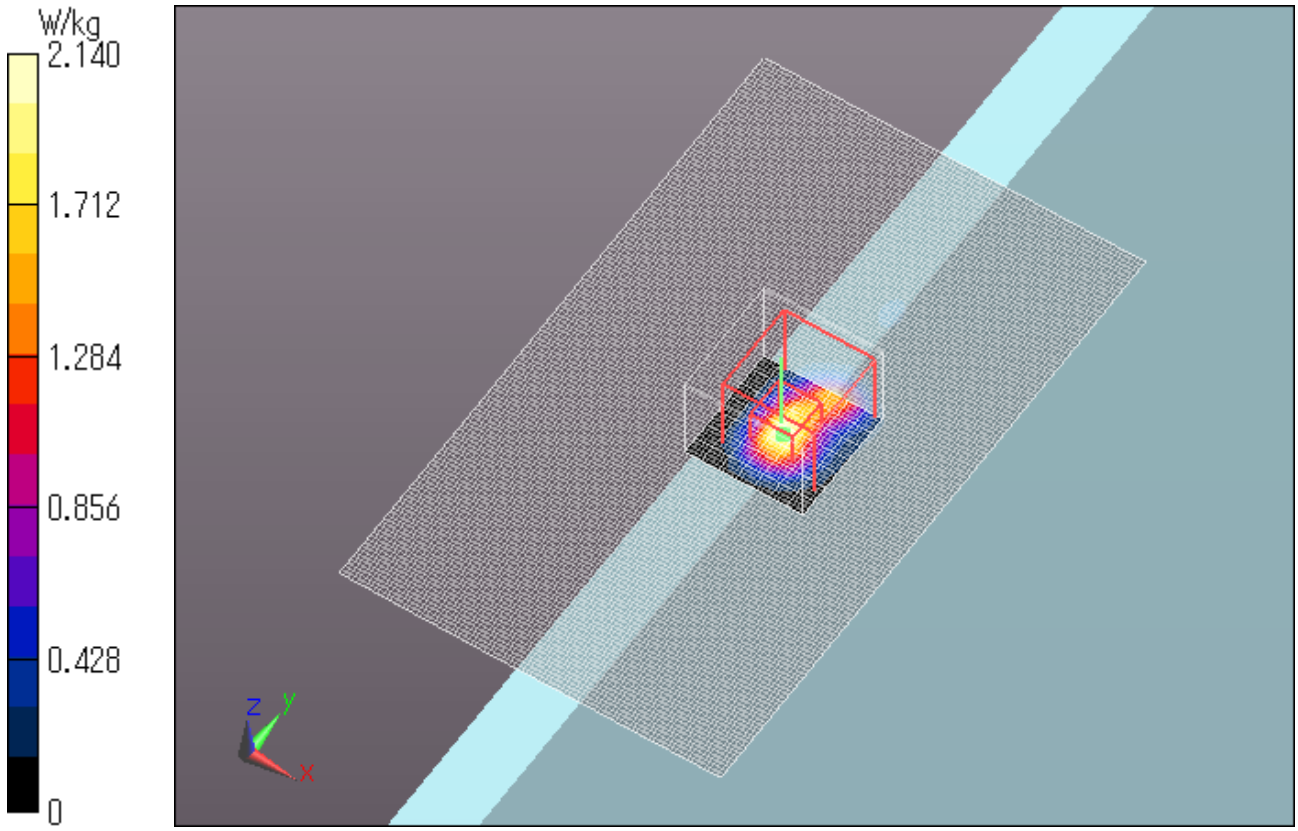

v) WLAN Body 5.8GHz Band

WLAN 11a 6Mbps Main Ant Front 0mm 5825MHz
Communication System: UID 0, WLAN 11a/b/g/n (0); Communication System Band: 11a/n (W58); Frequency: 5825 MHz; Duty Cycle: 1:1
Medium parameters used: f = 5825 MHz; σ = 5.823 S/m; ε_r = 46.592; ρ = 1000 kg/m^3
Phantom section: Flat Section
Measurement Standard: DASY5 (IEEE/IEC/ANSI C63.19-2007)
DASY5 Configuration
Probe: EX3DV4 - SN3825; ConvF(4.05, 4.05, 4.05); Calibrated: 2013/12/13;
Sensor-Surface: 2mm (Mechanical Surface Detection)
Electronics: DAE4 Sn518; Calibrated: 2013/10/14
Phantom: ELI 4.0; Type: QDOVA001BB; Serial: 1045
Measurement SW: DASY52, Version 52.8 (8); SEMCAD X Version 14.6.10 (7331)

Area Scan (91x131x1): Interpolated grid: dx=1.000 mm, dy=1.000 mm
Maximum value of SAR (interpolated) = 0.683 W/kg

Zoom Scan (8x8x6)/Cube 0: Measurement grid: dx=4mm, dy=4mm, dz=2mm
Reference Value = 15.53 V/m; Power Drift = -0.02 dB
Peak SAR (extrapolated) = 2.62 W/kg
SAR(1 g) = 0.437 W/kg; SAR(10 g) = 0.105 W/kg
Maximum value of SAR (measured) = 0.996 W/kg

Date: 2014/07/30
Ambient Temp. : 24.0 degree.C. Liquid Temp.; 23.5 degree.C.

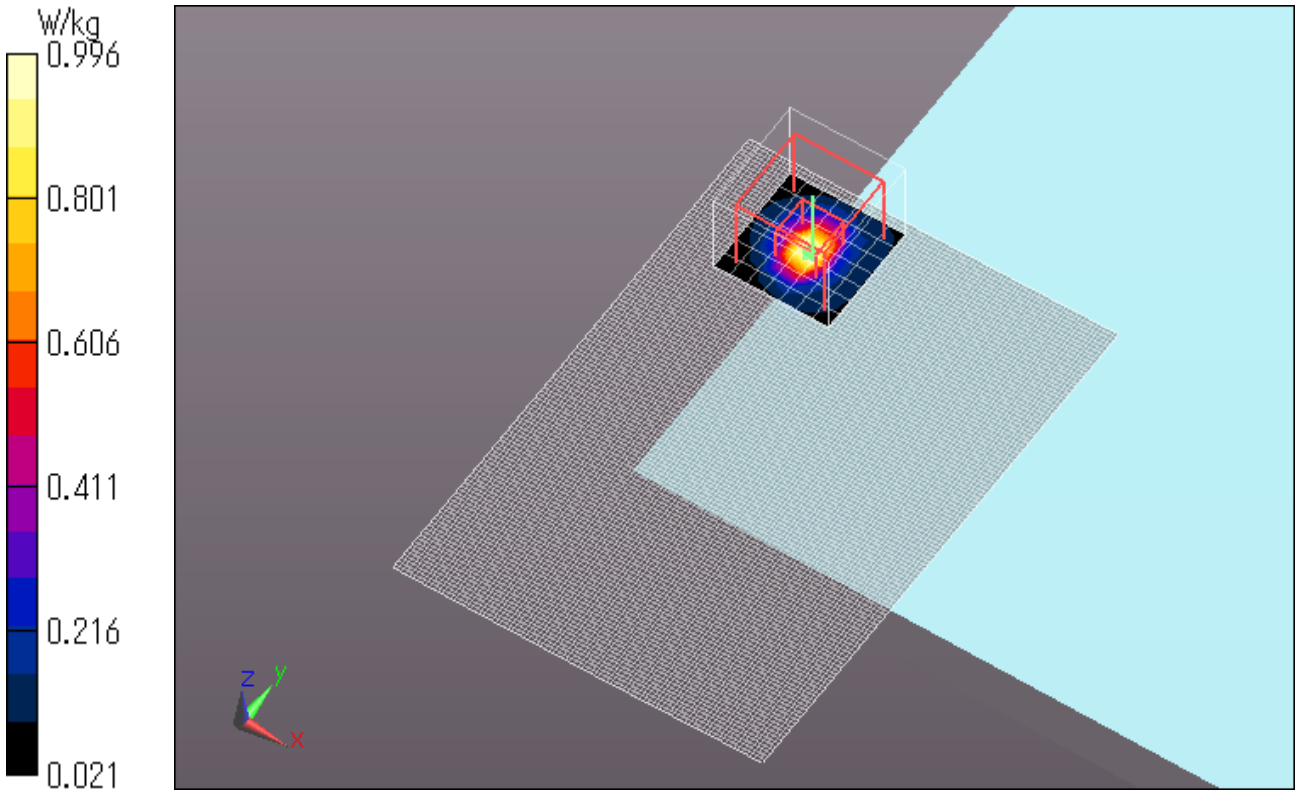

WLAN 11a 6Mbps Main Ant Rear 0mm 5825MHz
Communication System: UID 0, WLAN 11a/b/g/n (0); Communication System Band: 11a/n (W58); Frequency: 5825 MHz; Duty Cycle: 1:1
Medium parameters used: f = 5825 MHz; σ = 5.823 S/m; ε_r = 46.592; ρ = 1000 kg/m^3
Phantom section: Flat Section
Measurement Standard: DASY5 (IEEE/IEC/ANSI C63.19-2007)
DASY5 Configuration
Probe: EX3DV4 - SN3825; ConvF(4.05, 4.05, 4.05); Calibrated: 2013/12/13;
Sensor-Surface: 2mm (Mechanical Surface Detection)
Electronics: DAE4 Sn518; Calibrated: 2013/10/14
Phantom: ELI 4.0; Type: QDOVA001BB; Serial: 1045
Measurement SW: DASY52, Version 52.8 (8); SEMCAD X Version 14.6.10 (7331)

Area Scan (91x151x1): Interpolated grid: dx=1.000 mm, dy=1.000 mm
Maximum value of SAR (interpolated) = 0.166 W/kg

Zoom Scan (8x8x6)/Cube 0: Measurement grid: dx=4mm, dy=4mm, dz=2mm
Reference Value = 5.507 V/m; Power Drift = 0.17 dB
Peak SAR (extrapolated) = 0.450 W/kg
SAR(1 g) = 0.090 W/kg; SAR(10 g) = 0.047 W/kg
Maximum value of SAR (measured) = 0.170 W/kg

Date: 2014/07/30
Ambient Temp. : 24.0 degree.C. Liquid Temp.; 23.5 degree.C.

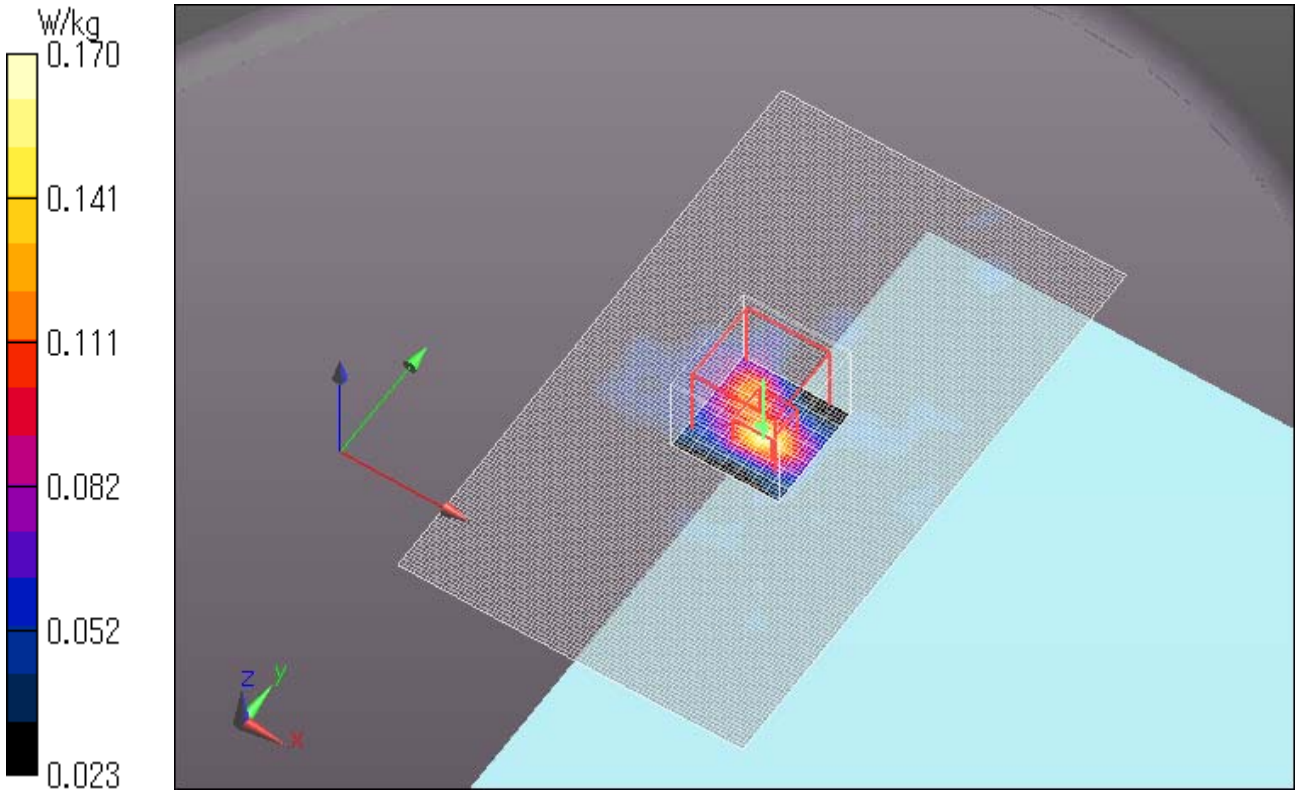

WLAN 11a 6Mbps Main Ant Bottom 0mm 5825MHz
Communication System: UID 0, WLAN 11a/b/g/n (0); Communication System Band: 11a/n (W58); Frequency: 5825 MHz; Duty Cycle: 1:1
Medium parameters used: f = 5825 MHz; σ = 5.823 S/m; ε_r = 46.592; ρ = 1000 kg/m^3
Phantom section: Flat Section
Measurement Standard: DASY5 (IEEE/IEC/ANSI C63.19-2007)
DASY5 Configuration
Probe: EX3DV4 - SN3825; ConvF(4.05, 4.05, 4.05); Calibrated: 2013/12/13;
Sensor-Surface: 2mm (Mechanical Surface Detection)
Electronics: DAE4 Sn518; Calibrated: 2013/10/14
Phantom: ELI 4.0; Type: QDOVA001BB; Serial: 1045
Measurement SW: DASY52, Version 52.8 (8); SEMCAD X Version 14.6.10 (7331)

Area Scan (91x151x1): Interpolated grid: dx=1.000 mm, dy=1.000 mm
Maximum value of SAR (interpolated) = 1.59 W/kg

Zoom Scan (8x8x6)/Cube 0: Measurement grid: dx=4mm, dy=4mm, dz=2mm
Reference Value = 19.29 V/m; Power Drift = -0.18 dB
Peak SAR (extrapolated) = 4.19 W/kg
SAR(1 g) = 0.688 W/kg; SAR(10 g) = 0.154 W/kg
Maximum value of SAR (measured) = 1.56 W/kg

Date: 2014/07/30
Ambient Temp. : 24.0 degree.C. Liquid Temp.; 23.5 degree.C.

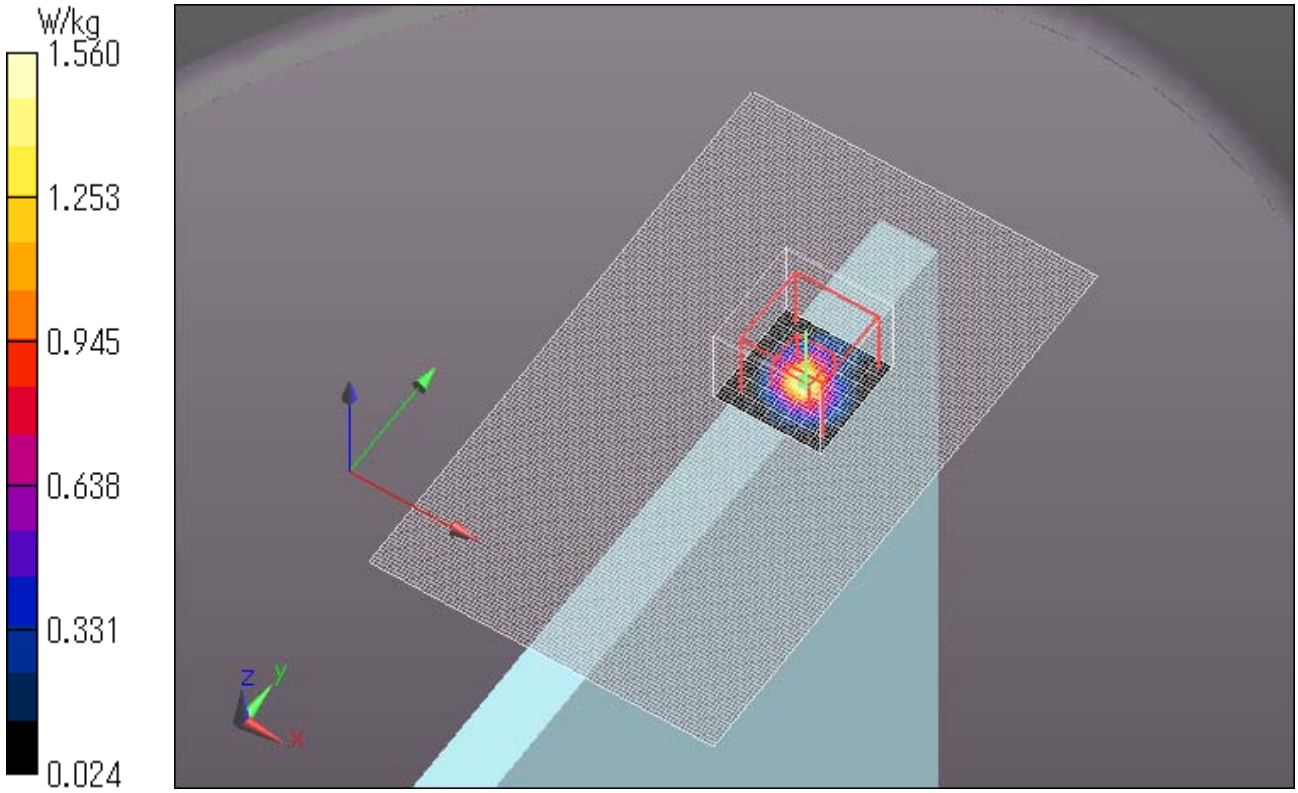

WLAN 11n20 MCS0 Main Ant Bottom 0mm 5825MHz
Communication System: UID 0, WLAN 11a/b/g/n (0); Communication System Band: 11a/n (W58); Frequency: 5825 MHz; Duty Cycle: 1:1
Medium parameters used: f = 5825 MHz; σ = 5.823 S/m; ε_r = 46.592; ρ = 1000 kg/m^3
Phantom section: Flat Section
Measurement Standard: DASY5 (IEEE/IEC/ANSI C63.19-2007)
DASY5 Configuration
Probe: EX3DV4 - SN3825; ConvF(4.05, 4.05, 4.05); Calibrated: 2013/12/13;
Sensor-Surface: 2mm (Mechanical Surface Detection)
Electronics: DAE4 Sn518; Calibrated: 2013/10/14
Phantom: ELI 4.0; Type: QDOVA001BB; Serial: 1045
Measurement SW: DASY52, Version 52.8 (8); SEMCAD X Version 14.6.10 (7331)

Area Scan (91x151x1): Interpolated grid: dx=1.000 mm, dy=1.000 mm
Maximum value of SAR (interpolated) = 1.51 W/kg

Zoom Scan (8x8x6)/Cube 0: Measurement grid: dx=4mm, dy=4mm, dz=2mm
Reference Value = 19.04 V/m; Power Drift = -0.04 dB
Peak SAR (extrapolated) = 4.10 W/kg
SAR(1 g) = 0.689 W/kg; SAR(10 g) = 0.153 W/kg
Maximum value of SAR (measured) = 1.66 W/kg

Date: 2014/07/30
Ambient Temp. : 24.0 degree.C. Liquid Temp.; 23.5 degree.C.

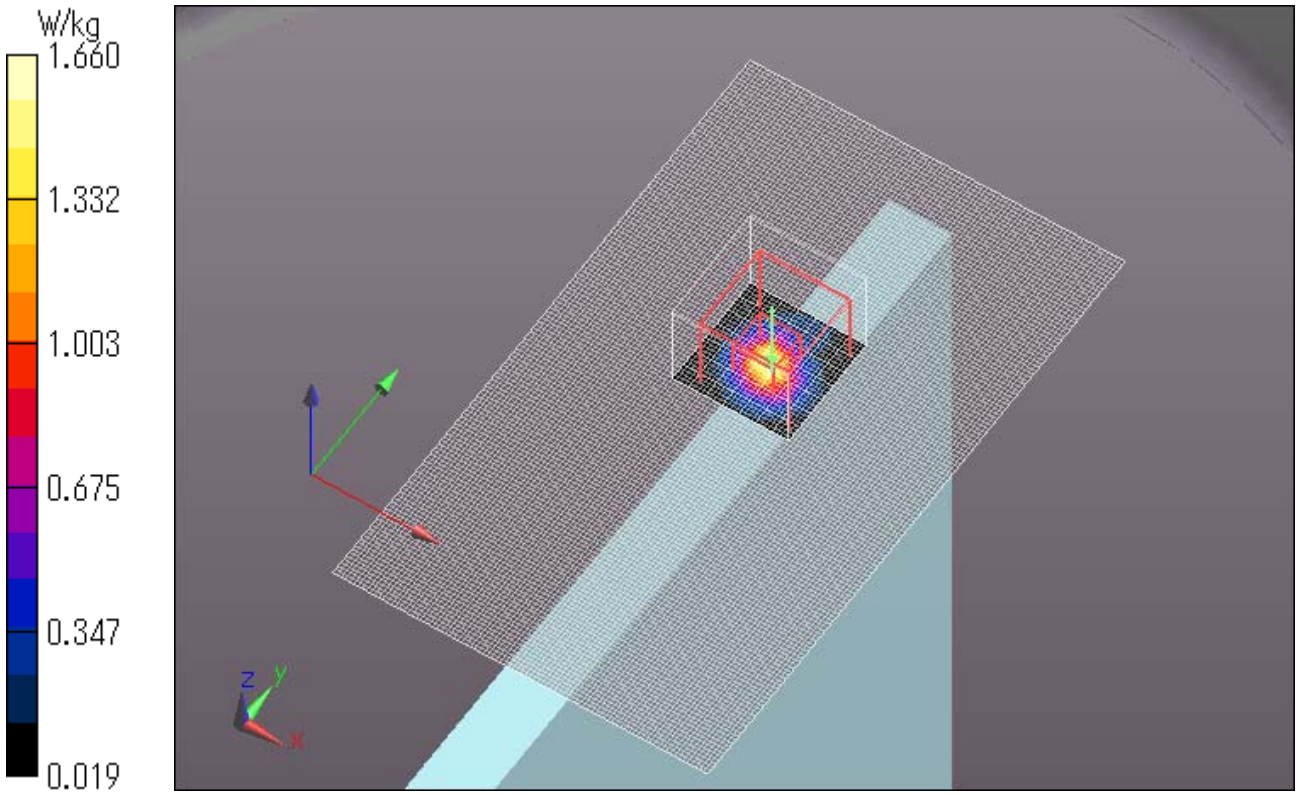

WLAN 11a 6Mbps Main Ant Bottom 0mm 5745MHz
Communication System: UID 0, WLAN 11a/b/g/n (0); Communication System Band: 11a/n (W58); Frequency: 5745 MHz; Duty Cycle: 1:1
Medium parameters used: f = 5745 MHz; σ = 6.087 S/m; ε_r = 46.779; ρ = 1000 kg/m^3
Phantom section: Flat Section
Measurement Standard: DASY5 (IEEE/IEC/ANSI C63.19-2007)
DASY5 Configuration
Probe: EX3DV4 - SN3825; ConvF(4.05, 4.05, 4.05); Calibrated: 2013/12/13;
Sensor-Surface: 2mm (Mechanical Surface Detection)
Electronics: DAE4 Sn518; Calibrated: 2013/10/14
Phantom: ELI 4.0; Type: QDOVA001BB; Serial: 1045
Measurement SW: DASY52, Version 52.8 (8); SEMCAD X Version 14.6.10 (7331)

Area Scan (91x151x1): Interpolated grid: dx=1.000 mm, dy=1.000 mm
Maximum value of SAR (interpolated) = 0.881 W/kg

Zoom Scan (8x8x6)/Cube 0: Measurement grid: dx=4mm, dy=4mm, dz=2mm
Reference Value = 13.25 V/m; Power Drift = -0.04 dB
Peak SAR (extrapolated) = 2.21 W/kg
SAR(1 g) = 0.369 W/kg; SAR(10 g) = 0.087 W/kg
Maximum value of SAR (measured) = 0.874 W/kg

Date: 2014/07/30
Ambient Temp. : 24.0 degree.C. Liquid Temp.; 23.5 degree.C.

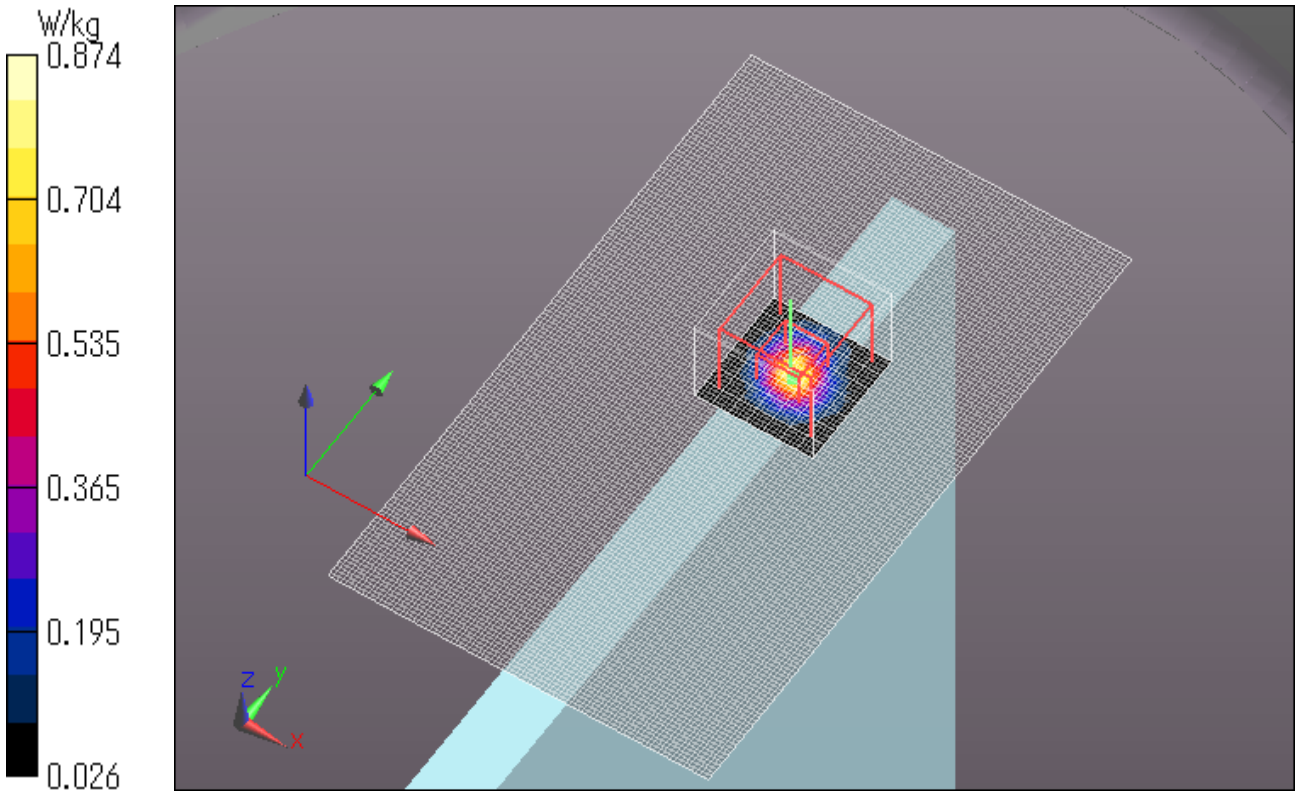

WLAN 11a 6Mbps Main Ant Bottom 0mm 5805MHz
Communication System: UID 0, WLAN 11a/b/g/n (0); Communication System Band: 11a/n (W58); Frequency: 5805 MHz; Duty Cycle: 1:1
Medium parameters used: f = 5805 MHz; σ = 6.068 S/m; ε_r = 47.086; ρ = 1000 kg/m^3
Phantom section: Flat Section
Measurement Standard: DASY5 (IEEE/IEC/ANSI C63.19-2007)
DASY5 Configuration
Probe: EX3DV4 - SN3825; ConvF(4.05, 4.05, 4.05); Calibrated: 2013/12/13;
Sensor-Surface: 2mm (Mechanical Surface Detection)
Electronics: DAE4 Sn518; Calibrated: 2013/10/14
Phantom: ELI 4.0; Type: QDOVA001BB; Serial: 1045
Measurement SW: DASY52, Version 52.8 (8); SEMCAD X Version 14.6.10 (7331)

Area Scan (91x151x1): Interpolated grid: dx=1.000 mm, dy=1.000 mm
Maximum value of SAR (interpolated) = 1.22 W/kg

Zoom Scan (8x8x6)/Cube 0: Measurement grid: dx=4mm, dy=4mm, dz=2mm
Reference Value = 17.52 V/m; Power Drift = 0.00 dB
Peak SAR (extrapolated) = 3.62 W/kg
SAR(1 g) = 0.616 W/kg; SAR(10 g) = 0.140 W/kg
Maximum value of SAR (measured) = 1.43 W/kg

Date: 2014/07/30
Ambient Temp. : 24.0 degree.C. Liquid Temp.; 23.5 degree.C.

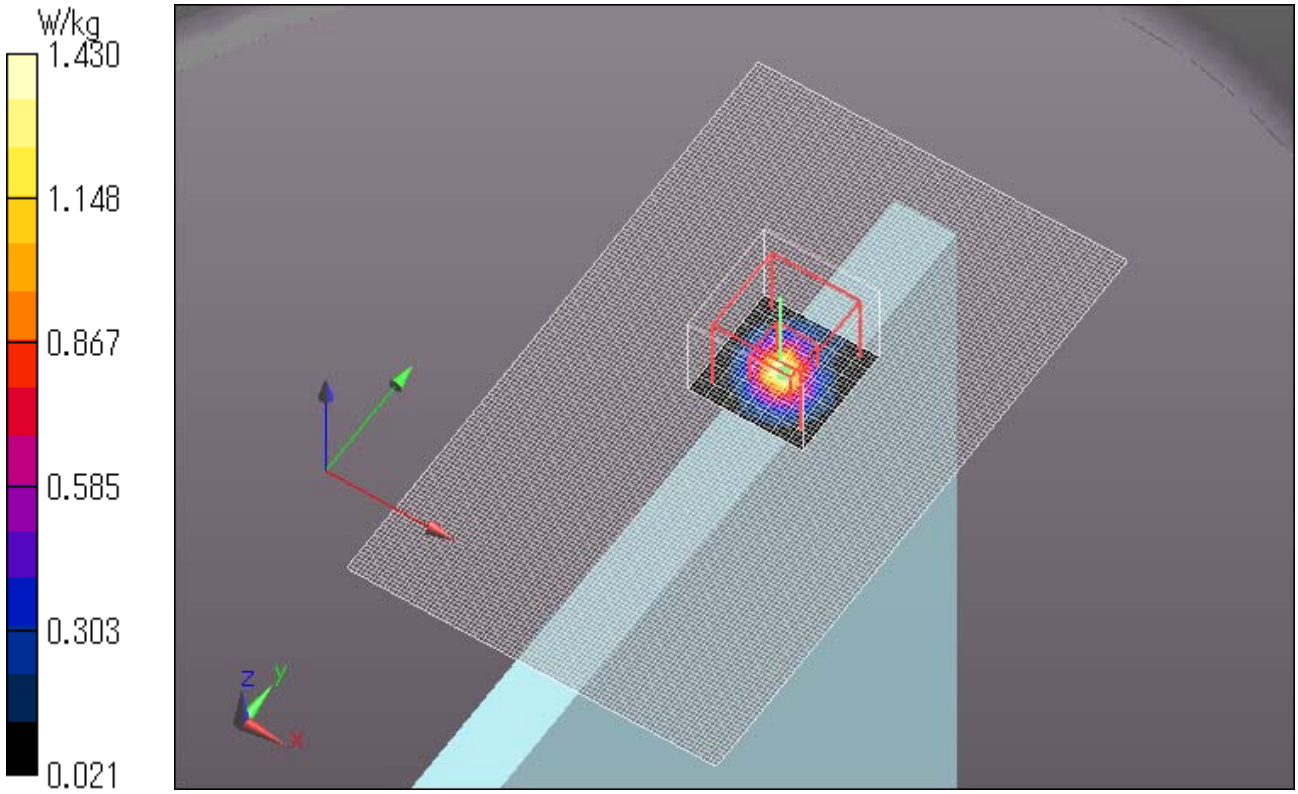

WLAN 11n20 MCS0 Main Ant Bottom 0mm 5745MHz
Communication System: UID 0, WLAN 11a/b/g/n (0); Communication System Band: 11a/n (W58); Frequency: 5745 MHz; Duty Cycle: 1:1
Medium parameters used: f = 5745 MHz; σ = 6.087 S/m; ε_r = 46.779; ρ = 1000 kg/m^3
Phantom section: Flat Section
Measurement Standard: DASY5 (IEEE/IEC/ANSI C63.19-2007)
DASY5 Configuration
Probe: EX3DV4 - SN3825; ConvF(4.05, 4.05, 4.05); Calibrated: 2013/12/13;
Sensor-Surface: 2mm (Mechanical Surface Detection)
Electronics: DAE4 Sn518; Calibrated: 2013/10/14
Phantom: ELI 4.0; Type: QDOVA001BB; Serial: 1045
Measurement SW: DASY52, Version 52.8 (8); SEMCAD X Version 14.6.10 (7331)

Area Scan (91x151x1): Interpolated grid: dx=1.000 mm, dy=1.000 mm
Maximum value of SAR (interpolated) = 0.834 W/kg

Zoom Scan (8x8x6)/Cube 0: Measurement grid: dx=4mm, dy=4mm, dz=2mm
Reference Value = 13.40 V/m; Power Drift = -0.16 dB
Peak SAR (extrapolated) = 2.12 W/kg
SAR(1 g) = 0.374 W/kg; SAR(10 g) = 0.087 W/kg
Maximum value of SAR (measured) = 0.923 W/kg

Date: 2014/07/30
Ambient Temp. : 24.0 degree.C. Liquid Temp.; 23.5 degree.C.

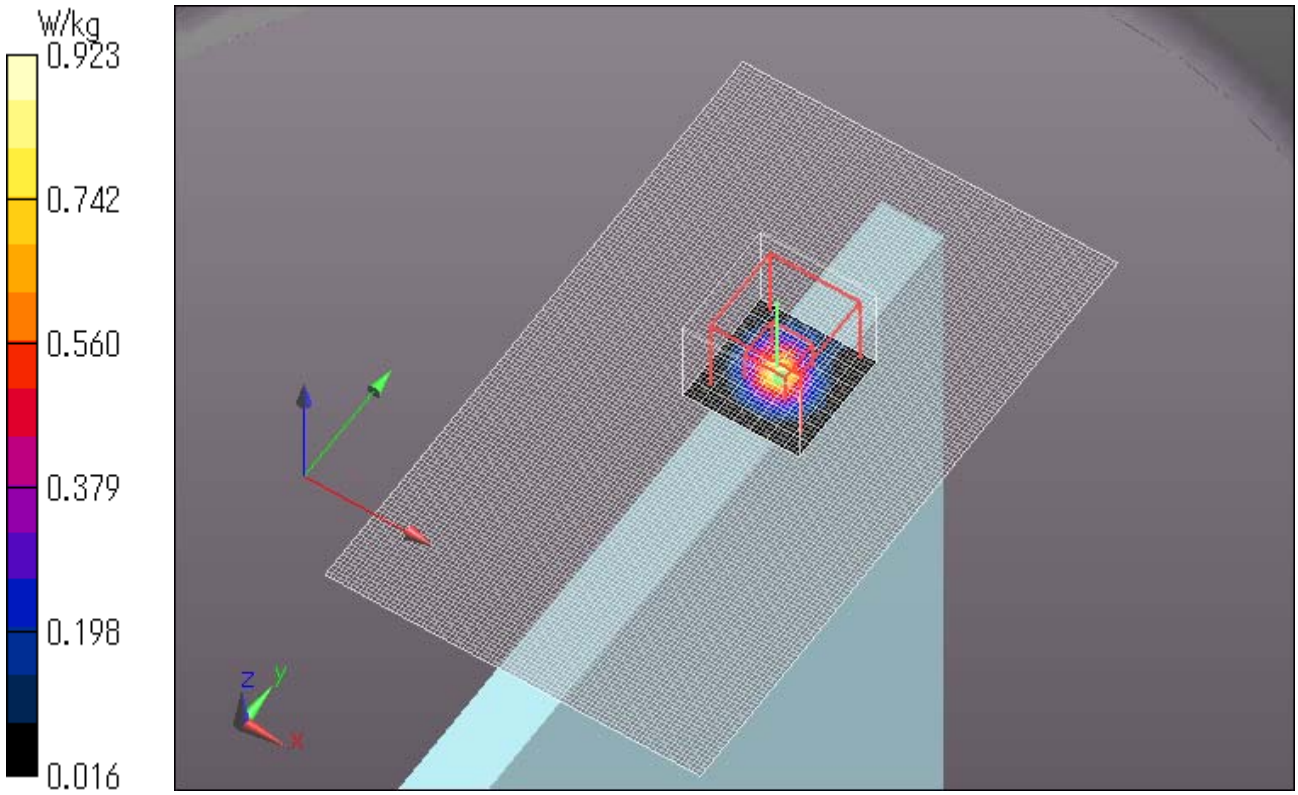

WLAN 11n20 MCS0 Main Ant Bottom 0mm 5805MHz
Communication System: UID 0, WLAN 11a/b/g/n (0); Communication System Band: 11a/n (W58); Frequency: 5805 MHz; Duty Cycle: 1:1
Medium parameters used: f = 5805 MHz; σ = 6.068 S/m; ε_r = 47.086; ρ = 1000 kg/m^3
Phantom section: Flat Section
Measurement Standard: DASY5 (IEEE/IEC/ANSI C63.19-2007)
DASY5 Configuration
Probe: EX3DV4 - SN3825; ConvF(4.05, 4.05, 4.05); Calibrated: 2013/12/13;
Sensor-Surface: 2mm (Mechanical Surface Detection)
Electronics: DAE4 Sn518; Calibrated: 2013/10/14
Phantom: ELI 4.0; Type: QDOVA001BB; Serial: 1045
Measurement SW: DASY52, Version 52.8 (8); SEMCAD X Version 14.6.10 (7331)

Area Scan (91x151x1): Interpolated grid: dx=1.000 mm, dy=1.000 mm
Maximum value of SAR (interpolated) = 1.40 W/kg

Zoom Scan (8x8x6)/Cube 0: Measurement grid: dx=4mm, dy=4mm, dz=2mm
Reference Value = 17.45 V/m; Power Drift = -0.07 dB
Peak SAR (extrapolated) = 3.76 W/kg
SAR(1 g) = 0.639 W/kg; SAR(10 g) = 0.140 W/kg
Maximum value of SAR (measured) = 1.61 W/kg

Date: 2014/07/30
Ambient Temp. : 24.0 degree.C. Liquid Temp.; 23.5 degree.C.

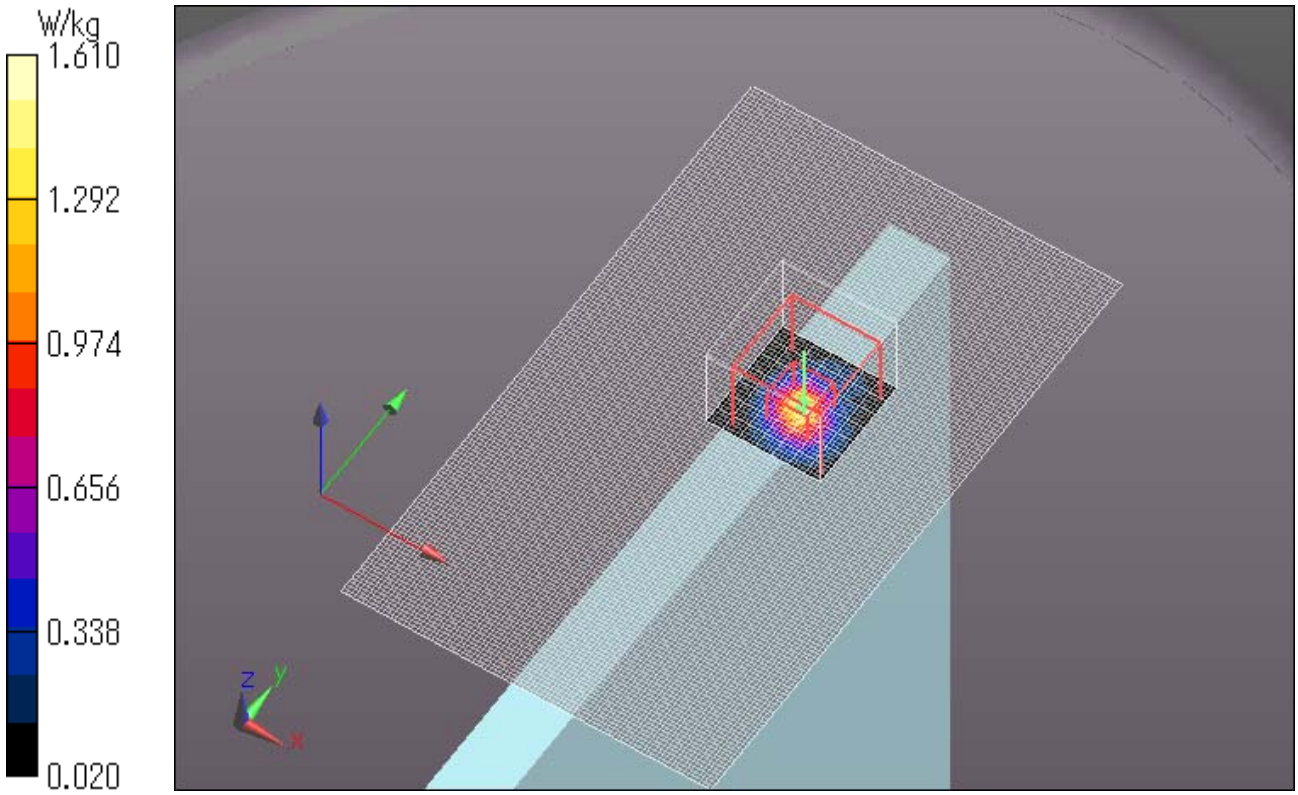

WLAN 11a 6Mbps Sub Ant Front 0mm 5825MHz
Communication System: UID 0, WLAN 11a/b/g/n (0); Communication System Band: 11a/n (W58); Frequency: 5825 MHz; Duty Cycle: 1:1
Medium parameters used: f = 5825 MHz; σ = 5.96 S/m; ε_r = 47.52; ρ = 1000 kg/m^3
Phantom section: Flat Section
Measurement Standard: DASY5 (IEEE/IEC/ANSI C63.19-2007)
DASY5 Configuration
Probe: EX3DV4 - SN3825; ConvF(4.05, 4.05, 4.05); Calibrated: 2013/12/13;
Sensor-Surface: 2mm (Mechanical Surface Detection)
Electronics: DAE4 Sn518; Calibrated: 2013/10/14
Phantom: ELI 4.0; Type: QDOVA001BB; Serial: 1045
Measurement SW: DASY52, Version 52.8 (8); SEMCAD X Version 14.6.10 (7331)

Area Scan (91x151x1): Interpolated grid: dx=1.000 mm, dy=1.000 mm
Maximum value of SAR (interpolated) = 0.181 W/kg

Zoom Scan (8x8x6)/Cube 0: Measurement grid: dx=4mm, dy=4mm, dz=2mm
Reference Value = 6.879 V/m; Power Drift = -0.15 dB
Peak SAR (extrapolated) = 0.459 W/kg
SAR(1 g) = 0.106 W/kg; SAR(10 g) = 0.040 W/kg
Maximum value of SAR (measured) = 0.219 W/kg

Date: 2014/07/31
Ambient Temp. : 24.0 degree.C. Liquid Temp.; 23.5 degree.C.

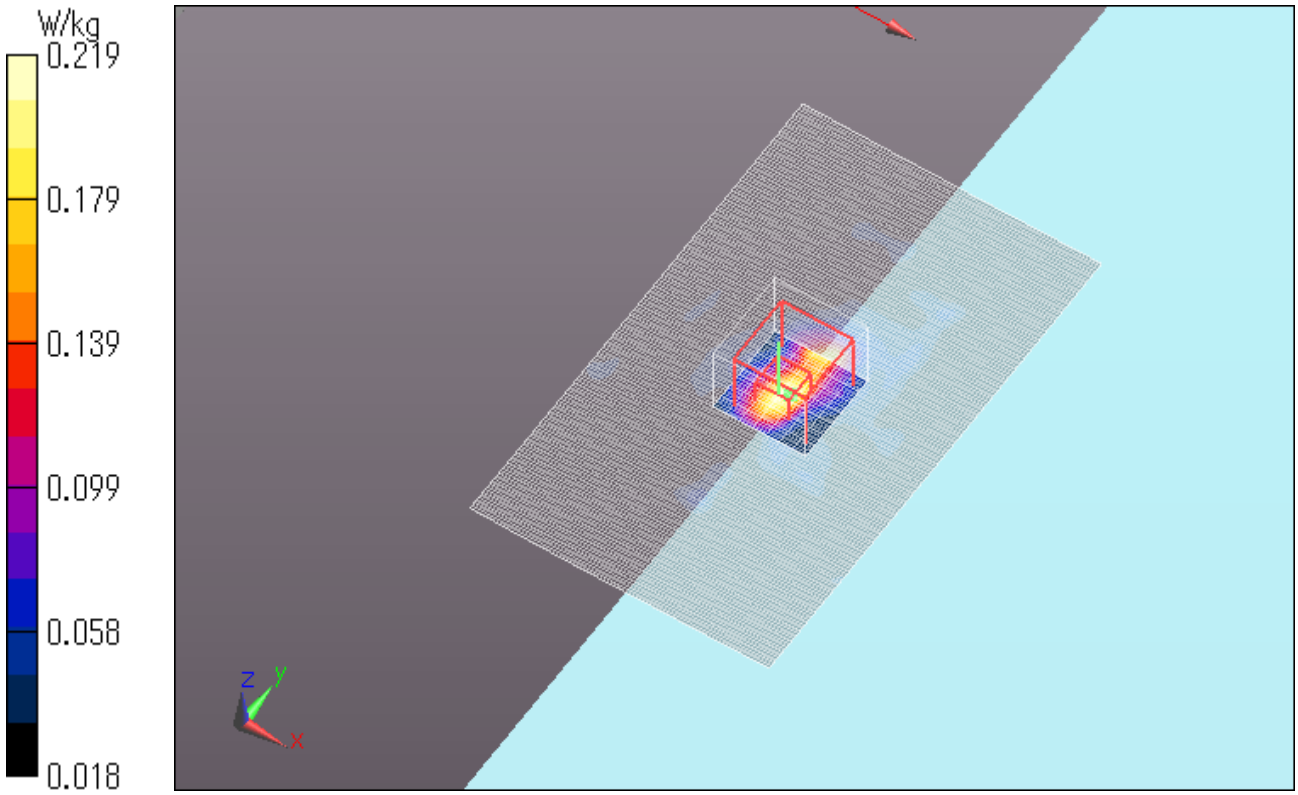

WLAN 11a 6Mbps Sub Ant Rear 0mm 5825MHz
Communication System: UID 0, WLAN 11a/b/g/n (0); Communication System Band: 11a/n (W58); Frequency: 5825 MHz; Duty Cycle: 1:1
Medium parameters used: f = 5825 MHz; σ = 5.96 S/m; ε_r = 47.52; ρ = 1000 kg/m^3
Phantom section: Flat Section
Measurement Standard: DASY5 (IEEE/IEC/ANSI C63.19-2007)
DASY5 Configuration
Probe: EX3DV4 - SN3825; ConvF(4.05, 4.05, 4.05); Calibrated: 2013/12/13;
Sensor-Surface: 2mm (Mechanical Surface Detection)
Electronics: DAE4 Sn518; Calibrated: 2013/10/14
Phantom: ELI 4.0; Type: QDOVA001BB; Serial: 1045
Measurement SW: DASY52, Version 52.8 (8); SEMCAD X Version 14.6.10 (7331)

Area Scan (91x151x1): Interpolated grid: dx=1.000 mm, dy=1.000 mm
Maximum value of SAR (interpolated) = 0.400 W/kg

Zoom Scan (8x8x6)/Cube 0: Measurement grid: dx=4mm, dy=4mm, dz=2mm
Reference Value = 8.655 V/m; Power Drift = -0.04 dB
Peak SAR (extrapolated) = 1.86 W/kg
SAR(1 g) = 0.177 W/kg; SAR(10 g) = 0.061 W/kg
Maximum value of SAR (measured) = 0.359 W/kg

Date: 2014/07/31
Ambient Temp. : 24.0 degree.C. Liquid Temp.; 23.5 degree.C.

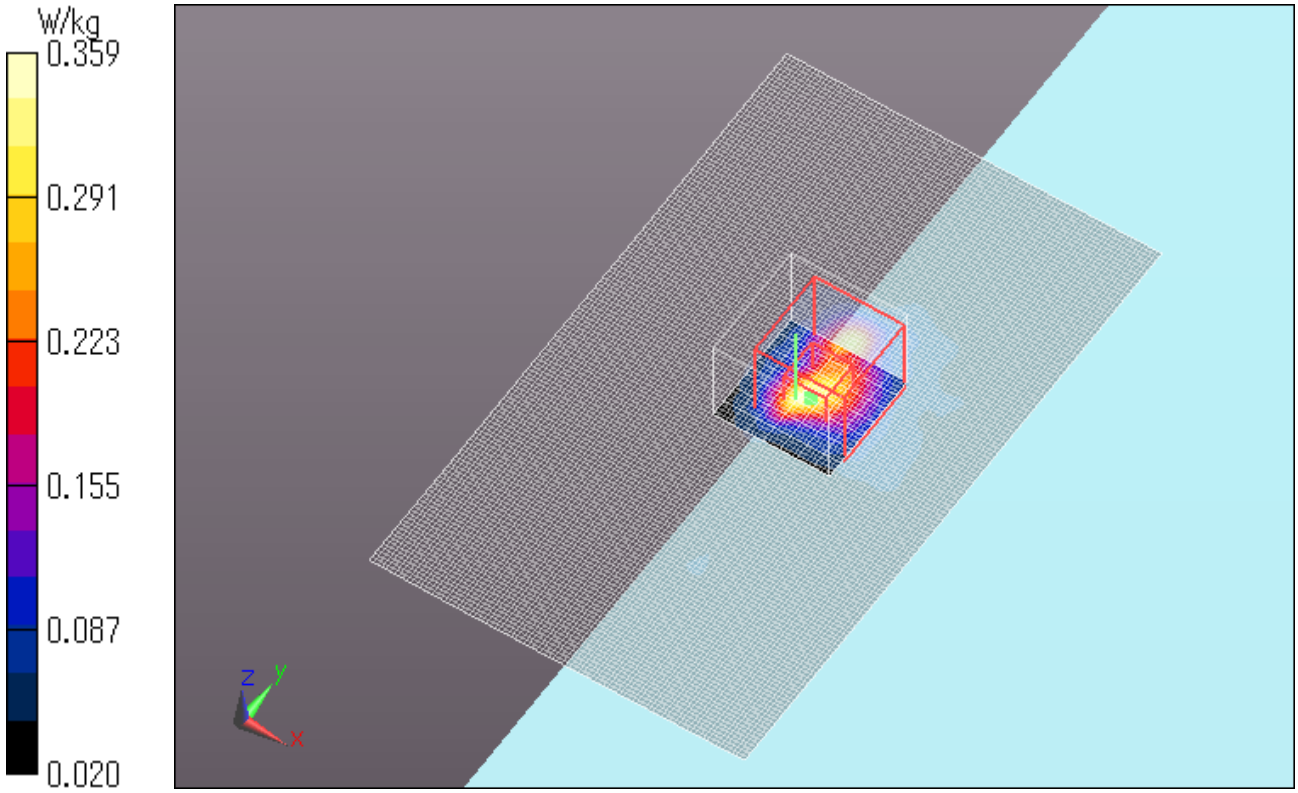

WLAN 11a 6Mbps Sub Ant Top 0mm 5825MHz
Communication System: UID 0, WLAN 11a/b/g/n (0); Communication System Band: 11a/n (W58); Frequency: 5825 MHz; Duty Cycle: 1:1
Medium parameters used: f = 5825 MHz; σ = 5.96 S/m; ε_r = 47.52; ρ = 1000 kg/m^3
Phantom section: Flat Section
Measurement Standard: DASY5 (IEEE/IEC/ANSI C63.19-2007)
DASY5 Configuration
Probe: EX3DV4 - SN3825; ConvF(4.05, 4.05, 4.05); Calibrated: 2013/12/13;
Sensor-Surface: 2mm (Mechanical Surface Detection)
Electronics: DAE4 Sn518; Calibrated: 2013/10/14
Phantom: ELI 4.0; Type: QDOVA001BB; Serial: 1045
Measurement SW: DASY52, Version 52.8 (8); SEMCAD X Version 14.6.10 (7331)

Area Scan (91x151x1): Interpolated grid: dx=1.000 mm, dy=1.000 mm
Maximum value of SAR (interpolated) = 1.38 W/kg

Zoom Scan (8x8x6)/Cube 0: Measurement grid: dx=4mm, dy=4mm, dz=2mm
Reference Value = 15.93 V/m; Power Drift = -0.14 dB
Peak SAR (extrapolated) = 2.95 W/kg
SAR(1 g) = 0.512 W/kg; SAR(10 g) = 0.126 W/kg
Maximum value of SAR (measured) = 1.24 W/kg

Date: 2014/07/31
Ambient Temp. : 24.0 degree.C. Liquid Temp.; 23.5 degree.C.

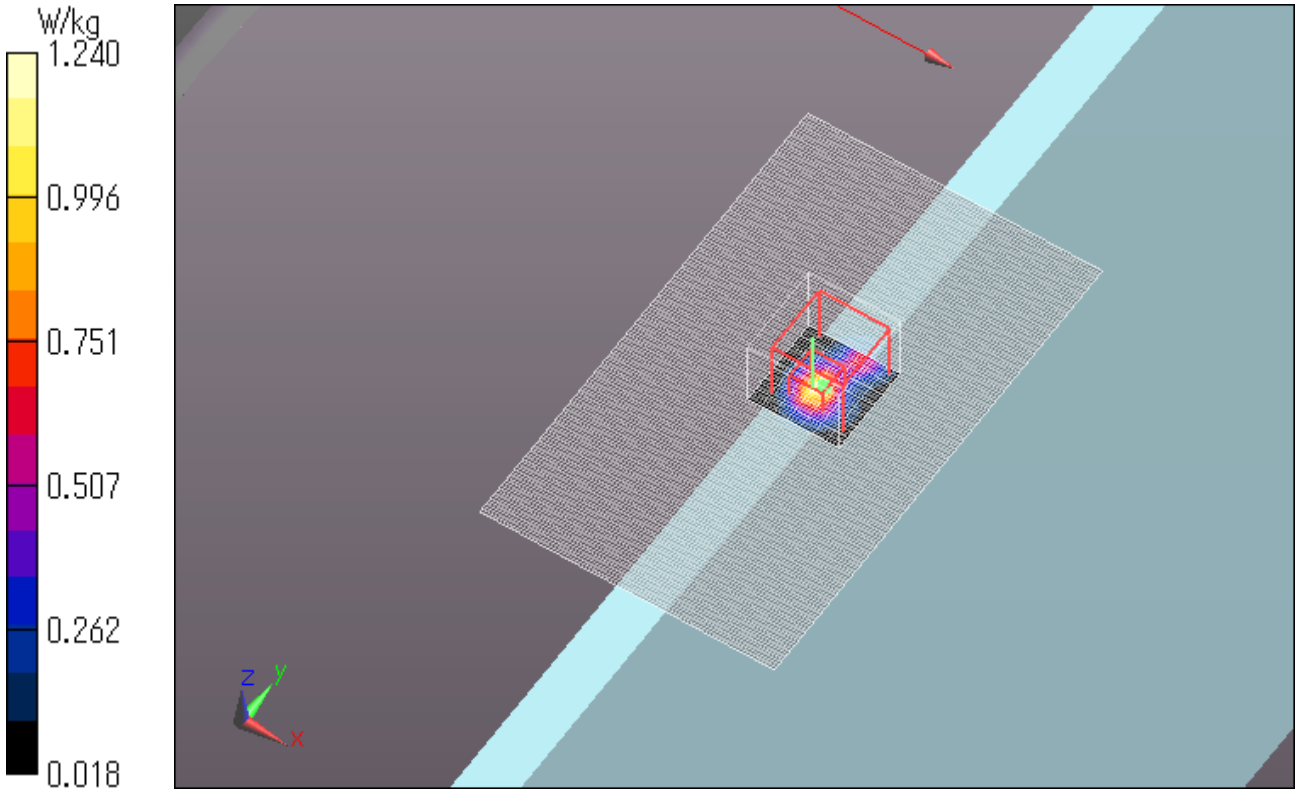

WLAN 11n20 MCS0 Sub Ant Top 0mm 5825MHz
Communication System: UID 0, WLAN 11a/b/g/n (0); Communication System Band: 11a/n (W58); Frequency: 5825 MHz; Duty Cycle: 1:1
Medium parameters used: f = 5825 MHz; σ = 5.96 S/m; ε_r = 47.52; ρ = 1000 kg/m^3
Phantom section: Flat Section
Measurement Standard: DASY5 (IEEE/IEC/ANSI C63.19-2007)
DASY5 Configuration
Probe: EX3DV4 - SN3825; ConvF(4.05, 4.05, 4.05); Calibrated: 2013/12/13;
Sensor-Surface: 2mm (Mechanical Surface Detection)
Electronics: DAE4 Sn518; Calibrated: 2013/10/14
Phantom: ELI 4.0; Type: QDOVA001BB; Serial: 1045
Measurement SW: DASY52, Version 52.8 (8); SEMCAD X Version 14.6.10 (7331)

Area Scan (91x151x1): Interpolated grid: dx=1.000 mm, dy=1.000 mm
Maximum value of SAR (interpolated) = 1.29 W/kg

Zoom Scan (8x8x6)/Cube 0: Measurement grid: dx=4mm, dy=4mm, dz=2mm
Reference Value = 16.01 V/m; Power Drift = -0.19 dB
Peak SAR (extrapolated) = 3.16 W/kg
SAR(1 g) = 0.489 W/kg; SAR(10 g) = 0.118 W/kg
Maximum value of SAR (measured) = 1.12 W/kg

Date: 2014/07/31
Ambient Temp. : 24.0 degree.C. Liquid Temp.; 23.5 degree.C.

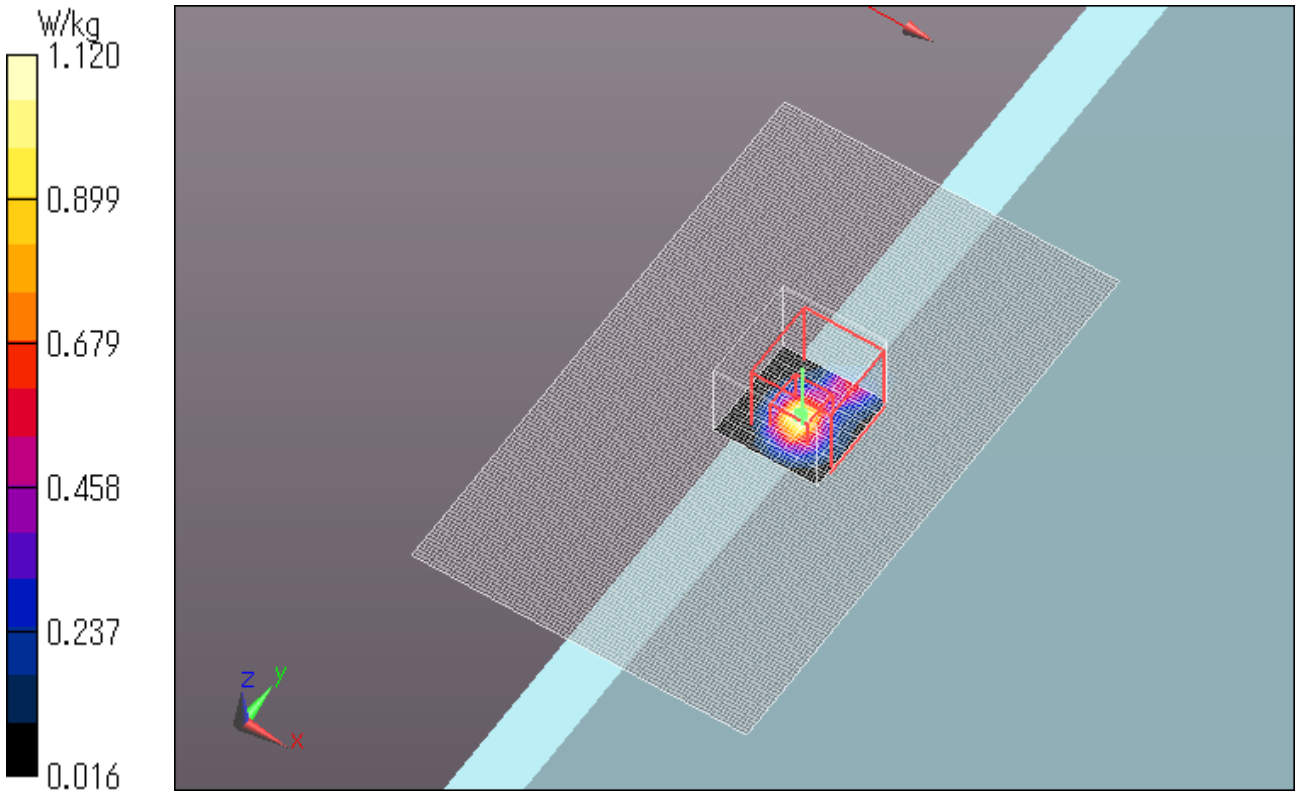

APPENDIX2 : System Check

1. System check result Body 2450MHz

(1) Simulated Tissue Liquid Parameter confirmation

DIELECTRIC PARAMETERS MEASUREMENT RESULTS											
Date	Ambient Temp. [deg.c]	Relative Humidity [%]	Liquid type	Liquid Temp. [deg.c]	Measured Frequency [MHz]	Parameters	Target Value	Measured	Deviation [%]	Limit [%]	Remark
1-Aug	24	42	MSL 2450	23.5	2450	εr	52.7	50.7	-3.8	+/-5	*1
						σ [mho/m]	1.95	2.02	3.6	+/-5	

εr: Relative Permittivity / σ : Coductivity
*1 The Target value is a parameter defined in KDB 865664D01.

DIELECTRIC PARAMETERS MEASUREMENT RESULTS											
Date	Ambient Temp. [deg.c]	Relative Humidity [%]	Liquid type	Liquid Temp. [deg.c]	Measured Frequency [MHz]	Parameters	Target Value	Measured	Deviation [%]	Limit [%]	Remark
1-Aug	24	42	MSL 2450	23.5	2450	εr	52.2	50.7	-2.9	+/-6	*2 *3
						σ [mho/m]	2.00	2.02	1.0	+/-6	

εr: Relative Permittivity / σ : Coductivity
*2 The target value is the calibrated dipole Body TSL parameters. (D2450V2 SN:713, Measured Body TSL parameters)
*3 The limit is for deviation provided by manufacture.

(2) SAR correction for deviations of complex permittivity from target

$\Delta SAR = c\varepsilon\ \Delta\varepsilon r + c\sigma\ \Delta\sigma$

<1g>

$C\varepsilon = -7.854\times10^{-4}f^3 + 9.402\times10^{-3}f^2 - 2.742\times10^{-2}f - 0.2026$

$C\sigma = 9.804\times10^{-3}f^3 - 8.661\times10^{-2}f^2 + 2.981\times10^{-2}f + 0.7829$

<10g>

$C\varepsilon = 3.456\times10^{-3}f^3 - 3.531\times10^{-2}f^2 + 7.675\times10^{-2}f - 0.1860$

$C\sigma = 4.479\times10^{-3}f^3 - 1.586\times10^{-2}f^2 - 0.1972f + 0.7717$

'f ' is the frequency in GHz.

The measured SAR results are corrected with target value of KDB865664D01.

Corrected SAR(1g) = Measured SAR(1g) x (100-⊿SAR)/100

Date		1-Aug
	f(GHz)=	2.45
	⊿εr(%)=	-3.8
	⊿σ(%)=	3.6
1g	Cε=	-0.2249
	Cσ=	0.4802
	⊿SAR(%)=	2.58
10g	Cε=	-0.1591
	Cσ=	0.2592
	⊿SAR(%)=	1.54

(3) System check result (for calibration by manufacture)

SYSTEM CHECK								
Date	Frequency [MHz]	SAR 1g [W/kg]						
		Forward Power 250mW		Conversion 1W	Target Value(1W)	Deviation [%]	Limit [%]	Remark
		Measured	⊿SAR corrected	Calculation				
1-Aug	2450.00	13.50	13.15	52.61	49.70	5.8	+/-10	*4

*4 The taget value is the parameter defined in SAR for nominal Body TSL parameters in manufacturer calibrated dipole (D5GHzV2 SN:1020)
Please refer to " SAR result with Body TSL of Appendix 2 2. System Check Dipole (D5GHzV2,S/N: 1020)".

Body 2450MHz System Check DATA / Dipole2450MHz / Forward Conducted Power : 250mW
Communication System: UID 0, CW (0); Communication System Band: D2450 (2450.0 MHz); Frequency: 2450 MHz; Duty Cycle: 1:1
Medium parameters used: f = 2450 MHz; σ = 2.02 S/m; ε_r = 50.71; ρ = 1000 kg/m^3
Phantom section: Flat Section
Measurement Standard: DASY5 (IEEE/IEC/ANSI C63.19-2007)
DASY5 Configuration
Probe: EX3DV4 - SN3922; ConvF(7.36, 7.36, 7.36); Calibrated: 2014/06/13;
Sensor-Surface: 2mm (Mechanical Surface Detection)
Electronics: DAE4 Sn1372; Calibrated: 2014/06/18
Phantom: ELI v5.0 TP1207; Type: QDOVA001BB; Serial: TP:1207
Measurement SW: DASY52, Version 52.8 (8); SEMCAD X Version 14.6.10 (7331)

Area Scan (61x81x1): Interpolated grid: dx=1.500 mm, dy=1.500 mm
Maximum value of SAR (interpolated) = 21.2 W/kg

Zoom Scan (7x7x7) (7x7x7)/Cube 0: Measurement grid: dx=5mm, dy=5mm, dz=5mm
Reference Value = 102.3 V/m; Power Drift = -0.03 dB
Peak SAR (extrapolated) = 28.2 W/kg
SAR(1 g) = 13.5 W/kg; SAR(10 g) = 6.24 W/kg
Maximum value of SAR (measured) = 20.5 W/kg

Date: 2014/08/01
Ambient Temp. : 24.0 degree.C. Liquid Temp.: 23.5 degree.C.

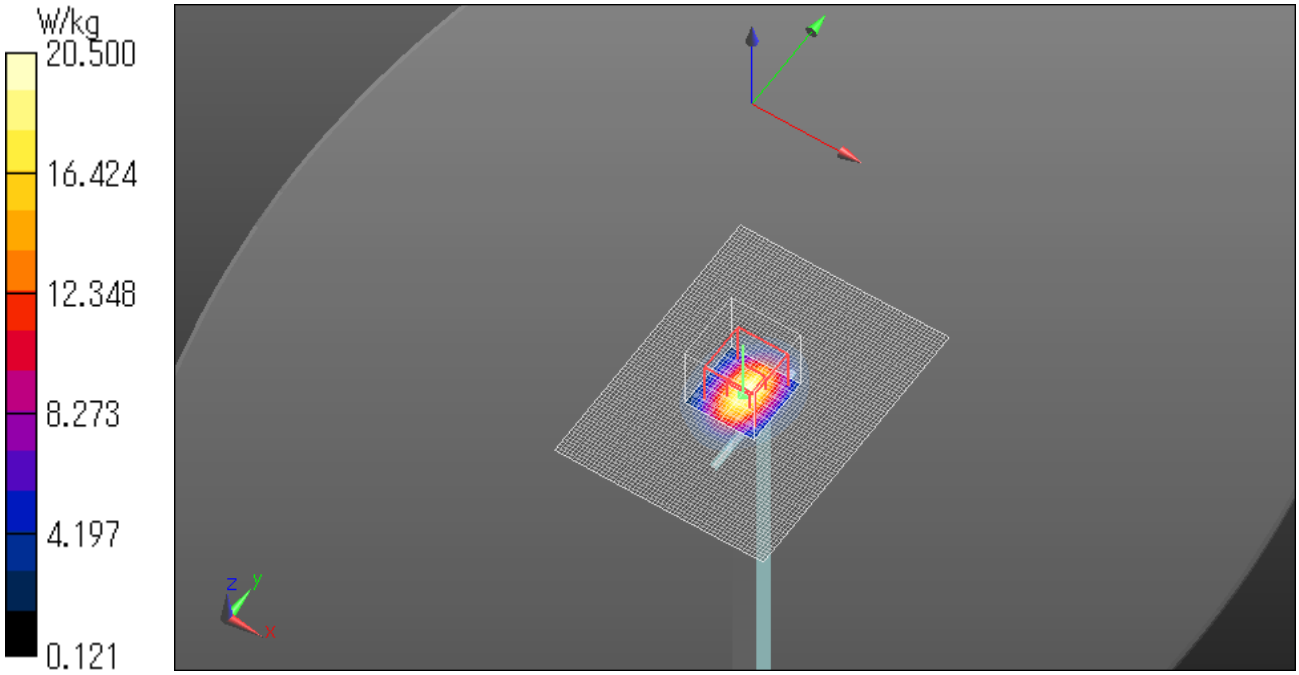

Body 2450MHz System Check DATA / Dipole2450MHz / Forward Conducted Power : 250mW
Communication System: UID 0, CW (0); Communication System Band: D2450 (2450.0 MHz); Frequency: 2450 MHz; Duty Cycle: 1:1
Medium parameters used: f = 2450 MHz; σ = 2.02 S/m; ε_r = 50.71; ρ = 1000 kg/m^3
Phantom section: Flat Section
Measurement Standard: DASY5 (IEEE/IEC/ANSI C63.19-2007)
DASY5 Configuration
Probe: EX3DV4 - SN3922; ConvF(7.36, 7.36, 7.36); Calibrated: 2014/06/13;
Sensor-Surface: 2mm (Mechanical Surface Detection)
Electronics: DAE4 Sn1372; Calibrated: 2014/06/18
Phantom: ELI v5.0 TP1207; Type: QDOVA001BB; Serial: TP:1207
Measurement SW: DASY52, Version 52.8 (8); SEMCAD X Version 14.6.10 (7331)

Z Scan (1x1x31): Measurement grid: dx=20mm, dy=20mm, dz=5mm
Maximum value of SAR (measured) = 12.8 W/kg
Date: 2014/08/01
Ambient Temp. : 24.0 degree.C. Liquid Temp.: 23.5 degree.C.

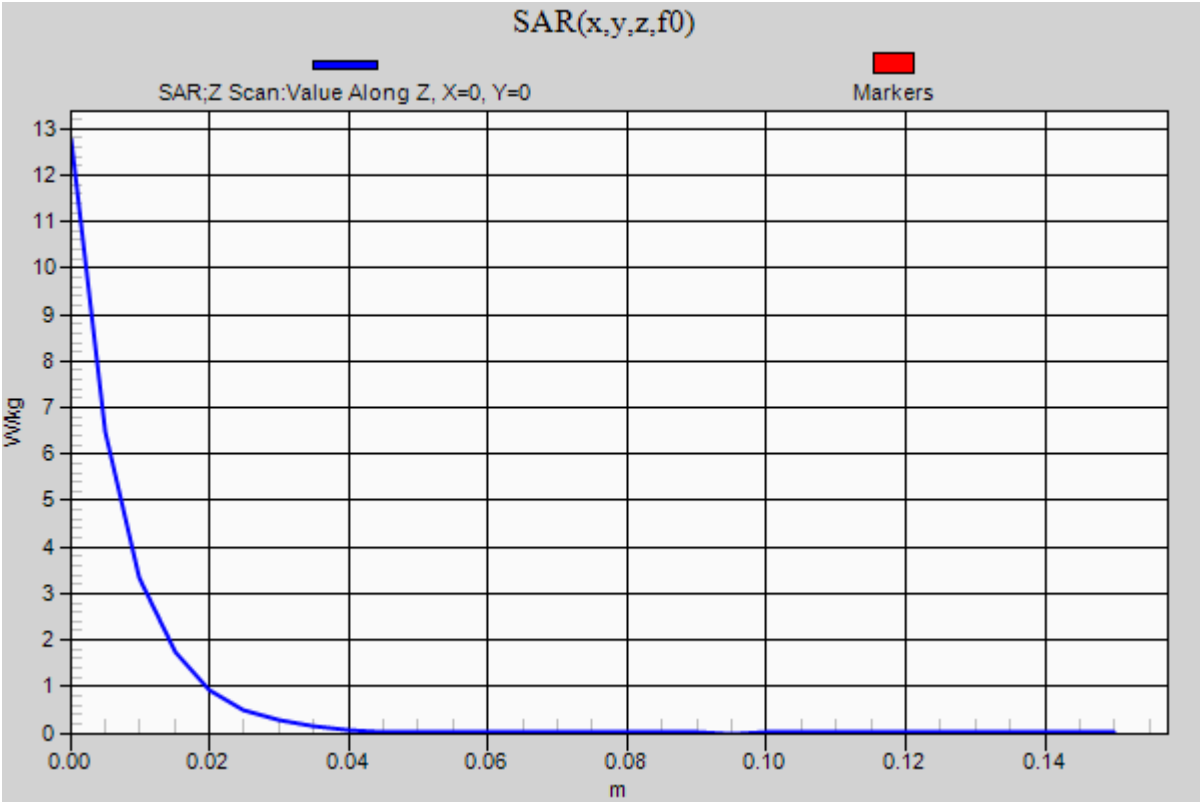

2. System Check Dipole (D2450V2,S/N:713)

Calibration Laboratory of
Schmid & Partner
Engineering AG
Zeughausstrasse 43, 8004 Zurich, Switzerland

S Schweizerischer Kalibrierdienst
C Service suisse d'étalonnage
Servizio svizzero di taratura
S Swiss Calibration Service

Accredited by the Swiss Accreditation Service (SAS)
The Swiss Accreditation Service is one of the signatories to the EA Multilateral Agreement for the recognition of calibration certificates

Accreditation No.: SCS 108

Client UL Japan (PTT)

Certificate No: D2450V2-713_Sep13

CALIBRATION CERTIFICATE

Object	D2450V2 - SN: 713
Calibration procedure(s)	QA CAL-05.v9 Calibration procedure for dipole validation kits above 700 MHz
Calibration date:	September 10, 2013

This calibration certificate documents the traceability to national standards, which realize the physical units of measurements (SI).
The measurements and the uncertainties with confidence probability are given on the following pages and are part of the certificate.

All calibrations have been conducted in the closed laboratory facility: environment temperature (22 ± 3)°C and humidity < 70%.

Calibration Equipment used (M&TE critical for calibration)

Primary Standards	ID #	Cal Date (Certificate No.)	Scheduled Calibration
Power meter EPM-442A	GB37480704	01-Nov-12 (No. 217-01640)	Oct-13
Power sensor HP 8481A	US37292783	01-Nov-12 (No. 217-01640)	Oct-13
Reference 20 dB Attenuator	SN: 5058 (20k)	04-Apr-13 (No. 217-01736)	Apr-14
Type-N mismatch combination	SN: 5047.3 / 06327	04-Apr-13 (No. 217-01739)	Apr-14
Reference Probe ES3DV3	SN: 3205	28-Dec-12 (No. ES3-3205_Dec12)	Dec-13
DAE4	SN: 601	25-Apr-13 (No. DAE4-601_Apr13)	Apr-14

Secondary Standards	ID #	Check Date (in house)	Scheduled Check
Power sensor HP 8481A	MY41092317	18-Oct-02 (in house check Oct-11)	In house check: Oct-13
RF generator R&S SMT-06	100005	04-Aug-99 (in house check Oct-11)	In house check: Oct-13
Network Analyzer HP 8753E	US37390585 S4206	18-Oct-01 (in house check Oct-12)	In house check: Oct-13

	Name	Function	Signature
Calibrated by:	Israe El-Naouq	Laboratory Technician	Israe El-Naouq
Approved by:	Katja Pokovic	Technical Manager	

Issued: September 10, 2013

This calibration certificate shall not be reproduced except in full without written approval of the laboratory.

Certificate No: D2450V2-713_Sep13 Page 1 of 8

Calibration Laboratory of
Schmid & Partner
Engineering AG
Zeughausstrasse 43, 8004 Zurich, Switzerland

S Schweizerischer Kalibrierdienst
C Service suisse d'étalonnage
Servizio svizzero di taratura
S Swiss Calibration Service

Accredited by the Swiss Accreditation Service (SAS)
The Swiss Accreditation Service is one of the signatories to the EA Multilateral Agreement for the recognition of calibration certificates

Accreditation No.: **SCS 108**

Glossary:

TSL	tissue simulating liquid
ConvF	sensitivity in TSL / NORM x,y,z
N/A	not applicable or not measured

Calibration is Performed According to the Following Standards:

a) IEEE Std 1528-2003, "IEEE Recommended Practice for Determining the Peak Spatial-Averaged Specific Absorption Rate (SAR) in the Human Head from Wireless Communications Devices: Measurement Techniques", December 2003
b) IEC 62209-1, "Procedure to measure the Specific Absorption Rate (SAR) for hand-held devices used in close proximity to the ear (frequency range of 300 MHz to 3 GHz)", February 2005
c) KDB 865664, "SAR Measurement Requirements for 100 MHz to 6 GHz"

Additional Documentation:

d) DASY4/5 System Handbook

Methods Applied and Interpretation of Parameters:

- *Measurement Conditions:* Further details are available from the Validation Report at the end of the certificate. All figures stated in the certificate are valid at the frequency indicated.
- *Antenna Parameters with TSL:* The dipole is mounted with the spacer to position its feed point exactly below the center marking of the flat phantom section, with the arms oriented parallel to the body axis.
- *Feed Point Impedance and Return Loss:* These parameters are measured with the dipole positioned under the liquid filled phantom. The impedance stated is transformed from the measurement at the SMA connector to the feed point. The Return Loss ensures low reflected power. No uncertainty required.
- *Electrical Delay:* One-way delay between the SMA connector and the antenna feed point. No uncertainty required.
- *SAR measured:* SAR measured at the stated antenna input power.
- *SAR normalized:* SAR as measured, normalized to an input power of 1 W at the antenna connector.
- *SAR for nominal TSL parameters:* The measured TSL parameters are used to calculate the nominal SAR result.

The reported uncertainty of measurement is stated as the standard uncertainty of measurement multiplied by the coverage factor k=2, which for a normal distribution corresponds to a coverage probability of approximately 95%.

Measurement Conditions

DASY system configuration, as far as not given on page 1.

DASY Version	DASY5	V52.8.7
Extrapolation	Advanced Extrapolation	
Phantom	Modular Flat Phantom	
Distance Dipole Center - TSL	10 mm	with Spacer
Zoom Scan Resolution	dx, dy, dz = 5 mm	
Frequency	2450 MHz ± 1 MHz	

Head TSL parameters

The following parameters and calculations were applied.

	Temperature	Permittivity	Conductivity
Nominal Head TSL parameters	22.0 °C	39.2	1.80 mho/m
Measured Head TSL parameters	(22.0 ± 0.2) °C	39.4 ± 6 %	1.83 mho/m ± 6 %
Head TSL temperature change during test	< 0.5 °C	----	----

SAR result with Head TSL

SAR averaged over 1 cm^3 (1 g) of Head TSL	Condition	
SAR measured	250 mW input power	13.0 W/kg
SAR for nominal Head TSL parameters	normalized to 1W	**51.6 W/kg ± 17.0 % (k=2)**

SAR averaged over 10 cm^3 (10 g) of Head TSL	condition	
SAR measured	250 mW input power	6.05 W/kg
SAR for nominal Head TSL parameters	normalized to 1W	**24.1 W/kg ± 16.5 % (k=2)**

Body TSL parameters

The following parameters and calculations were applied.

	Temperature	Permittivity	Conductivity
Nominal Body TSL parameters	22.0 °C	52.7	1.95 mho/m
Measured Body TSL parameters	(22.0 ± 0.2) °C	52.2 ± 6 %	2.00 mho/m ± 6 %
Body TSL temperature change during test	< 0.5 °C	----	----

SAR result with Body TSL

SAR averaged over 1 cm^3 (1 g) of Body TSL	Condition	
SAR measured	250 mW input power	12.6 W/kg
SAR for nominal Body TSL parameters	normalized to 1W	**49.7 W/kg ± 17.0 % (k=2)**

SAR averaged over 10 cm^3 (10 g) of Body TSL	condition	
SAR measured	250 mW input power	5.89 W/kg
SAR for nominal Body TSL parameters	normalized to 1W	**23.4 W/kg ± 16.5 % (k=2)**

Appendix

Antenna Parameters with Head TSL

Impedance, transformed to feed point	51.8 Ω + 0.7 jΩ
Return Loss	- 34.4 dB

Antenna Parameters with Body TSL

Impedance, transformed to feed point	48.7 Ω + 2.8 jΩ
Return Loss	- 30.0 dB

General Antenna Parameters and Design

Electrical Delay (one direction)	1.162 ns

After long term use with 100W radiated power, only a slight warming of the dipole near the feedpoint can be measured.

The dipole is made of standard semirigid coaxial cable. The center conductor of the feeding line is directly connected to the second arm of the dipole. The antenna is therefore short-circuited for DC-signals. On some of the dipoles, small end caps are added to the dipole arms in order to improve matching when loaded according to the position as explained in the "Measurement Conditions" paragraph. The SAR data are not affected by this change. The overall dipole length is still according to the Standard.
No excessive force must be applied to the dipole arms, because they might bend or the soldered connections near the feedpoint may be damaged.

Additional EUT Data

Manufactured by	SPEAG
Manufactured on	July 05, 2002

DASY5 Validation Report for Head TSL

Date: 10.09.2013

Test Laboratory: SPEAG, Zurich, Switzerland

DUT: Dipole 2450 MHz; Type: D2450V2; Serial: D2450V2 - SN: 713

Communication System: UID 0 - CW; Frequency: 2450 MHz
Medium parameters used: f = 2450 MHz; σ = 1.83 S/m; ε_r = 39.4; ρ = 1000 kg/m^3
Phantom section: Flat Section
Measurement Standard: DASY5 (IEEE/IEC/ANSI C63.19-2007)

DASY52 Configuration:

- Probe: ES3DV3 - SN3205; ConvF(4.52, 4.52, 4.52); Calibrated: 28.12.2012;
- Sensor-Surface: 3mm (Mechanical Surface Detection)
- Electronics: DAE4 Sn601; Calibrated: 25.04.2013
- Phantom: Flat Phantom 5.0 (front); Type: QD000P50AA; Serial: 1001
- DASY52 52.8.7(1137); SEMCAD X 14.6.10(7164)

Dipole Calibration for Head Tissue/Pin=250 mW, d=10mm/Zoom Scan (7x7x7)/Cube 0:

Measurement grid: dx=5mm, dy=5mm, dz=5mm
Reference Value = 94.095 V/m; Power Drift = 0.04 dB
Peak SAR (extrapolated) = 26.7 W/kg
SAR(1 g) = 13 W/kg; SAR(10 g) = 6.05 W/kg
Maximum value of SAR (measured) = 17.0 W/kg

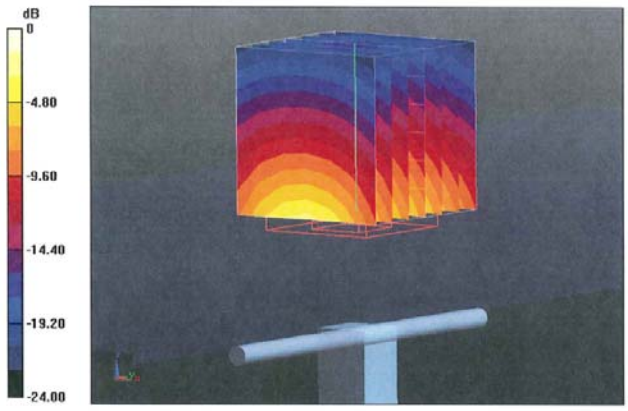

0 dB = 17.0 W/kg = 12.30 dBW/kg

Impedance Measurement Plot for Head TSL

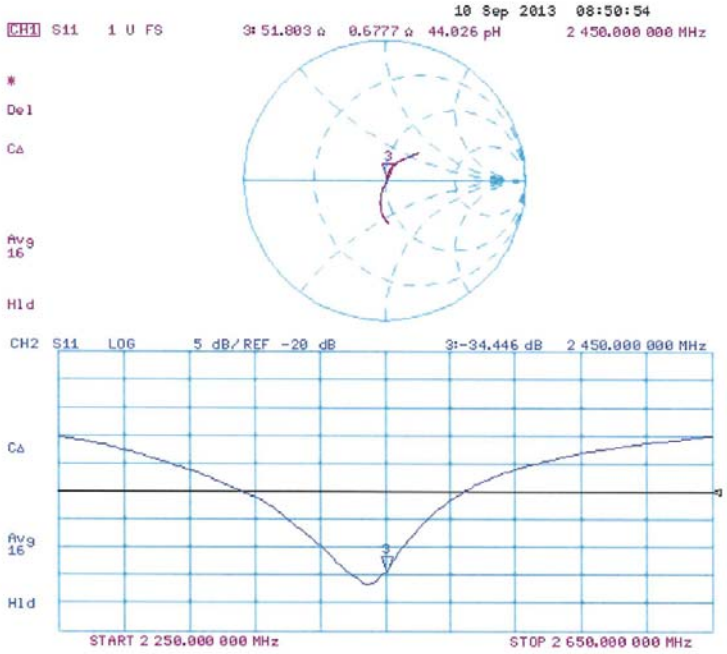

DASY5 Validation Report for Body TSL

Date: 10.09.2013

Test Laboratory: SPEAG, Zurich, Switzerland

DUT: Dipole 2450 MHz; Type: D2450V2; Serial: D2450V2 - SN: 713

Communication System: UID 0 - CW; Frequency: 2450 MHz
Medium parameters used: f = 2450 MHz; σ = 2 S/m; ε_r = 52.2; ρ = 1000 kg/m^3
Phantom section: Flat Section
Measurement Standard: DASY5 (IEEE/IEC/ANSI C63.19-2007)

DASY52 Configuration:

- Probe: ES3DV3 - SN3205; ConvF(4.42, 4.42, 4.42); Calibrated: 28.12.2012;
- Sensor-Surface: 3mm (Mechanical Surface Detection)
- Electronics: DAE4 Sn601; Calibrated: 25.04.2013
- Phantom: Flat Phantom 5.0 (back); Type: QD000P50AA; Serial: 1002
- DASY52 52.8.7(1137); SEMCAD X 14.6.10(7164)

Dipole Calibration for Body Tissue/Pin=250 mW, d=10mm/Zoom Scan (7x7x7)/Cube 0:
Measurement grid: dx=5mm, dy=5mm, dz=5mm
Reference Value = 94.095 V/m; Power Drift = 0.03 dB
Peak SAR (extrapolated) = 26.1 W/kg
SAR(1 g) = 12.6 W/kg; SAR(10 g) = 5.89 W/kg
Maximum value of SAR (measured) = 16.7 W/kg

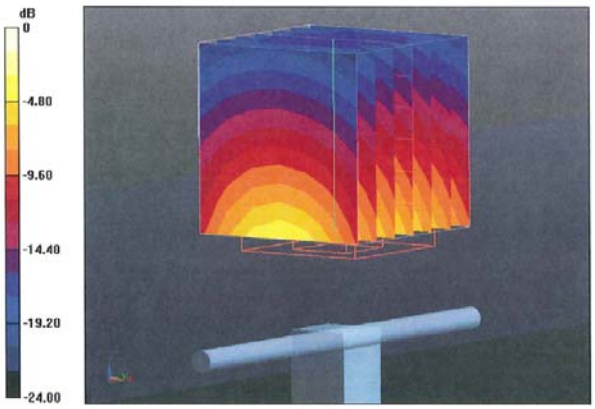

0 dB = 16.7 W/kg = 12.23 dBW/kg

Impedance Measurement Plot for Body TSL

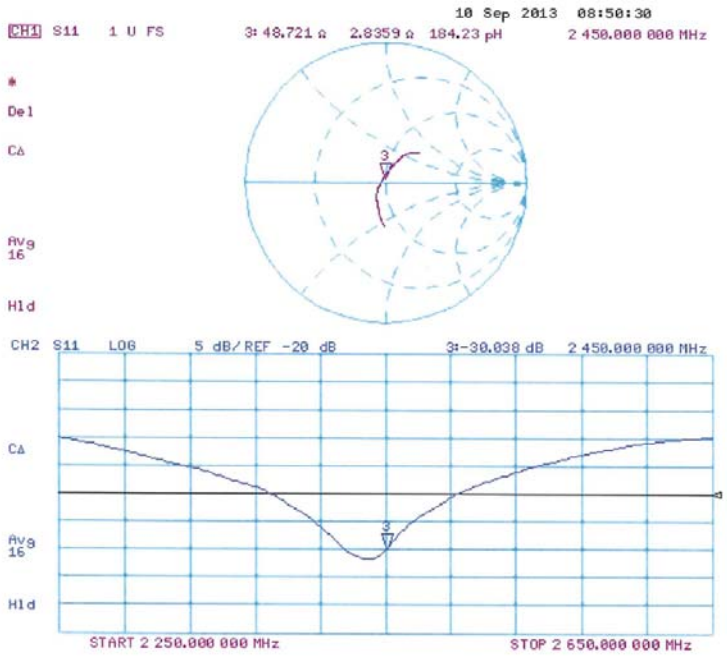

3. System check result Body 5200MHz

(1) Simulated Tissue Liquid Parameter confirmation

DIELECTRIC PARAMETERS MEASUREMENT RESULTS											
Date	Ambient Temp. [deg.c]	Relative Humidity [%]	Liquid type	Liquid Temp. [deg.c]	Measured Frequency [MHz]	Parameters	Target Value	Measured	Deviation [%]	Limit [%]	Remark
-	-	-	-	-	3000	εr	52.0	-	-	-	*1
						σ [mho/m]	2.73	-	-	-	
24-Jul	24	50	MBBL 3.5-5.8	23.5	5200	εr	49.0	48.0	-2.0	+/-5	*2
						σ [mho/m]	5.30	5.19	-2.0	+/-5	
-	-	-	-	-	5800	εr	48.2	-	-	-	*1
						σ [mho/m]	6.00	-	-	-	

εr: Relative Permittivity / σ : Coductivity
*1 The Target value is a parameter defined in KDB 865664D01.
*2 The dielectric parameters should be linearly interpolated between the closest pair of target frequencies to determine the applicable dielectric parameters corresponding to the device test frequency.

DIELECTRIC PARAMETERS MEASUREMENT RESULTS											
Date	Ambient Temp. [deg.c]	Relative Humidity [%]	Liquid type	Liquid Temp. [deg.c]	Measured Frequency [MHz]	Parameters	Target Value	Measured	Deviation [%]	Limit [%]	Remark
24-Jul	24	50	MBBL 3.5-5.8	23.5	5200	εr	47.3	48.0	1.5	+/-6	*3*4
						σ [mho/m]	5.44	5.19	-4.5	+/-6	

εr: Relative Permittivity / σ : Coductivity
*3 The target value is the calibrated dipole Body TSL parameters. (D5GHzV2 SN:1020, Measured Body TSL parameters)
*4 The limit is for deviation provided by manufacture.

(2) SAR correction for deviations of complex permittivity from target

The measured SAR results are corrected with target value of KDB865664D01.
Corrected SAR(1g) = Measured SAR(1g) x (100-⊿SAR)/100

$\Delta SAR = c\varepsilon\ \Delta\varepsilon r + c\sigma\ \Delta\sigma$
<1g>
$C\varepsilon = -7.854\times10^{-4}f^3 + 9.402\times10^{-3}f^2 - 2.742\times10^{-2}f - 0.2026$
$C\sigma = 9.804\times10^{-3}f^3 - 8.661\times10^{-2}f^2 + 2.981\times10^{-2}f + 0.7829$
<10g>
$C\varepsilon = 3.456\times10^{-3}f^3 - 3.531\times10^{-2}f^2 + 7.675\times10^{-2}f - 0.1860$
$C\sigma = 4.479\times10^{-3}f^3 - 1.586\times10^{-2}f^2 - 0.1972f + 0.7717$
'f ' is the frequency in GHz.

Date		24-Jul
	f(GHz)=	5.2
	⊿εr(%)=	-2.0
	⊿σ(%)=	-2.0
1g	Cε=	-0.2014
	Cσ=	-0.0255
	⊿SAR(%)=	0.45
10g	Cε=	-0.2557
	Cσ=	-0.0528
	⊿SAR(%)=	0.62

(3) System check result (for calibration by manufacture)

SYSTEM CHECK								
Date	Frequency [MHz]	SAR 1g [W/kg]						
		Forward Power 100mW		Conversion 1W	Target Value(1W)	Deviation [%]	Limit [%]	Remark
		Measured	⊿SAR corrected	Calculation				
24-Jul	5200.00	7.68	7.65	76.45	75.80	0.9	+/-10	*5

*5 The taget value is the parameter defined in SAR for nominal Body TSL parameters in manufacturer calibrated dipole (D5GHzV2 SN:1020)
Please refer to " SAR result with Body TSL of Appendix 2 2. System Check Dipole (D5GHzV2,S/N: 1020)".

Body 5200MHz System Check DATA / Dipole5GHz / Forward Conducted Power : 100mW
Communication System: UID 0, CW (0); Communication System Band: D5GHz (5000.0 - 6000.0 MHz); Frequency: 5200 MHz; Duty Cycle: 1:1
Medium parameters used: f = 5200 MHz; σ = 5.193 S/m; ε_r = 48.009; ρ = 1000 kg/m^3
Phantom section: Flat Section
Measurement Standard: DASY5 (IEEE/IEC/ANSI C63.19-2007)
DASY5 Configuration
Probe: EX3DV4 - SN3825; ConvF(4.38, 4.38, 4.38); Calibrated: 2013/12/13;
Sensor-Surface: 2mm (Mechanical Surface Detection)
Electronics: DAE4 Sn518; Calibrated: 2013/10/14
Phantom: ELI 4.0; Type: QDOVA001BB; Serial: 1045
Measurement SW: DASY52, Version 52.8 (7); SEMCAD X Version 14.6.10 (7164)

Area Scan (91x91x1): Interpolated grid: dx=1.000 mm, dy=1.000 mm
Maximum value of SAR (interpolated) = 16.2 W/kg

Zoom Scan (8x8x6)/Cube 0: Measurement grid: dx=4mm, dy=4mm, dz=2mm
Reference Value = 61.005 V/m; Power Drift = -0.05 dB
Peak SAR (extrapolated) = 29.0 W/kg
SAR(1 g) = 7.68 W/kg; SAR(10 g) = 2.17 W/kg
Maximum value of SAR (measured) = 14.9 W/kg

Date: 2014/07/24
Ambient Temp. : 24.0 degree.C. Liquid Temp.; 23.5 degree.C.

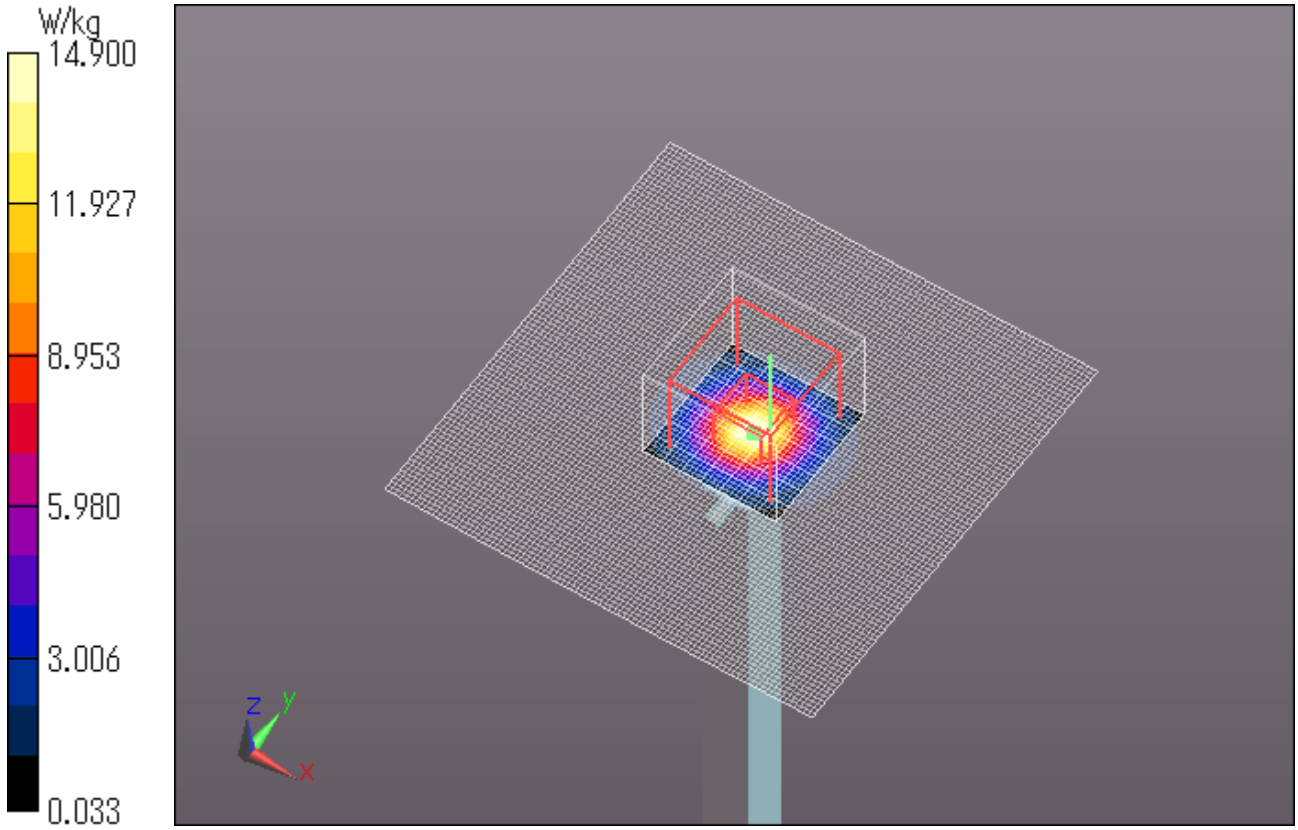

Body 5200MHz System Check DATA / Dipole5GHz / Forward Conducted Power : 100mW
Communication System: UID 0, CW (0); Communication System Band: D5GHz (5000.0 - 6000.0 MHz); Frequency: 5200 MHz; Duty Cycle: 1:1
Medium parameters used: f = 5200 MHz; σ = 5.193 S/m; ε_r = 48.009; ρ = 1000 kg/m^3
Phantom section: Flat Section
Measurement Standard: DASY5 (IEEE/IEC/ANSI C63.19-2007)
DASY5 Configuration
Probe: EX3DV4 - SN3825; ConvF(4.38, 4.38, 4.38); Calibrated: 2013/12/13;
Sensor-Surface: 0mm (Fix Surface)
Electronics: DAE4 Sn518; Calibrated: 2013/10/14
Phantom: ELI 4.0; Type: QDOVA001BB; Serial: 1045
Measurement SW: DASY52, Version 52.8 (7); SEMCAD X Version 14.6.10 (7331)

Z Scan (1x1x31): Measurement grid: dx=20mm, dy=20mm, dz=5mm
Maximum value of SAR (measured) = 13.1 W/kg

Date: 2014/07/25
Ambient Temp. : 24.0 degree.C. Liquid Temp.; 23.5 degree.C.

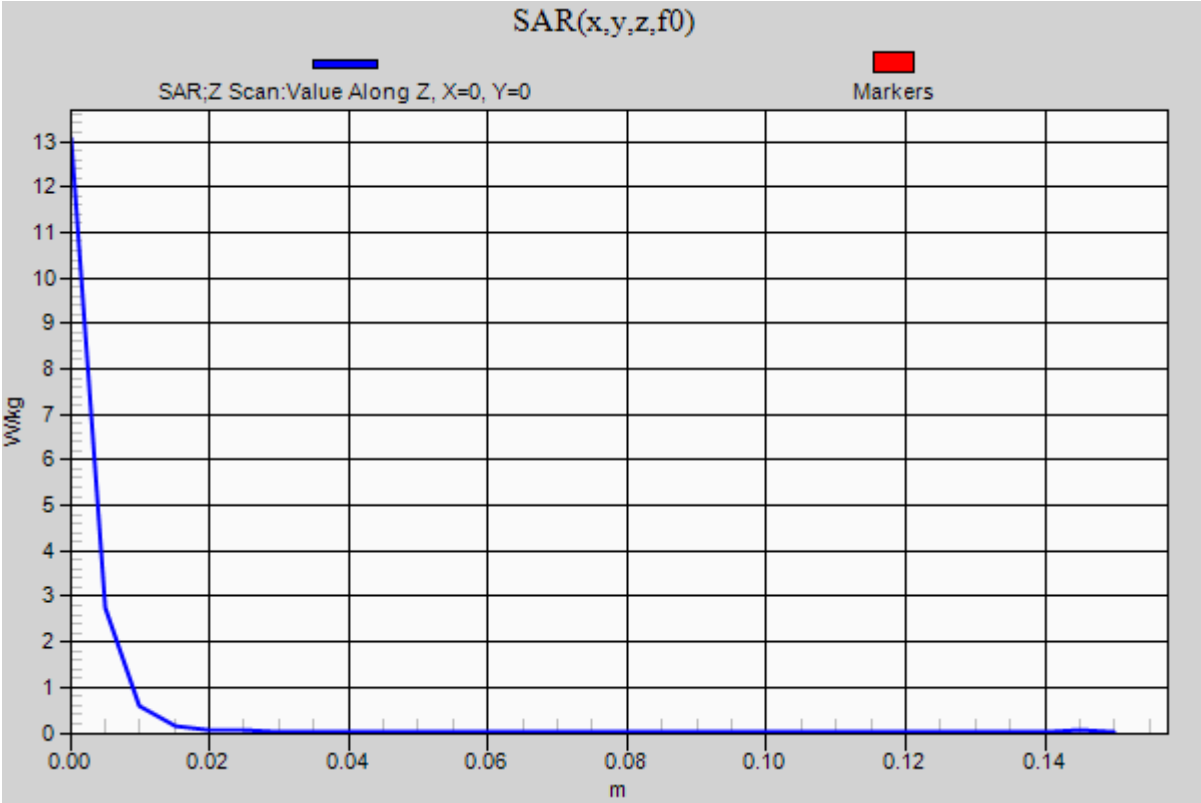

4. System check result Body 5300MHz

(2) Simulated Tissue Liquid Parameter confirmation

DIELECTRIC PARAMETERS MEASUREMENT RESULTS											
Date	Ambient Temp. [deg.c]	Relative Humidity [%]	Liquid type	Liquid Temp. [deg.c]	Measured Frequency [MHz]	Parameters	Target Value	Measured	Deviation [%]	Limit [%]	Remark
-	-	-	-	-	3000	εr	52.0	-	-	-	*1
						σ [mho/m]	2.73	-	-	-	
25-Jul	24	50	MBBL 3.5-5.8	23.5	5300	εr	48.9	48.0	-1.8	+/-5	*2
						σ [mho/m]	5.42	5.46	0.8	+/-5	
-	-	-	-	-	5800	εr	48.2	-	-	-	*1
						σ [mho/m]	6.00	-	-	-	

εr: Relative Permittivity / σ : Coductivity
*1 The Target value is a parameter defined in KDB 865664D01.
*2 The dielectric parameters should be linearly interpolated between the closest pair of target frequencies to determine the applicable dielectric parameters corresponding to the device test frequency.

DIELECTRIC PARAMETERS MEASUREMENT RESULTS											
Date	Ambient Temp. [deg.c]	Relative Humidity [%]	Liquid type	Liquid Temp. [deg.c]	Measured Frequency [MHz]	Parameters	Target Value	Measured	Deviation [%]	Limit [%]	Remark
25-Jul	24	50	MBBL 3.5-5.8	23.5	5300	εr	47.2	48.0	1.7	+/-6	*3*4
						σ [mho/m]	5.57	5.46	-1.9	+/-6	

εr: Relative Permittivity / σ : Coductivity
*3 The target value is the calibrated dipole Body TSL parameters. (D5GHzV2 SN:1020, Measured Body TSL parameters)
*4 The limit is for deviation provided by manufacture.

(2) SAR correction for deviations of complex permittivity from target

The measured SAR results are corrected with target value of KDB865664D01.
Corrected SAR(1g) = Measured SAR(1g) x (100-⊿SAR)/100

$\Delta SAR = c\varepsilon\ \Delta\varepsilon r + c\sigma\ \Delta\sigma$
<1g>
$C\varepsilon = -7.854\times10^{-4}f^3 + 9.402\times10^{-3}f^2 - 2.742\times10^{-2}f - 0.2026$
$C\sigma = 9.804\times10^{-3}f^3 - 8.661\times10^{-2}f^2 + 2.981\times10^{-2}f + 0.7829$
<10g>
$C\varepsilon = 3.456\times10^{-3}f^3 - 3.531\times10^{-2}f^2 + 7.675\times10^{-2}f - 0.1860$
$C\sigma = 4.479\times10^{-3}f^3 - 1.586\times10^{-2}f^2 - 0.1972f + 0.7717$
'f ' is the frequency in GHz.

Date		25-Jul
	f(GHz)=	5.3
	⊿εr(%)=	-1.8
	⊿σ(%)=	0.8
1g	Cε=	-0.2008
	Cσ=	-0.0324
	⊿SAR(%)=	0.34
10g	Cε=	-0.2566
	Cσ=	-0.0521
	⊿SAR(%)=	0.42

(3) System check result (for calibration by manufacture)

SYSTEM CHECK								
Date	Frequency [MHz]	SAR 1g [W/kg]						
		Forward Power 100mW		Conversion 1W	Target Value(1W)	Deviation [%]	Limit [%]	Remark
		Measured	⊿SAR corrected	Calculation				
25-Jul	5300.00	7.07	7.05	70.46	75.80	-7.0	+/-10	*5

*5 The taget value is the parameter defined in SAR for nominal Body TSL parameters in manufacturer calibrated dipole (D5GHzV2 SN:1020)
Please refer to " SAR result with Body TSL of Appendix 2 2. System Check Dipole (D5GHzV2,S/N: 1020)".

Body 5300MHz System Check DATA / Dipole5GHz / Forward Conducted Power : 100mW
Communication System: UID 0, CW (0); Communication System Band: D5GHz (5000.0 - 6000.0 MHz); Frequency: 5300 MHz; Duty Cycle: 1:1
Medium parameters used: f = 5300 MHz; σ = 5.462 S/m; ε_r = 48.02; ρ = 1000 kg/m^3
Phantom section: Flat Section
Measurement Standard: DASY5 (IEEE/IEC/ANSI C63.19-2007)
DASY5 Configuration
Probe: EX3DV4 - SN3825; ConvF(4.23, 4.23, 4.23); Calibrated: 2013/12/13;
Sensor-Surface: 2mm (Mechanical Surface Detection)
Electronics: DAE4 Sn518; Calibrated: 2013/10/14
Phantom: ELI 4.0; Type: QDOVA001BB; Serial: 1045
Measurement SW: DASY52, Version 52.8 (7); SEMCAD X Version 14.6.10 (7164)

Area Scan (91x91x1): Interpolated grid: dx=1.000 mm, dy=1.000 mm
Maximum value of SAR (interpolated) = 14.2 W/kg

Zoom Scan (8x8x6)/Cube 0: Measurement grid: dx=4mm, dy=4mm, dz=2mm
Reference Value = 55.395 V/m; Power Drift = -0.01 dB
Peak SAR (extrapolated) = 27.8 W/kg
SAR(1 g) = 7.07 W/kg; SAR(10 g) = 1.98 W/kg
Maximum value of SAR (measured) = 13.8 W/kg

Date: 2014/07/25
Ambient Temp. : 24.0 degree.C. Liquid Temp.; 23.5 degree.C.

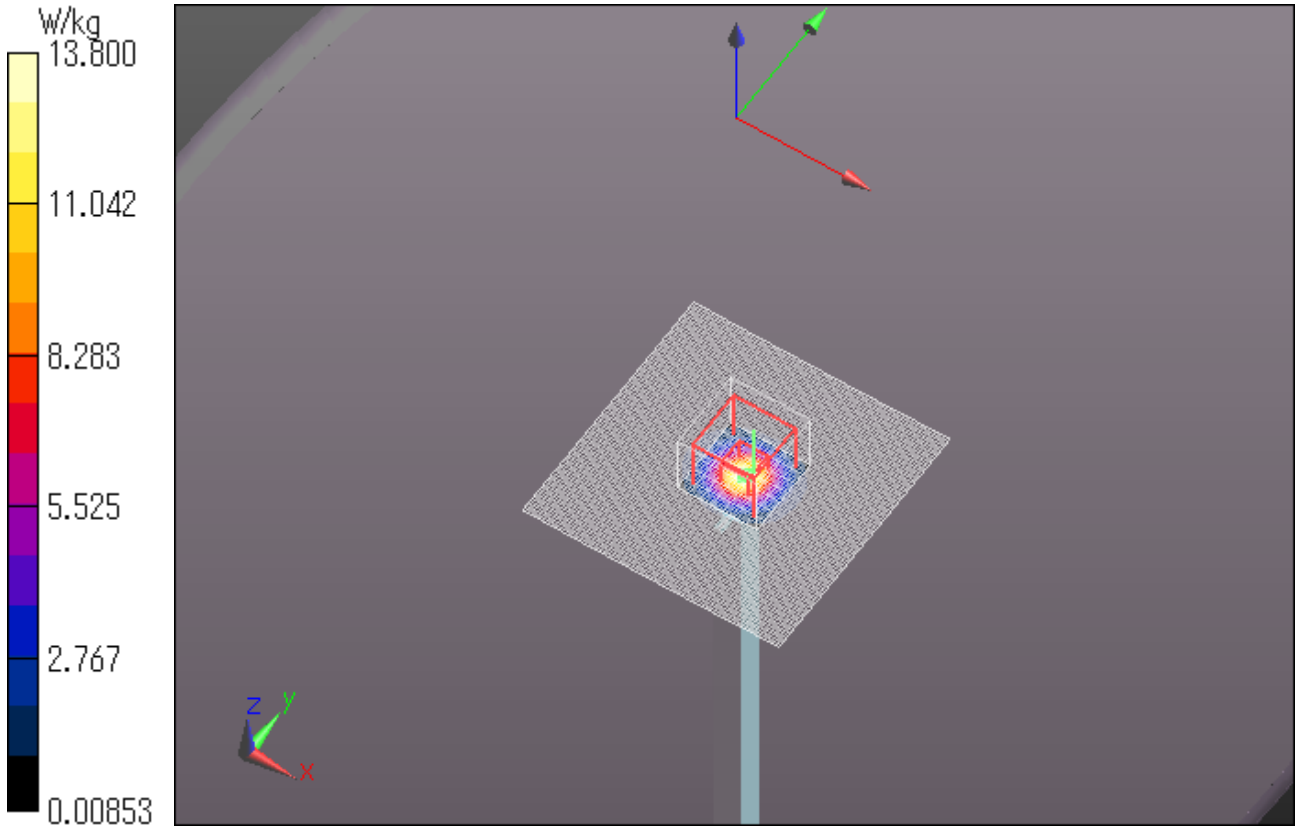

Body 5300MHz System Check DATA / Dipole5GHz / Forward Conducted Power : 100mW
Communication System: UID 0, CW (0); Communication System Band: D5GHz (5000.0 - 6000.0 MHz); Frequency: 5300 MHz; Duty Cycle: 1:1
Medium parameters used: f = 5300 MHz; σ = 5.462 S/m; ε_r = 48.02; ρ = 1000 kg/m^3
Phantom section: Flat Section
Measurement Standard: DASY5 (IEEE/IEC/ANSI C63.19-2007)
DASY5 Configuration
Probe: EX3DV4 - SN3825; ConvF(4.23, 4.23, 4.23); Calibrated: 2013/12/13;
Sensor-Surface: 0mm (Fix Surface)
Electronics: DAE4 Sn518; Calibrated: 2013/10/14
Phantom: ELI 4.0; Type: QDOVA001BB; Serial: 1045
Measurement SW: DASY52, Version 52.8 (7); SEMCAD X Version 14.6.10 (7331)

Z Scan (1x1x31): Measurement grid: dx=20mm, dy=20mm, dz=5mm
Maximum value of SAR (measured) = 11.1 W/kg

Date: 2014/07/25
Ambient Temp. : 24.0 degree.C. Liquid Temp.; 23.5 degree.C.

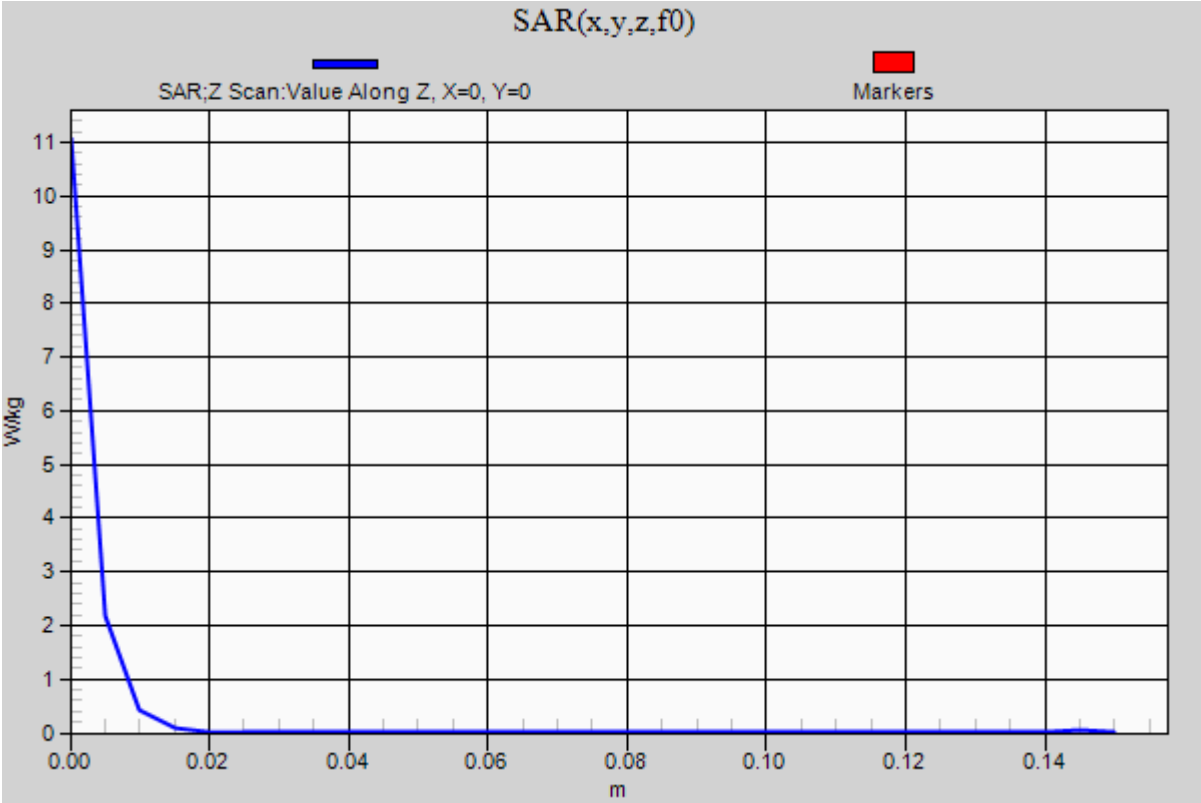

5. System check result Body 5600MHz

(1) Simulated Tissue Liquid Parameter confirmation

DIELECTRIC PARAMETERS MEASUREMENT RESULTS											
Date	Ambient Temp. [deg.c]	Relative Humidity [%]	Liquid type	Liquid Temp. [deg.c]	Measured Frequency [MHz]	Parameters	Target Value	Measured	Deviation [%]	Limit [%]	Remark
-	-	-	-	-	3000	εr	52.0	-	-	-	*1
						σ [mho/m]	2.73	-	-	-	
25-Jul	24	50	MBBL 3.5-5.8	23.5	5600	εr	48.5	47.3	-2.5	+/-5	*2
						σ [mho/m]	5.77	5.67	-1.7	+/-5	
27-Jul	24	61	MBBL 3.5-5.8	23.5	5600	εr	48.5	47.5	-2.1	+/-5	*2
						σ [mho/m]	5.77	5.87	1.7	+/-5	
28-Jul	24	57	MBBL 3.5-5.8	23.5	5600	εr	48.5	47.4	-2.2	+/-5	*2
						σ [mho/m]	5.77	5.73	-0.7	+/-5	
-	-	-	-	-	5800	εr	48.2	-	-	-	*1
						σ [mho/m]	6.00	-	-	-	

DIELECTRIC PARAMETERS MEASUREMENT RESULTS											
Date	Ambient Temp. [deg.c]	Relative Humidity [%]	Liquid type	Liquid Temp. [deg.c]	Measured Frequency [MHz]	Parameters	Target Value	Measured	Deviation [%]	Limit [%]	Remark
25-Jul	24	50	MBBL 3.5-5.8	23.5	5600	εr	46.6	47.3	1.5	+/-6	*3*4
						σ [mho/m]	5.98	5.67	-5.2	+/-6	
27-Jul	24	61	MBBL 3.5-5.8	23.5	5600	εr	46.6	47.5	1.9	+/-6	*3*4
						σ [mho/m]	5.98	5.87	-1.8	+/-6	
28-Jul	24	57	MBBL 3.5-5.8	23.5	5600	εr	46.6	47.4	1.8	+/-6	*3*4
						σ [mho/m]	5.98	5.73	-4.2	+/-6	

εr: Relative Permittivity / σ : Coductivity
*3 The target value is the calibrated dipole Body TSL parameters. (D5GHzV2 SN:1020, Measured Body TSL parameters)
*4 The limit is for deviation provided by manufacture.

(2) SAR correction for deviations of complex permittivity from target

The measured SAR results are corrected with target value of KDB865664D01.
Corrected SAR(1g) = Measured SAR(1g) x (100-⊿SAR)/100

Date		25-Jul	27-Jul	28-Jul
	f(GHz)=	5.6	5.6	5.6
	⊿εr(%)=	-2.5	-2.10	-2.20
	⊿σ(%)=	-1.7	1.70	-0.70
1g	Cε=	-0.1992	-0.1992	-0.1992
	Cσ=	-0.0445	-0.0445	-0.0445
	⊿SAR(%)=	0.57	0.34	0.47
10g	Cε=	-0.2566	-0.2566	-0.2566
	Cσ=	-0.0434	-0.0434	-0.0434
	⊿SAR(%)=	0.72	0.47	0.59

$\Delta SAR = c\varepsilon\ \Delta\varepsilon r + c\sigma\ \Delta\sigma$
<1g>
$C\varepsilon = -7.854\times10^{-4}f^3 + 9.402\times10^{-3}f^2 - 2.742\times10^{-2}f - 0.2026$
$C\sigma = 9.804\times10^{-3}f^3 - 8.661\times10^{-2}f^2 + 2.981\times10^{-2}f + 0.7829$
<10g>
$C\varepsilon = 3.456\times10^{-3}f^3 - 3.531\times10^{-2}f^2 + 7.675\times10^{-2}f - 0.1860$
$C\sigma = 4.479\times10^{-3}f^3 - 1.586\times10^{-2}f^2 - 0.1972f + 0.7717$
'f ' is the frequency in GHz.

(3) System check result (for calibration by manufacture)

SYSTEM CHECK								
Date	Frequency [MHz]	SAR 1g [W/kg]			Target Value(1W)	Deviation [%]	Limit [%]	Remark
		Forward Power 100mW		Conversion 1W				
		Measured	⊿SAR corrected	Calculation				
25-Jul	5600.00	8.19	8.14	81.43	80.30	1.4	+/-10	*5
27-Jul	5600.00	8.08	8.05	80.80	80.30	0.6	+/-10	*5
28-Jul	5600.00	7.96	7.92	79.60	80.30	-0.9	+/-10	*5

*5 The taget value is the parameter defined in SAR for nominal Body TSL parameters in manufacturer calibrated dipole (D5GHzV2 SN:1020)
Please refer to " SAR result with Body TSL of Appendix 2 2. System Check Dipole (D5GHzV2,S/N: 1020)".

Body 5600MHz System Check DATA / Dipole5GHz / Forward Conducted Power : 100mW
Communication System: UID 0, CW (0); Communication System Band: D5GHz (5000.0 - 6000.0 MHz); Frequency: 5600 MHz; Duty Cycle: 1:1
Medium parameters used: f = 5600 MHz; σ = 5.674 S/m; ε_r = 47.311; ρ = 1000 kg/m^3
Phantom section: Flat Section
Measurement Standard: DASY5 (IEEE/IEC/ANSI C63.19-2007)
DASY5 Configuration
Probe: EX3DV4 - SN3825; ConvF(3.9, 3.9, 3.9); Calibrated: 2013/12/13;
Sensor-Surface: 2mm (Mechanical Surface Detection)
Electronics: DAE4 Sn518; Calibrated: 2013/10/14
Phantom: ELI 4.0; Type: QDOVA001BB; Serial: 1045
Measurement SW: DASY52, Version 52.8 (7); SEMCAD X Version 14.6.10 (7331)

Area Scan (91x91x1): Interpolated grid: dx=1.000 mm, dy=1.000 mm
Maximum value of SAR (interpolated) = 16.5 W/kg

Zoom Scan (8x8x6)/Cube 0: Measurement grid: dx=4mm, dy=4mm, dz=2mm
Reference Value = 58.26 V/m; Power Drift = -0.06 dB
Peak SAR (extrapolated) = 34.9 W/kg
SAR(1 g) = 8.19 W/kg; SAR(10 g) = 2.23 W/kg
Maximum value of SAR (measured) = 16.3 W/kg

Date: 2014/07/25
Ambient Temp. : 24.0 degree.C. Liquid Temp.; 23.5 degree.C.

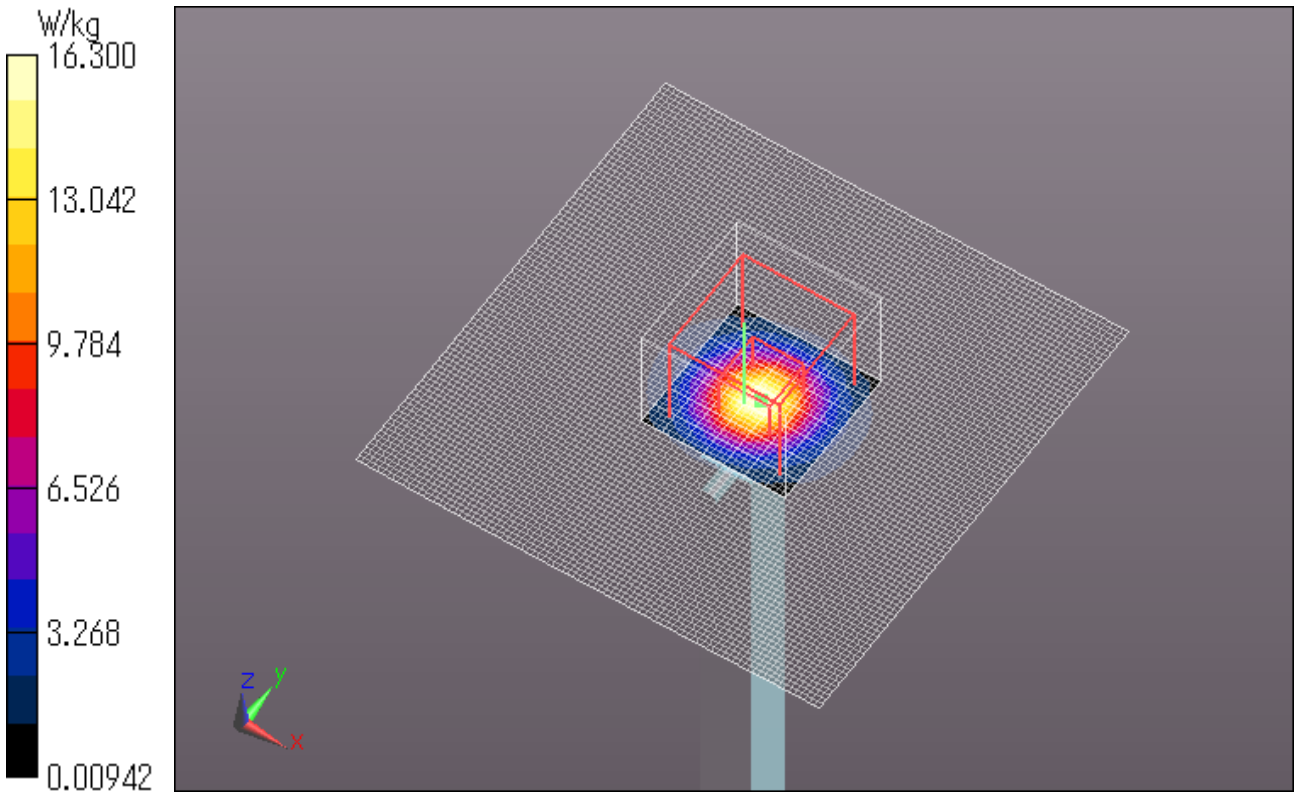

Body 5600MHz System Check DATA / Dipole5GHz / Forward Conducted Power : 100mW

Communication System: UID 0, CW (0); Communication System Band: D5GHz (5000.0 - 6000.0 MHz); Frequency: 5600 MHz; Duty Cycle: 1:1
Medium parameters used: f = 5600 MHz; σ = 5.674 S/m; ε_r = 47.311; ρ = 1000 kg/m^3
Phantom section: Flat Section
Measurement Standard: DASY5 (IEEE/IEC/ANSI C63.19-2007)
DASY5 Configuration
Probe: EX3DV4 - SN3825; ConvF(3.9, 3.9, 3.9); Calibrated: 2013/12/13;
Sensor-Surface: 0mm (Fix Surface)
Electronics: DAE4 Sn518; Calibrated: 2013/10/14
Phantom: ELI 4.0; Type: QDOVA001BB; Serial: 1045
Measurement SW: DASY52, Version 52.8 (7); SEMCAD X Version 14.6.10 (7331)

Z Scan (1x1x31): Measurement grid: dx=20mm, dy=20mm, dz=5mm
Maximum value of SAR (measured) = 12.6 W/kg

Date: 2014/07/25
Ambient Temp. : 24.0 degree.C. Liquid Temp.; 23.5 degree.C.

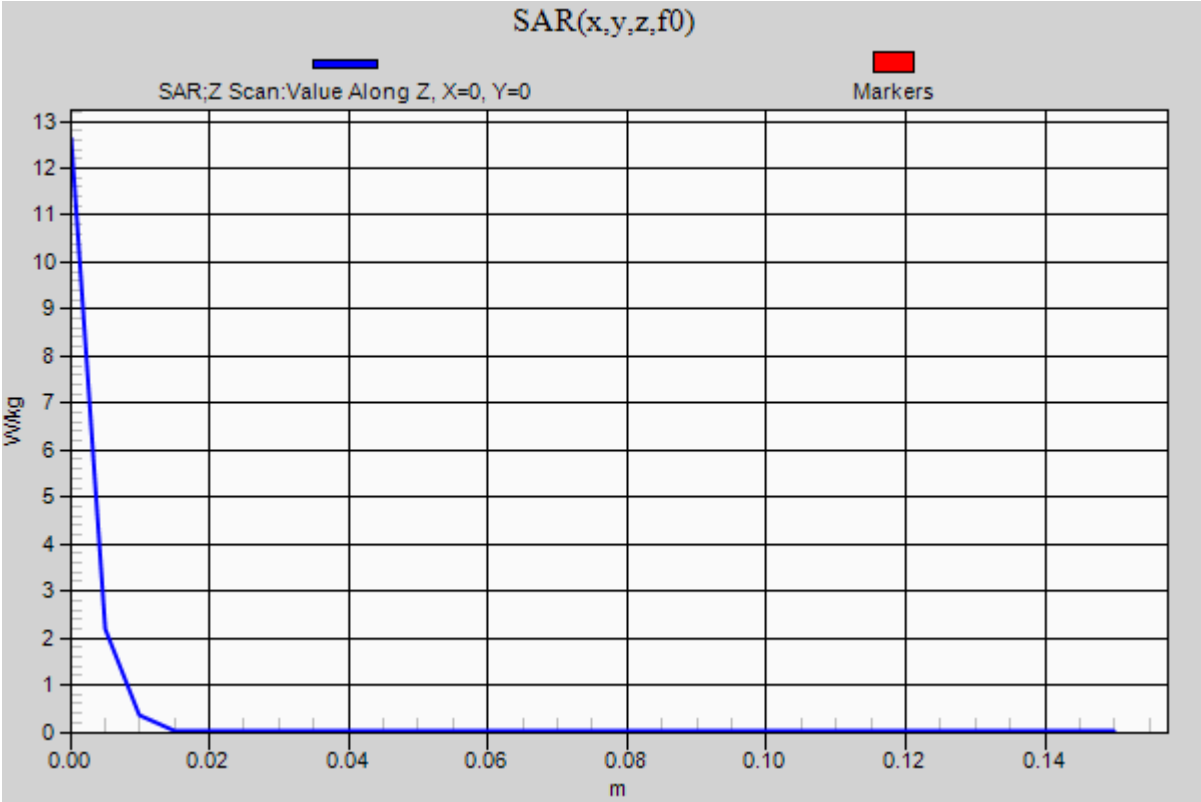

Body 5600MHz System Check DATA / Dipole5GHz / Forward Conducted Power : 100mW
Communication System: UID 0, CW (0); Communication System Band: D5GHz (5000.0 - 6000.0 MHz); Frequency: 5600 MHz; Duty Cycle: 1:1
Medium parameters used: f = 5600 MHz; σ = 5.868 S/m; ε_r = 47.488; ρ = 1000 kg/m^3
Phantom section: Flat Section
Measurement Standard: DASY5 (IEEE/IEC/ANSI C63.19-2007)
DASY5 Configuration
Probe: EX3DV4 - SN3922; ConvF(3.85, 3.85, 3.85); Calibrated: 2014/06/13;
Sensor-Surface: 2mm (Mechanical Surface Detection)
Electronics: DAE4 Sn1372; Calibrated: 2014/06/18
Phantom: ELI 4.0; Type: QDOVA001BB; Serial: 1045
Measurement SW: DASY52, Version 52.8 (7); SEMCAD X Version 14.6.10 (7164)

Area Scan (91x91x1): Interpolated grid: dx=1.000 mm, dy=1.000 mm
Maximum value of SAR (interpolated) = 16.6 W/kg

Zoom Scan (8x8x6)/Cube 0: Measurement grid: dx=4mm, dy=4mm, dz=2mm
Reference Value = 57.389 V/m; Power Drift = -0.07 dB
Peak SAR (extrapolated) = 34.3 W/kg
SAR(1 g) = 8.08 W/kg; SAR(10 g) = 2.2 W/kg
Maximum value of SAR (measured) = 16.1 W/kg

Date: 2014/07/27
Ambient Temp. : 24.0 degree.C. Liquid Temp.; 23.5 degree.C.

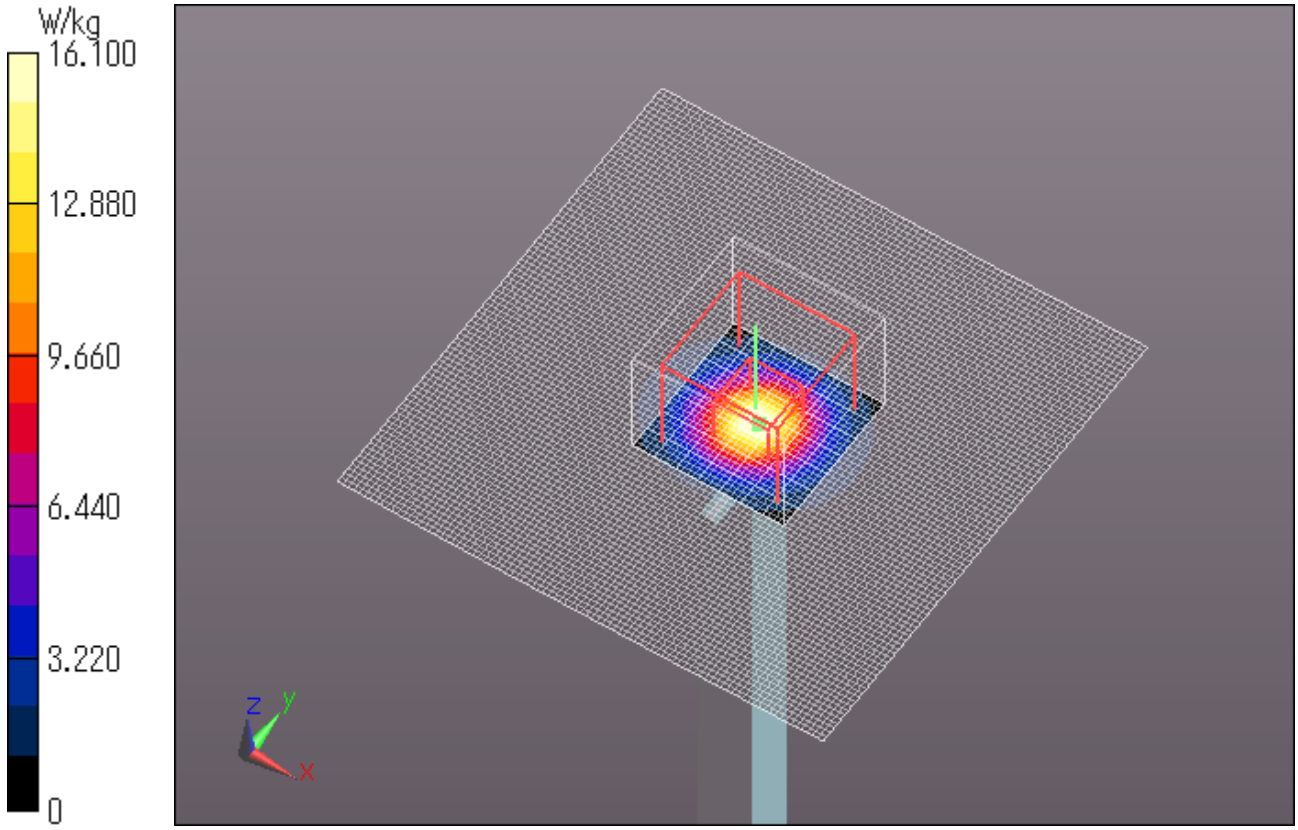

Body 5600MHz System Check DATA / Dipole5GHz / Forward Conducted Power : 100mW

Communication System: UID 0, CW (0); Communication System Band: D5GHz (5000.0 - 6000.0 MHz); Frequency: 5600 MHz; Duty Cycle: 1:1
Medium parameters used: f = 5600 MHz; σ = 5.868 S/m; ε_r = 47.488; ρ = 1000 kg/m^3
Phantom section: Flat Section
Measurement Standard: DASY5 (IEEE/IEC/ANSI C63.19-2007)
DASY5 Configuration
Probe: EX3DV4 - SN3922; ConvF(3.85, 3.85, 3.85); Calibrated: 2014/06/13;
Sensor-Surface: 0mm (Fix Surface)
Electronics: DAE4 Sn1372; Calibrated: 2014/06/18
Phantom: ELI 4.0; Type: QDOVA001BB; Serial: 1045
Measurement SW: DASY52, Version 52.8 (7); SEMCAD X Version 14.6.10 (7331)

Z Scan (1x1x31): Measurement grid: dx=20mm, dy=20mm, dz=5mm
Maximum value of SAR (measured) = 13.5 W/kg

Date: 2014/07/27
Ambient Temp. : 24.0 degree.C. Liquid Temp.; 23.5 degree.C.

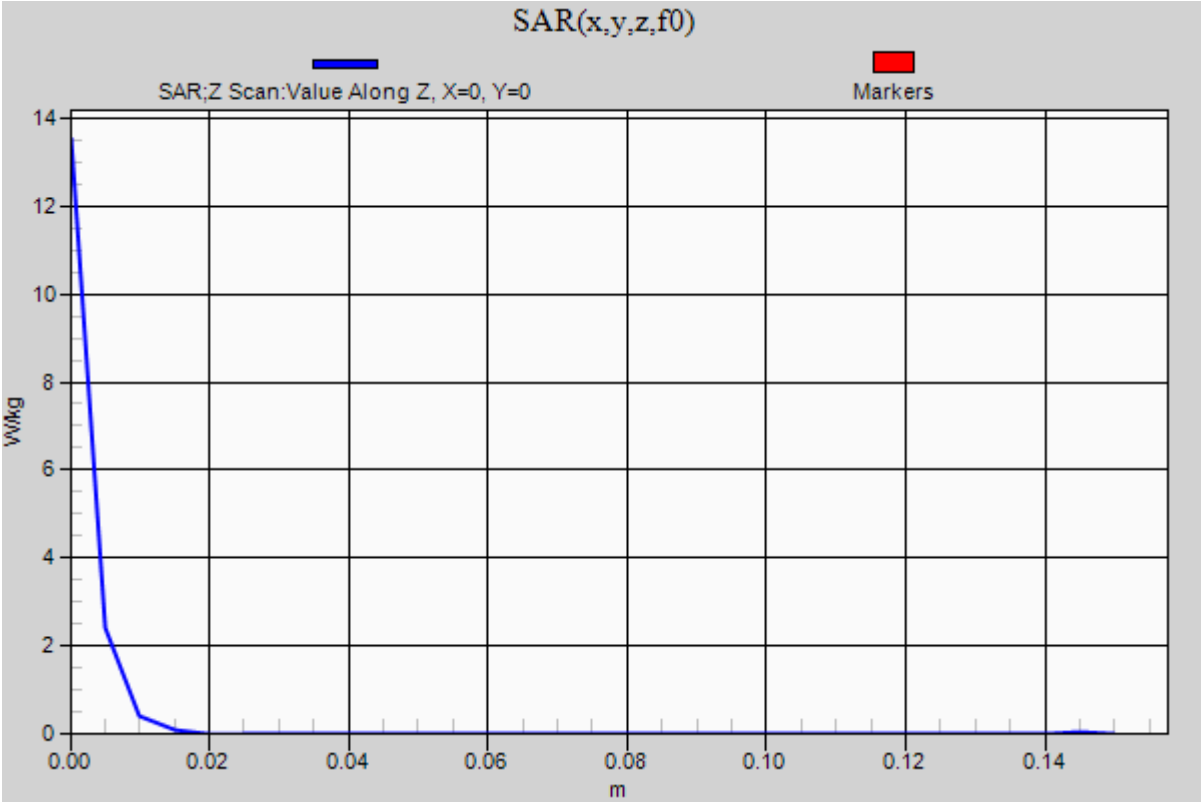

Body 5600MHz System Check DATA / Dipole5GHz / Forward Conducted Power : 100mW
Communication System: UID 0, CW (0); Communication System Band: D5GHz (5000.0 - 6000.0 MHz); Frequency: 5600 MHz; Duty Cycle: 1:1
Medium parameters used: f = 5600 MHz; σ = 5.728 S/m; ε_r = 47.418; ρ = 1000 kg/m^3
Phantom section: Flat Section
Measurement Standard: DASY5 (IEEE/IEC/ANSI C63.19-2007)
DASY5 Configuration
Probe: EX3DV4 - SN3922; ConvF(3.85, 3.85, 3.85); Calibrated: 2014/06/13;
Sensor-Surface: 2mm (Mechanical Surface Detection)
Electronics: DAE4 Sn1372; Calibrated: 2014/06/18
Phantom: ELI 4.0; Type: QDOVA001BB; Serial: 1045
Measurement SW: DASY52, Version 52.8 (7); SEMCAD X Version 14.6.10 (7164)

Area Scan (91x91x1): Interpolated grid: dx=1.000 mm, dy=1.000 mm
Maximum value of SAR (interpolated) = 16.1 W/kg

Zoom Scan (8x8x6)/Cube 0: Measurement grid: dx=4mm, dy=4mm, dz=2mm
Reference Value = 56.646 V/m; Power Drift = -0.01 dB
Peak SAR (extrapolated) = 34.6 W/kg
SAR(1 g) = 7.96 W/kg; SAR(10 g) = 2.2 W/kg
Maximum value of SAR (measured) = 16.2 W/kg

Date: 2014/07/28
Ambient Temp. : 24.0 degree.C. Liquid Temp.; 23.5 degree.C.

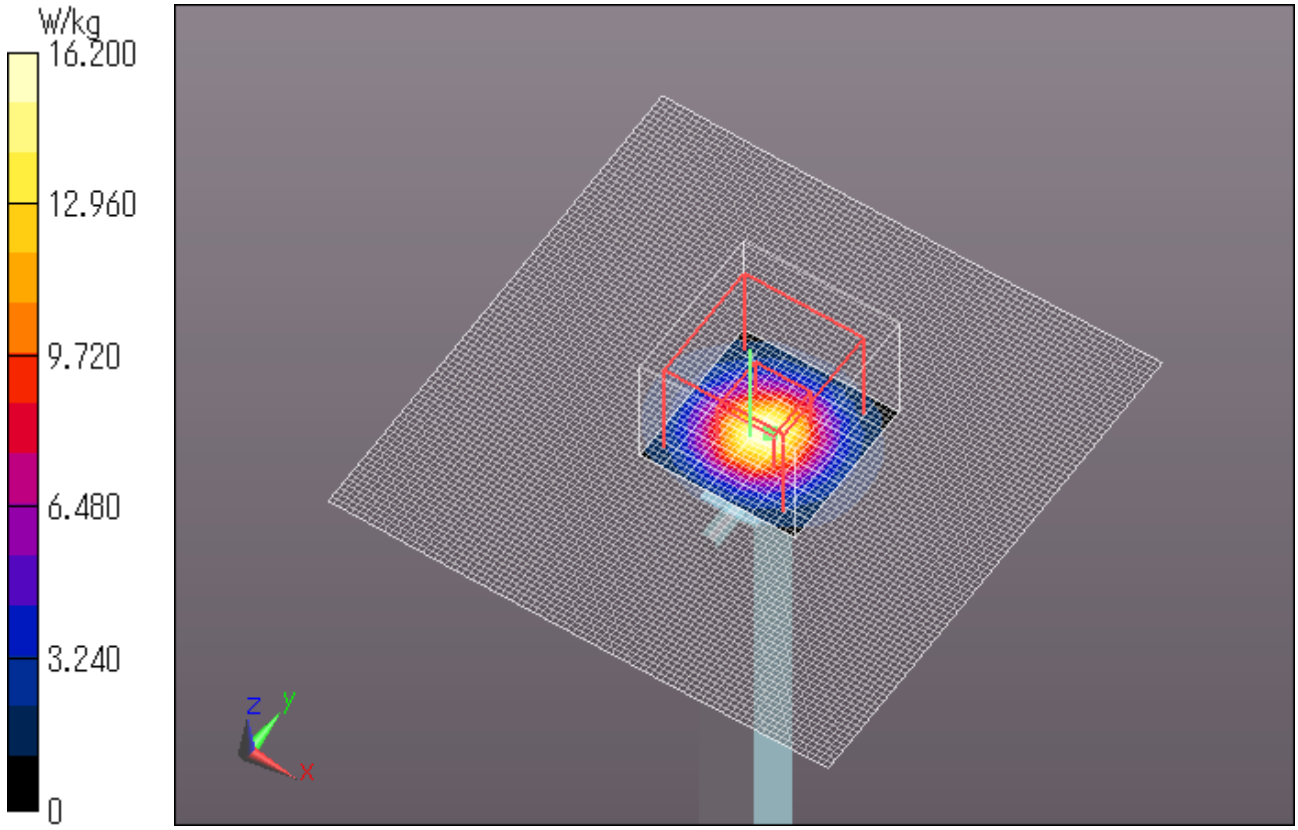

Body 5600MHz System Check DATA / Dipole5GHz / Forward Conducted Power : 100mW

Communication System: UID 0, CW (0); Communication System Band: D5GHz (5000.0 - 6000.0 MHz); Frequency: 5600 MHz; Duty Cycle: 1:1
Medium parameters used: f = 5600 MHz; σ = 5.728 S/m; ε_r = 47.418; ρ = 1000 kg/m^3
Phantom section: Flat Section
Measurement Standard: DASY5 (IEEE/IEC/ANSI C63.19-2007)
DASY5 Configuration
Probe: EX3DV4 - SN3922; ConvF(3.85, 3.85, 3.85); Calibrated: 2014/06/13;
Sensor-Surface: 0mm (Fix Surface)
Electronics: DAE4 Sn1372; Calibrated: 2014/06/18
Phantom: ELI 4.0; Type: QDOVA001BB; Serial: 1045
Measurement SW: DASY52, Version 52.8 (7); SEMCAD X Version 14.6.10 (7331)

Z Scan (1x1x31): Measurement grid: dx=20mm, dy=20mm, dz=5mm
Maximum value of SAR (measured) = 12.5 W/kg

Date: 2014/07/28
Ambient Temp. : 24.0 degree.C. Liquid Temp.; 23.5 degree.C.

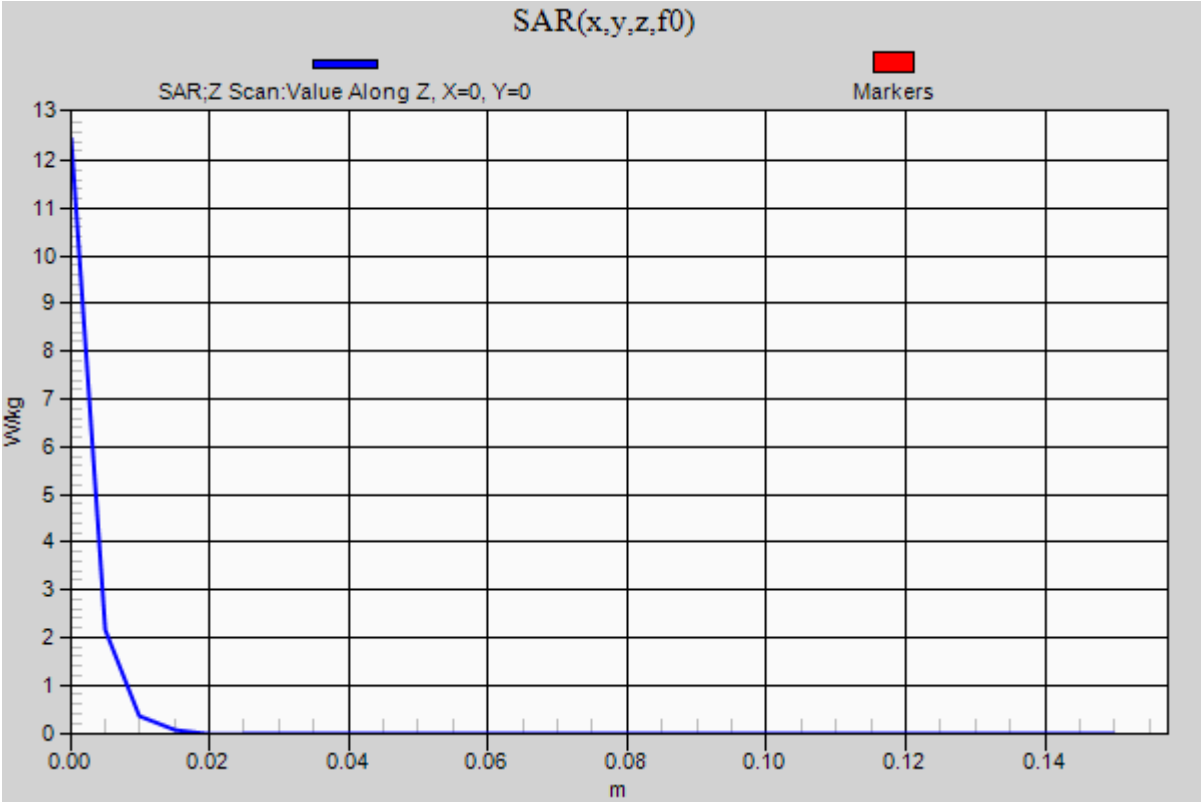

6. System check result Body 5800MHz

(1) Simulated Tissue Liquid Parameter confirmation

DIELECTRIC PARAMETERS MEASUREMENT RESULTS											
Date	Ambient Temp. [deg.c]	Relative Humidity [%]	Liquid type	Liquid Temp. [deg.c]	Measured Frequency [MHz]	Parameters	Target Value	Measured	Deviation [%]	Limit [%]	Remark
30-Jul	24	60	MBBL 3.5-5.8	23.5	5800	εr	48.2	47.1	-2.3	+/-5	*1
						σ [mho/m]	6.00	5.99	-0.2	+/-5	
31-Jul	24	59	MBBL 3.5-5.8	23.5	5800	εr	48.2	46.9	-2.7	+/-5	*1
						σ [mho/m]	6.00	5.90	-1.7	+/-5	

εr: Relative Permittivity / σ : Coductivity
*1 The Target value is a parameter defined in KDB 865664D01.

DIELECTRIC PARAMETERS MEASUREMENT RESULTS											
Date	Ambient Temp. [deg.c]	Relative Humidity [%]	Liquid type	Liquid Temp. [deg.c]	Measured Frequency [MHz]	Parameters	Target Value	Measured	Deviation [%]	Limit [%]	Remark
30-Jul	24	60	MBBL 3.5-5.8	23.5	5800	εr	46.3	47.1	1.7	+/-6	*2 *3
						σ [mho/m]	6.23	5.99	-3.9	+/-6	
31-Jul	24	59	MBBL 3.5-5.8	23.5	5800	εr	46.3	46.9	1.3	+/-6	*2 *3
						σ [mho/m]	6.23	5.90	-5.3	+/-6	

εr: Relative Permittivity / σ : Coductivity
*2 The target value is the calibrated dipole Body TSL parameters. (D5GHzV2 SN:1020, Measured Body TSL parameters)
*3 The limit is for deviation provided by manufacture.

(2) SAR correction for deviations of complex permittivity from target

The measured SAR results are corrected with target value of KDB865664D01.
Corrected SAR(1g) = Measured SAR(1g) x (100-⊿SAR)/100

$\Delta SAR = c\varepsilon\ \Delta\varepsilon r + c\sigma\ \Delta\sigma$
<1g>
$C\varepsilon = -7.854\times10^{-4}f^3 + 9.402\times10^{-3}f^2 - 2.742\times10^{-2}f - 0.2026$
$C\sigma = 9.804\times10^{-3}f^3 - 8.661\times10^{-2}f^2 + 2.981\times10^{-2}f + 0.7829$
<10g>
$C\varepsilon = 3.456\times10^{-3}f^3 - 3.531\times10^{-2}f^2 + 7.675\times10^{-2}f - 0.1860$
$C\sigma = 4.479\times10^{-3}f^3 - 1.586\times10^{-2}f^2 - 0.1972f + 0.7717$
'f ' is the frequency in GHz.

Date		30-Jul	31-Jul
	f(GHz)=	5.8	5.8
	⊿εr(%)=	-2.3	-2.7
	⊿σ(%)=	-0.2	-1.7
1g	Cε=	-0.1986	-0.1986
	Cσ=	-0.0449	-0.0449
	⊿SAR(%)=	0.47	0.61
10g	Cε=	-0.2544	-0.2544
	Cσ=	-0.0317	-0.0317
	⊿SAR(%)=	0.59	0.74

(3) System check result (for calibration by manufacture)

SYSTEM CHECK								
Date	Frequency [MHz]	SAR 1g [W/kg]						
		Forward Power 100mW		Conversion 1W	Target Value(1W)	Deviation [%]	Limit [%]	Remark
		Measured	⊿SAR corrected	Calculation				
30-Jul	5800.00	7.30	7.33	73.34	74.80	-1.9	+/-10	*4
31-Jul	5800.00	7.10	7.14	71.00	74.80	-5.1	+/-10	*4

*4 The taget value is the parameter defined in SAR for nominal Body TSL parameters in manufacturer calibrated dipole (D5GHzV2 SN:1020)
Please refer to " SAR result with Body TSL of Appendix 2 2. System Check Dipole (D5GHzV2,S/N: 1020)".

Body 5800MHz System Check DATA / Dipole5GHz / Forward Conducted Power : 100mW
Communication System: UID 0, CW (0); Communication System Band: D5GHz (5000.0 - 6000.0 MHz); Frequency: 5800 MHz; Duty Cycle: 1:1
Medium parameters used (interpolated): f = 5800 MHz; σ = 5.991 S/m; ε_r = 47.055; ρ = 1000 kg/m^3
Phantom section: Flat Section
Measurement Standard: DASY5 (IEEE/IEC/ANSI C63.19-2007)
DASY5 Configuration
Probe: EX3DV4 - SN3825; ConvF(4.05, 4.05, 4.05); Calibrated: 2013/12/13;
Sensor-Surface: 2mm (Mechanical Surface Detection)
Electronics: DAE4 Sn518; Calibrated: 2013/10/14
Phantom: ELI 4.0; Type: QDOVA001BB; Serial: 1045
Measurement SW: DASY52, Version 52.8 (8); SEMCAD X Version 14.6.10 (7331)

Area Scan (91x91x1): Interpolated grid: dx=1.000 mm, dy=1.000 mm
Maximum value of SAR (interpolated) = 14.4 W/kg

Zoom Scan (8x8x6)/Cube 0: Measurement grid: dx=4mm, dy=4mm, dz=2mm
Reference Value = 55.17 V/m; Power Drift = 0.09 dB
Peak SAR (extrapolated) = 31.9 W/kg
SAR(1 g) = 7.3 W/kg; SAR(10 g) = 2.01 W/kg
Maximum value of SAR (measured) = 14.6 W/kg

Date: 2014/07/30
Ambient Temp. : 24.0 degree.C. Liquid Temp.; 23.5 degree.C.

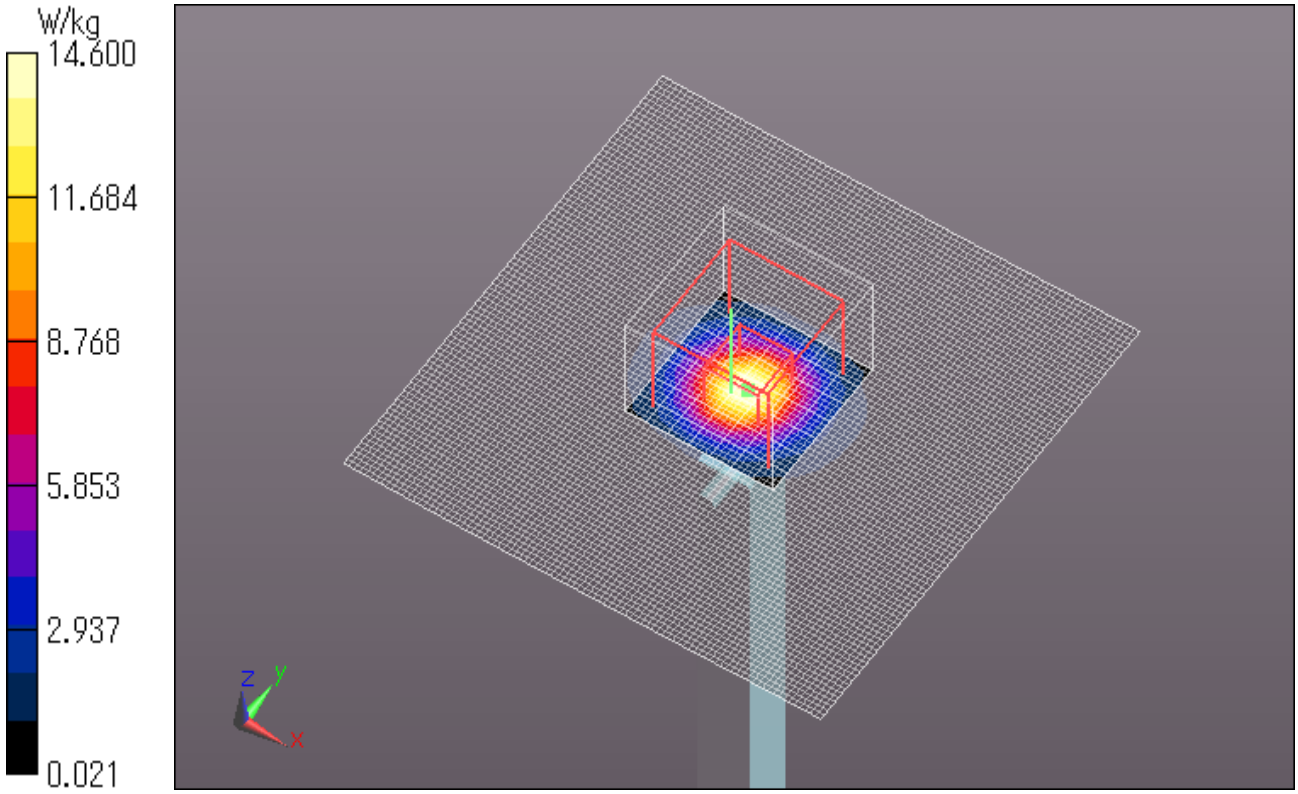

Body 5800MHz System Check DATA / Dipole5GHz / Forward Conducted Power : 100mW
Communication System: UID 0, CW (0); Communication System Band: D5GHz (5000.0 - 6000.0 MHz); Frequency: 5800 MHz; Duty Cycle: 1:1
Medium parameters used (interpolated): f = 5800 MHz; σ = 5.991 S/m; ε_r = 47.055; ρ = 1000 kg/m^3
Phantom section: Flat Section
Measurement Standard: DASY5 (IEEE/IEC/ANSI C63.19-2007)
DASY5 Configuration
Probe: EX3DV4 - SN3825; ConvF(4.05, 4.05, 4.05); Calibrated: 2013/12/13;
Sensor-Surface: 0mm (Fix Surface)
Electronics: DAE4 Sn518; Calibrated: 2013/10/14
Phantom: ELI 4.0; Type: QDOVA001BB; Serial: 1045
Measurement SW: DASY52, Version 52.8 (8); SEMCAD X Version 14.6.10 (7331)

Z Scan (1x1x31): Measurement grid: dx=20mm, dy=20mm, dz=5mm
Maximum value of SAR (measured) = 12.2 W/kg

Date: 2014/07/30
Ambient Temp. : 24.0 degree.C. Liquid Temp.; 23.5 degree.C.

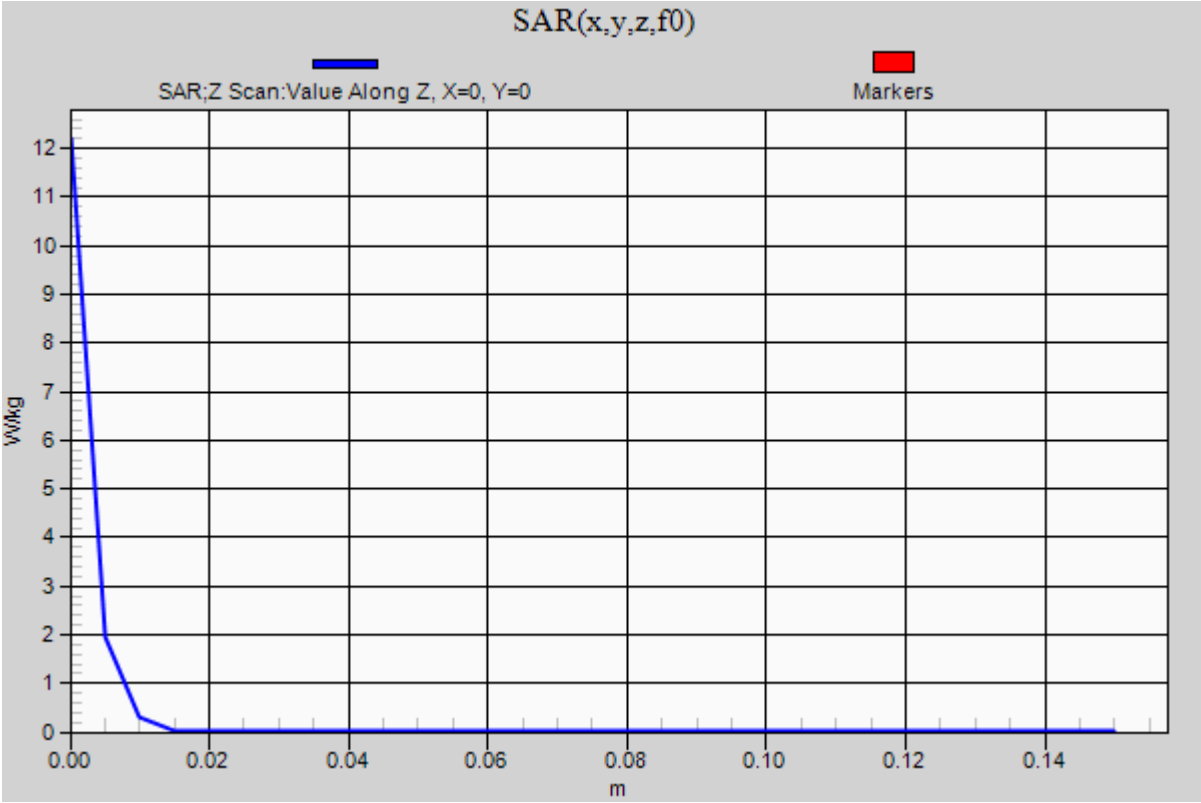

Body 5800MHz System Check DATA / Dipole5GHz / Forward Conducted Power : 100mW
Communication System: UID 0, CW (0); Communication System Band: D5GHz (5000.0 - 6000.0 MHz); Frequency: 5800 MHz; Duty Cycle: 1:1
Medium parameters used (interpolated): f = 5800 MHz; σ = 5.901 S/m; ε_r = 46.896; ρ = 1000 kg/m^3
Phantom section: Flat Section
Measurement Standard: DASY5 (IEEE/IEC/ANSI C63.19-2007)
DASY5 Configuration
Probe: EX3DV4 - SN3825; ConvF(4.05, 4.05, 4.05); Calibrated: 2013/12/13;
Sensor-Surface: 2mm (Mechanical Surface Detection)
Electronics: DAE4 Sn518; Calibrated: 2013/10/14
Phantom: ELI 4.0; Type: QDOVA001BB; Serial: 1045
Measurement SW: DASY52, Version 52.8 (8); SEMCAD X Version 14.6.10 (7331)

Area Scan (91x91x1): Interpolated grid: dx=1.000 mm, dy=1.000 mm
Maximum value of SAR (interpolated) = 14.5 W/kg

Zoom Scan (8x8x6)/Cube 0: Measurement grid: dx=4mm, dy=4mm, dz=2mm
Reference Value = 54.48 V/m; Power Drift = -0.07 dB
Peak SAR (extrapolated) = 31.5 W/kg
SAR(1 g) = 7.1 W/kg; SAR(10 g) = 1.95 W/kg
Maximum value of SAR (measured) = 14.1 W/kg

Date: 2014/07/31
Ambient Temp. : 24.0 degree.C. Liquid Temp.; 23.5 degree.C.

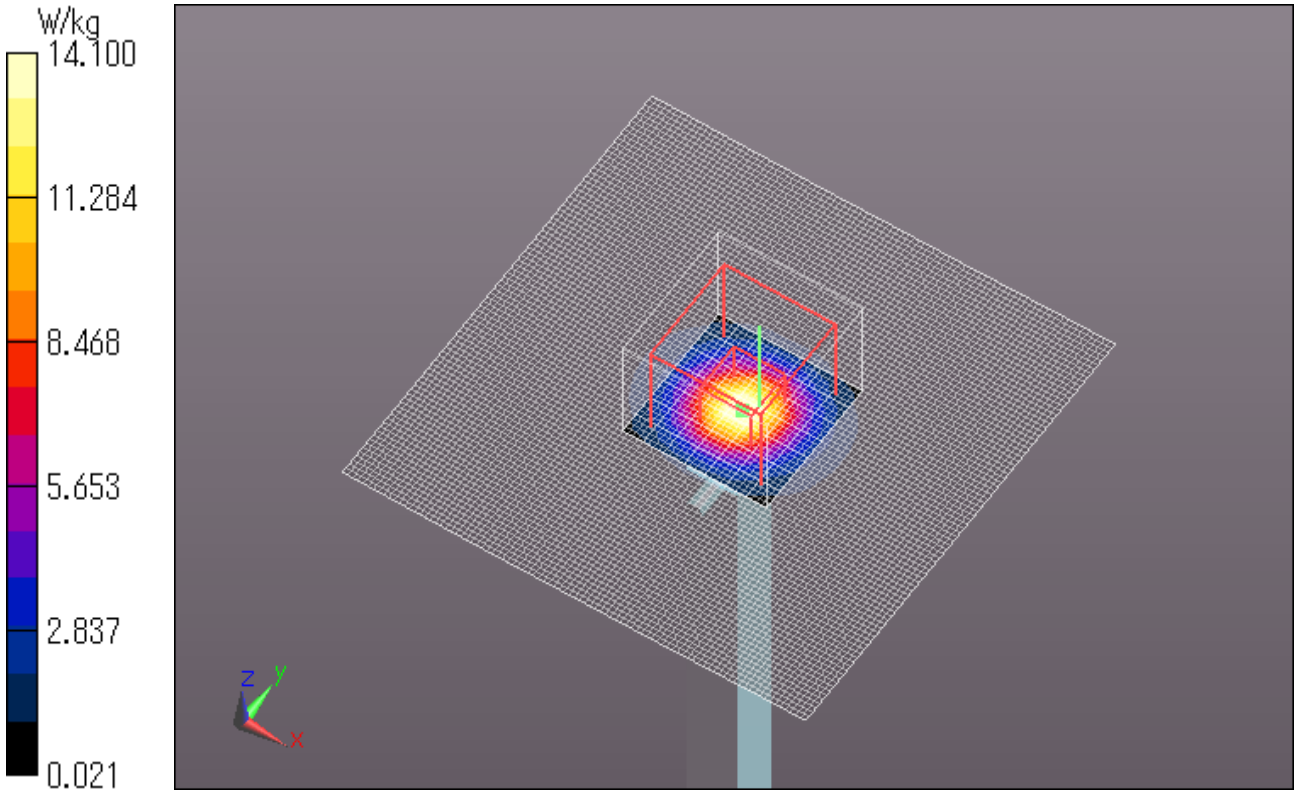

Body 5800MHz System Check DATA / Dipole5GHz / Forward Conducted Power : 100mW
Communication System: UID 0, CW (0); Communication System Band: D5GHz (5000.0 - 6000.0 MHz); Frequency: 5800 MHz; Duty Cycle: 1:1
Medium parameters used (interpolated): f = 5800 MHz; σ = 5.901 S/m; ε_r = 46.896; ρ = 1000 kg/m^3
Phantom section: Flat Section
Measurement Standard: DASY5 (IEEE/IEC/ANSI C63.19-2007)
DASY5 Configuration
Probe: EX3DV4 - SN3825; ConvF(4.05, 4.05, 4.05); Calibrated: 2013/12/13;
Sensor-Surface: 0mm (Fix Surface)
Electronics: DAE4 Sn518; Calibrated: 2013/10/14
Phantom: ELI 4.0; Type: QDOVA001BB; Serial: 1045
Measurement SW: DASY52, Version 52.8 (8); SEMCAD X Version 14.6.10 (7331)

Z Scan (1x1x31): Measurement grid: dx=20mm, dy=20mm, dz=5mm
Maximum value of SAR (measured) = 12.6 W/kg
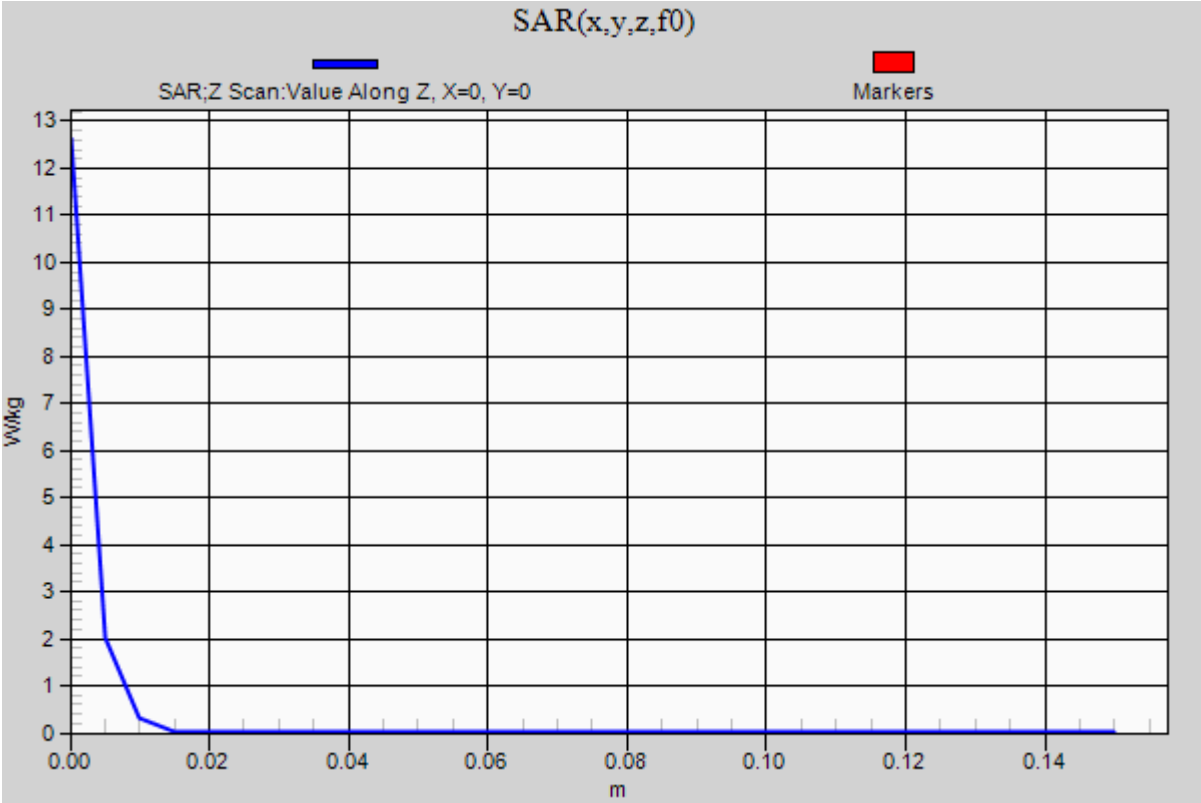
Date: 2014/07/31
Ambient Temp. : 24.0 degree.C. Liquid Temp.; 23.5 degree.C.