Chapter 3

General Operations

This chapter describes general operation methods of this device.

3.1 ● Startup and shutdown

Normally, this device is used with the power on.
When not used for more than 1 day, operate the start-up/shutdown as follows.

Reference

- Refer to the "Operation Manual" of the image processing controller regarding on/off for the image processing controller.

3.1.1 Startup sequence of this device

The startup sequence of this device is as follows.

● When using AeroDR Interface Unit

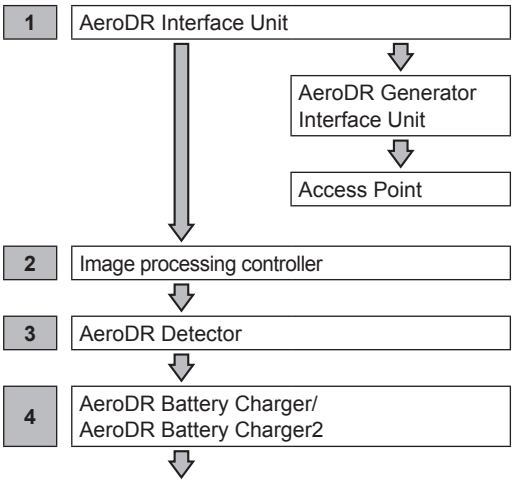

Confirm that the AeroDR Detector is ready for use on the image processing controller.

● When using AeroDR Interface Unit2

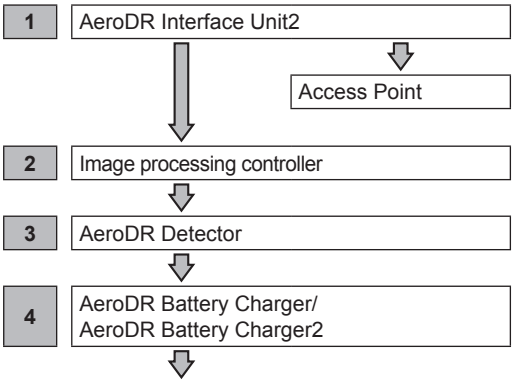

Confirm that the AeroDR Detector is ready for use on the image processing controller.

3.1.2 Startup of this device

The startup methods of this device are as follows.

● AeroDR Interface Unit, AeroDR Generator Interface Unit and Access Point

- The startup methods of the AeroDR Interface Unit, AeroDR Generator Interface Unit and Access Point are as follows.

1 Turn the power switch of the AeroDR Interface Unit on, and confirm that the LED (green) lights.

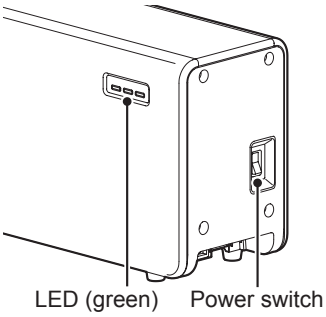

2 When the power switch of the AeroDR Interface Unit is turned on, power is also supplied to the AeroDR Generator Interface Unit, and the LED (green) will flash.

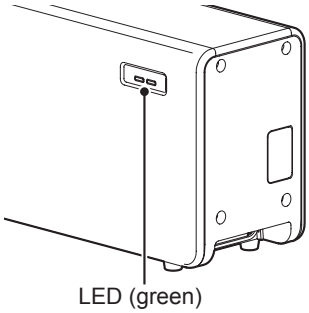

HINT

- In Aero Sync mode, the AeroDR Generator Interface Unit is not used.

3 When the power switch of the AeroDR Interface Unit is turned on, power is supplied to the Access Point, and the LED (umber) on the Access Point will light.

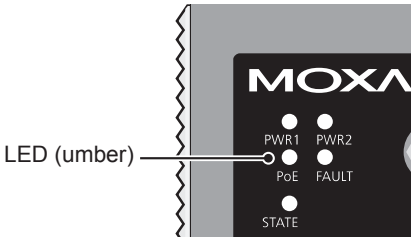

● **AeroDR Interface Unit2 and Access Point**

- The startup methods of the AeroDR Interface Unit2 and Access Point are as follows.

1 Turn the power switch of the AeroDR Interface Unit2 on, and confirm that the Detector Connection LED (green) and Generator Interface LED (green) light.

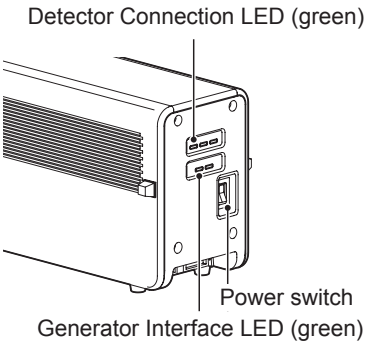

HINT

- It takes time for the Generator Interface LED (green) to light.

2 When the power switch of the AeroDR Interface Unit2 is turned on, power is supplied to the Access Point, and the LED (umber) on the Access Point will light.

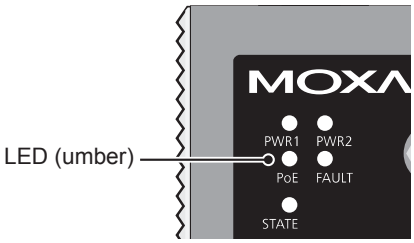

● **Image processing controller**

- Start the image processing controller by turning the power switch of the image processing controller on.

● **AeroDR Detector**

- If the AeroDR Detector is inserted into the AeroDR Battery Charger/AeroDR Battery Charger2 with a wireless connection, the AeroDR Detector should be removed.
- For a wired connection, confirm that the AeroDR UF Cable or the AeroDR I/F Cable is connected securely to the wired connection connector of the AeroDR Detector.
- Next, press the power switch of the AeroDR Detector for 2 seconds and turn it on, and confirm that the LED (green) is slowly flashing or lit.

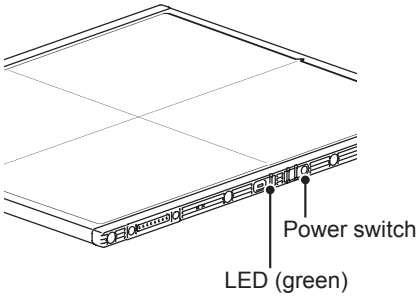

● **AeroDR Battery Charger**

- When the power cable is connected to the wall outlet, power of the AeroDR Battery Charger is turned on. Confirm that the LED (green) is slowly flashing.

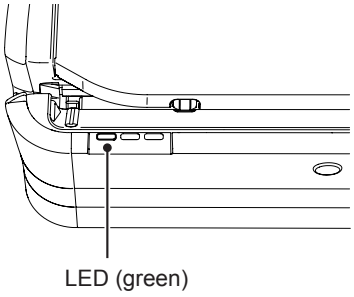

● **AeroDR Battery Charger2**

- Turn the power switch of the AeroDR Battery Charger2 on, and confirm that the LED (green) is slowly flashing.

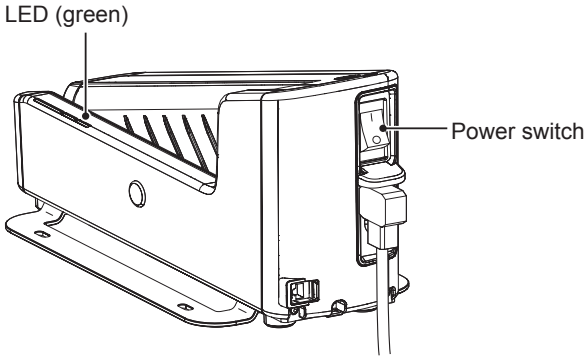

3.1.3 Shutdown sequence of this device

The startup sequence of this device is as follows.

● **When using AeroDR Interface Unit**

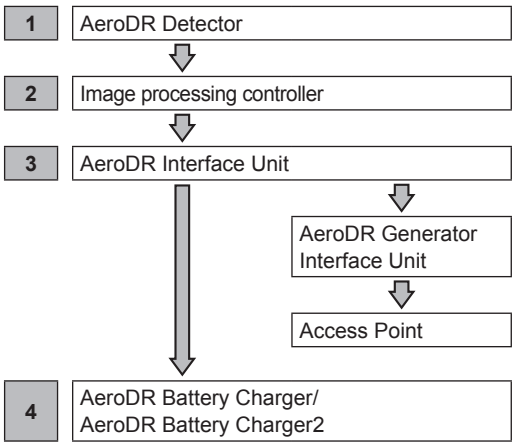

● **When using AeroDR Interface Unit2**

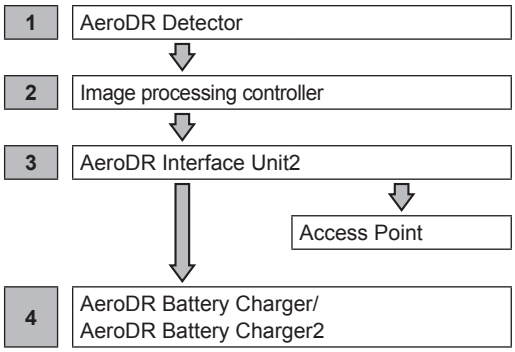

3.1.4 Shutdown of this device

The shutdown methods of this device are as follows.

● **AeroDR Detector**

- Press the power switch of the AeroDR Detector for 5 seconds to turn it off, and confirm that the LED (green) is turned off.

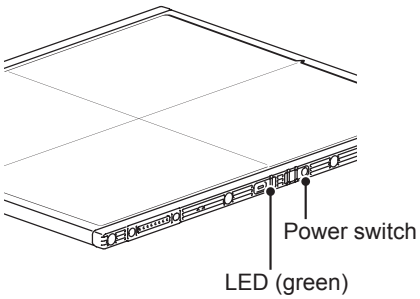

● **Image processing controller**

- Turn the power switch of the image processing controller off, and shutdown the image processing controller.

● **AeroDR Interface Unit, AeroDR Generator Interface Unit and Access Point**

- The shutdown methods of the AeroDR Interface Unit, AeroDR Generator Interface Unit and Access Point are as follows.

1 Turn the power switch of the AeroDR Interface Unit off, and confirm that the LED (green) is turned off.

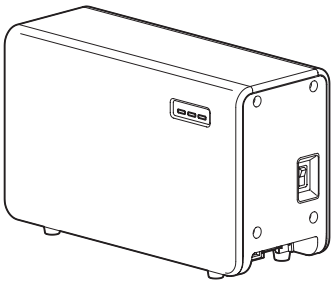

2 When the power switch of the AeroDR Interface Unit is turned off, power supply to the AeroDR Generator Interface Unit is terminated. The LED (green) will turn off on the AeroDR Generator Interface Unit.

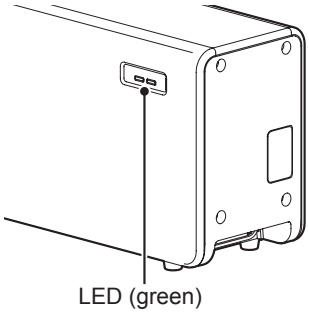

HINT

- In Aero Sync mode, the AeroDR Generator Interface Unit is not used.

3 When the power switch of the AeroDR Interface Unit is turned off, power supply to Access Point is terminated. The LED (umber) on the Access Point will turn off.

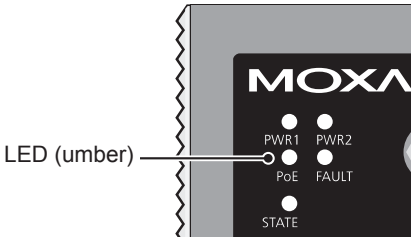

● **AeroDR Interface Unit2 and Access Point**

- The shutdown methods of the AeroDR Interface Unit2 and Access Point are as follows.

1 Turn the power switch of the AeroDR Interface Unit2 off, and confirm that the Detector Connection LED (green) and Generator Interface LED (green) are turned off.

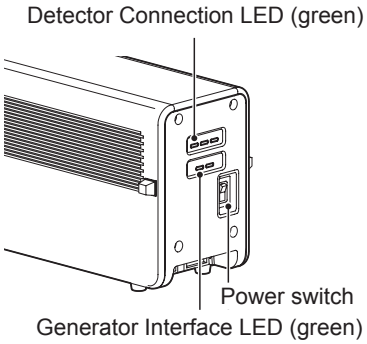

2 When the power switch of the AeroDR Interface Unit2 is turned off, power supply to the Access Point is terminated. The LED (umber) on the Access Point will turn off.

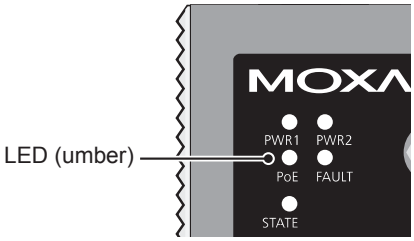

● **AeroDR Battery Charger**

- When the power cable is removed from the wall outlet, the power of the AeroDR Battery Charger is turned off and the LED (green) is turned off.

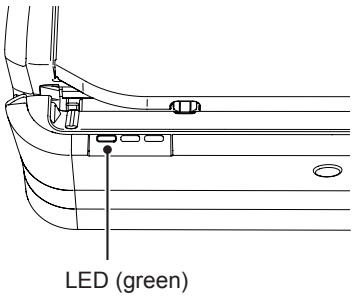

● **AeroDR Battery Charger2**

- Turn the power switch of the AeroDR Battery Charger2 off, and confirm that the LED (green) is turned off.

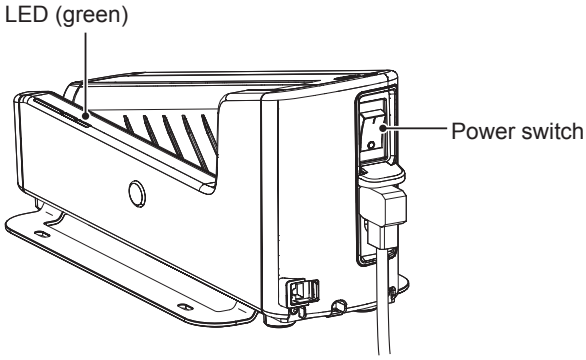

3.2 ● Operation of AeroDR Detector

3.2.1 Exposure

Exposure with this device is performed with the following procedure.

● **Exposure under the basic connection example**

1 Perform examination registration with the image processing controller.

2 Check that this device is ready to expose images, and then prepare for the exposure.

3 Push the exposure switch of the X-ray device to perform the exposure.

- When the exposure is completed, images are stored in the AeroDR Detector and will then be converted to digital data and sent to the image processing controller sequentially.

4 Check that the exposed image is displayed on the image processing controller.

● **Exposure under the S-SRM connection example**

1 Perform examination registration with the image processing controller.

2 Check that this device is ready to expose images, and then prepare for the exposure.

3 Push the S-SRM's hand switch to the first stage.

- The exposure preparation signal is sent to the X-ray device.

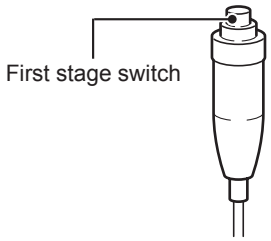

4 Push the S-SRM's hand switch up to the second level to perform exposure.

- Exposure is performed from the X-ray device to produce X-ray images.
- When the exposure is completed, images are stored in the AeroDR Detector and will then be converted to digital data and sent to the image processing controller sequentially.

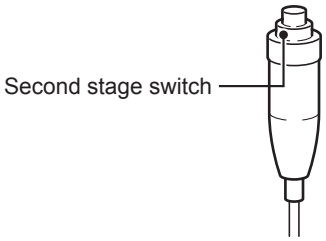

5 Check that the exposed image is displayed on the image processing controller.

IMPORTANT

- The AeroDR Detector is precision equipment, and therefore impact or vibration during radiography or image transfer may affect the image quality. Be careful when handling the AeroDR Detector during and just after radiography.

HINT

- If the AeroDR Detector remains unused for a long time (time can be set) it transitions to the sleep mode.
- When the image processing controller is ready to expose, it recovers from the sleep mode.

Reference

- Regarding the operation of the image processing controller, refer to the "Operation Manual" of the image processing controller.

3.2.2 AeroDR Detector orientation

Change the orientation of the AeroDR Detector according to the exposure body part.
Expose with the triangular mark upward when exposing in portrait, and with the triangular mark to the side when exposing in landscape.

● When exposing in portrait

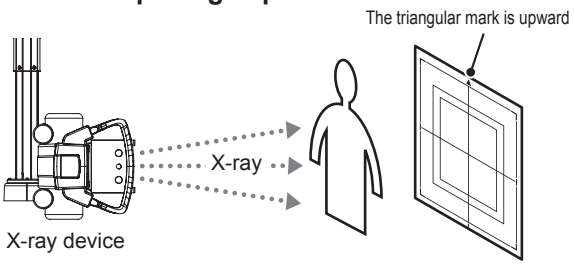

● When exposing in landscape

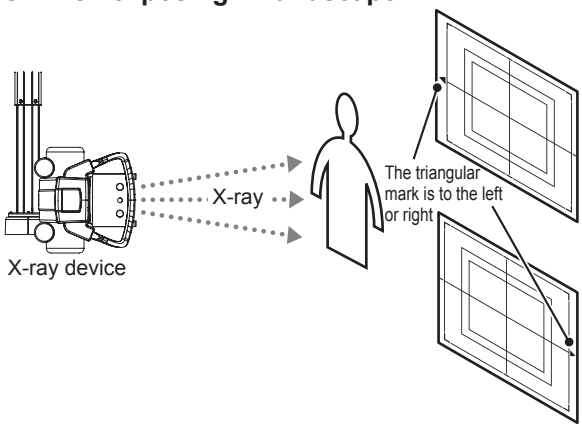

IMPORTANT

- The side with the triangular mark is the exposure surface.
- When exposing in landscape, the direction of the triangular mark is set according to exposure environment.
- Radiography is not allowed on a subject in a horizontal position when an AeroDR 1717HQ is used.

3.2.3 Precautions for exposure

During exposure give adequate attention to the following items.

● High-dose exposure

- When high-dose exposures are performed continuously, afterimages of the last exposure will occasionally be visible. The affect of afterimages in this device can be resolved by leaving longer intervals between exposures, so make the intervals between exposures longer than usual when performing high-dose exposure.
- During high-dose exposure, continual use of a lead or other marker at the same position can cause burning in of the afterimage. Therefore, avoid using it in the same position. Also, if image burn-in is visible, run calibration.

● Exposure time

- Select the maximum exposure time from 0.7, 1.7, and 3.2.
- AeroDR Detectors whose maximum exposure time can be set to 4.0, 6.7, 10.3 are as follows.

AeroDR Detector	Serial Number	
	First four digits	Number
AeroDR 1417HQ	A5DP	50198 or more
AeroDR 1012HQ	A5TE	51001 or more

- The exposure time for actual exposures should not exceed the maximum exposure time you have set. Otherwise, exposure may fail or correct images may not be able to be obtained.

IMPORTANT

- If you increase the maximum exposure time, the AeroDR Detector may take longer to exit sleep mode.
- Set exposure time to within 0.8 seconds when the Aero Sync mode is used.

HINT

- Use the image processing controller to set the maximum exposure time. In some cases, the maximum exposure time is fixed according to the X-ray device. For details, contact Konica Minolta technical representatives.
- When using ImagePilot as the image processing controller, it is not possible to change the maximum exposure time.

● Exposure switch

- If the exposure switch remains held down, it may result in an afterimage becoming visible. Once exposure is finished, release the exposure switch immediately.

● Grid

- Use the following grid when exposing.

Grid density	40 lp/cm or 34 lp/cm
Grid ratio	Variety
Convergence distance	Variety
Angle error	40 lp/cm: 1.0° or less 34 lp/cm: 1.7° or less

IMPORTANT

- For an AeroDR 1417S without the "1417S" identification, use a grid with a grid density of 34 lp/cm and an angle error of 0.5°or less.

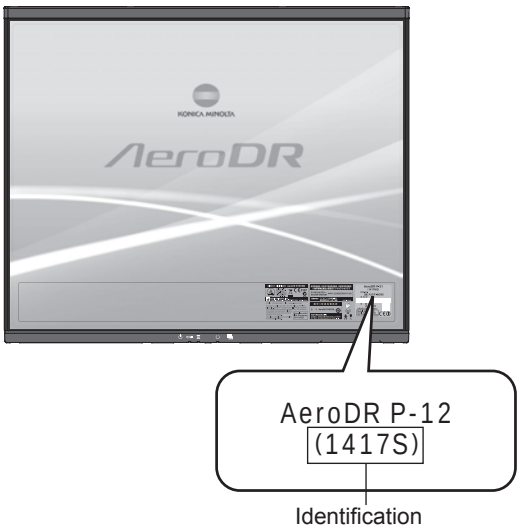

- When the "Aero Sync mode" is used, use a grid with a grid ratio of 8 or less.
- A capped grid is recommended when laying the grid over the AeroDR Detector on the table top or for exposure with the portable X-ray diagnostic device.

● Exposure area

- The size lines of AeroDR Detector indicate the exposure size.
- During exposure, place the exposure body part within the white lines on the four corners.

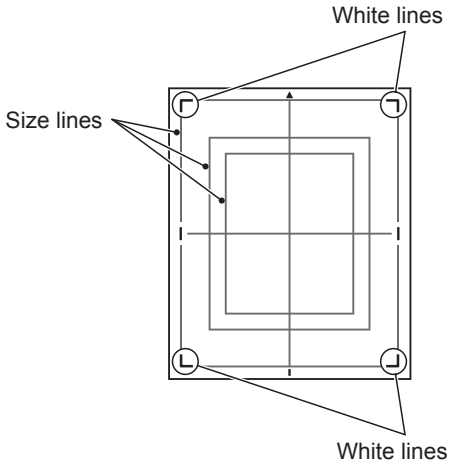

● S-SRM connection

- When S-SRM connection is adopted, make sure to perform exposure using the hand switch connected to the AeroDR Interface Unit2 and AeroDR Generator Interface Unit.
- If exposure is performed using the hand switch on the operation panel of the X-ray device, exposure synchronized to the AeroDR SYSTEM is not possible.

IMPORTANT

- If you restart the image processing controller, also restart the AeroDR Interface Unit/AeroDR Interface Unit2.

● Wired connection

- When performing exposure with a wired connection, fasten the wired cable horizontally to the wired connection connector of the AeroDR Detector. If connected at an angle, transverse (noise) sometimes gets into acquired images after exposure.

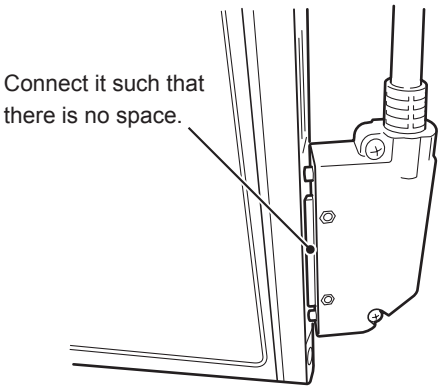

● Wireless communications environment

- With a wireless environment, it is possible that errors such as no wireless connection, wireless communication terminates, and lengthened exposure cycle time might occur.

HINT

- Problems with a wireless communications environment can occur in the following conditions:
  - Installed location of the Access Point is not good.
  - When inserted in the wall stand, table, or stretcher, the opening in the wall stand or table is too small and there is no passage for the radio waves.
  - The radio waves are not emitted due to metal parts close to the antenna, which changes the antenna characteristics.
  - For exposures where the body touches the AeroDR Detector directly, the radio waves are not emitted if the body completely covers the antennas positioned in 2 places.
  - Other devices use the same radio band, and cause interference.

● AED (Automated External Defibrillator)

- When an AED (Automated External Defibrillator) is used, move the AeroDR Detector away from the patient. High voltage and high current may result in a breakdown of the AeroDR Detector.

● The operating temperature environment of AeroDR Detectors

- If an AeroDR Detector is left close to or in contact with a heat generator such as electric carpet, its safety device may be activated and the AeroDR Detector may fail to work properly.

● Identify the AeroDR Detector that users can use in Aero Sync mode

- Confirm that if the following identification is in the AeroDR Detector that users can use in Aero Sync mode.

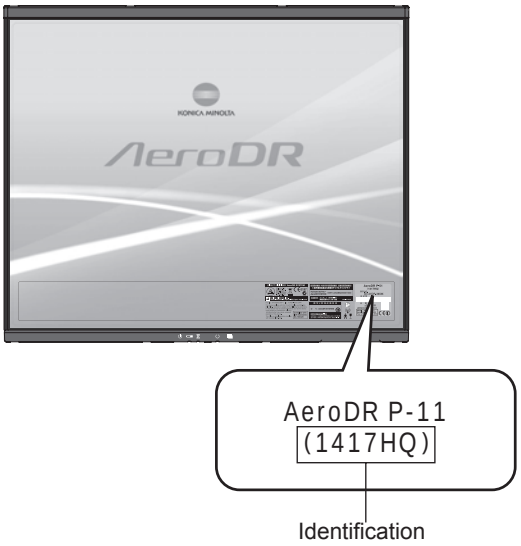

AeroDR Detector	Identification
AeroDR 1417HQ	1417HQ
AeroDR 1717HQ	1717HQ
AeroDR 1012HQ	1012HQ

IMPORTANT

- Users can not use Aero Sync Mode in the AeroDR Detector if it is AeroDR 1417S.
- Users cannot use Aero Sync mode in the AeroDR Detector if the first four digits of its SerialNumber are shown in the following table in the AeroDR 1417HQ or AeroDR 1717HQ.

AeroDR Detector	SerialNumber that cannot be used
AeroDR 1417HQ	A45Y
AeroDR 1717HQ	A54T

● **Exposure with the Aero Sync mode**

- To use a grid in Aero Sync mode, align the orientation of the triangular mark of the AeroDR Detector with the grid bar as shown in the following figure.

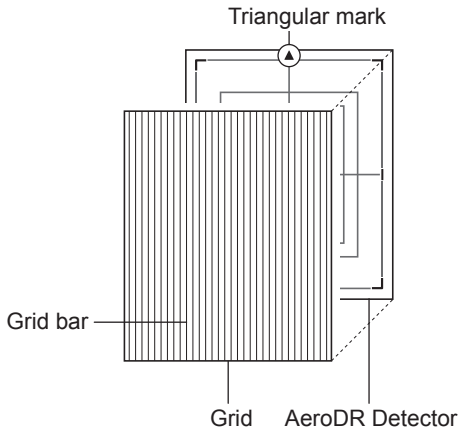

- Do not use additional filters for exposure dose reduction.

3.3 ● Charging of AeroDR Detector

Charge the AeroDR Detector when the LED (blue) on the AeroDR Detector lights or flashes, or when the battery level gets low in the status display of the AeroDR Detector on the image processing controller.

IMPORTANT

- During charging, if the AeroDR Detector should become hot, stop charging immediately.
- If charging errors occur repeatedly, contact Konica Minolta technical representatives.

HINT

- The AeroDR Detector can be charged when the power is either on or off.
- The AeroDR Detector can be used while stopping charging in progress.
- To charge the AeroDR Detector with the AeroDR Battery Charger when you do not use it for a long time such as during the night, charge the AeroDR Detector with its power turned off.
- Even if you use the battery equipped with this device for repeated quick charging and use, deterioration of battery life is small compared to a lithium-ion battery.

3.3.1 Charging with AeroDR Battery Charger

Inserting the AeroDR Detector into the AeroDR Battery Charger performs charging of the AeroDR Detector.

1 Confirm that the LED (green) of the AeroDR Battery Charger is slowly flashing.

2 Slowly insert the AeroDR Detector with its exposure side pointed toward the operator until the buzzer sounds. When inserted, charging of the AeroDR Detector begins.

Insert from the side

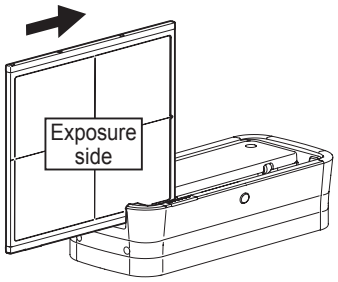

Slide slowly

Insert from the front (top)

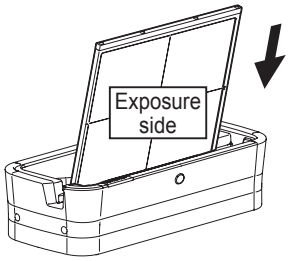

Load slowly

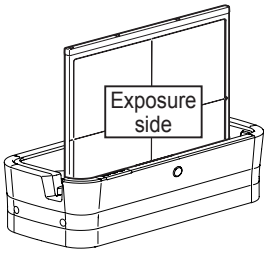

Inserted

3 Once the AeroDR Detector is inserted correctly and charging starts, the LED (blue) on the AeroDR Battery Charger will light.

4 Once charging of the AeroDR Detector is completed, the LED (blue) on the AeroDR Battery Charger will turn off.

IMPORTANT

- Handle the AeroDR Detector with extreme care when inserting it into the AeroDR Battery Charger.
- The LED of the AeroDR Detector is not visible when the AeroDR Detector is inserted into the AeroDR Battery Charger.
- The wired connection connector of the AeroDR Detector may become warm right after charging on the AeroDR Battery Charger. This often occurs during charging and is not a malfunction.
- The AeroDR 1012HQ cannot be charged in the AeroDR Battery Charger.

HINT

- If there is any problem during charging, the LED (orange) on the AeroDR Battery Charger will light. Also, charging will stop when an error occurs.

5 Remove the AeroDR Detector from the AeroDR Battery Charger.

- Pull the AeroDR Detector to remove it.

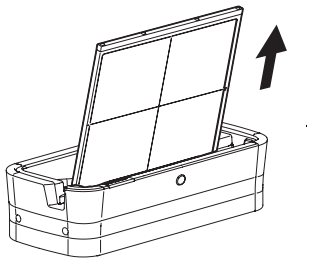

3.3.2 Charging with AeroDR Battery Charger2

Inserting the AeroDR Detector into the AeroDR Battery Charger2 performs charging of the AeroDR Detector.

1 Confirm that the LED (green) of the AeroDR Battery Charger2 is slowly flashing.

2 Slowly insert the AeroDR Detector with its exposure side pointed toward the operator until the buzzer sounds. When inserted, charging of the AeroDR Detector begins.

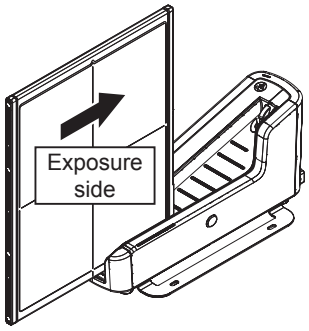

Load slowly

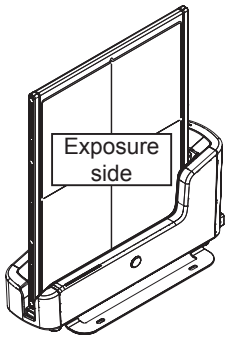

Inserted

HINT

- AeroDR 1717HQ is inserted

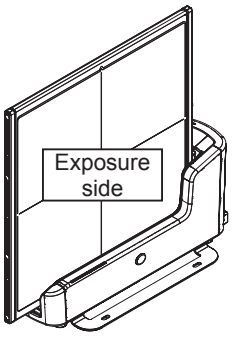

- AeroDR 1012HQ is inserted

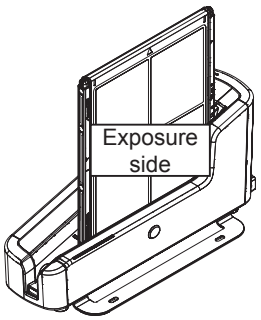

3 Once the AeroDR Detector is inserted correctly and charging starts, the LED (blue) on the AeroDR Battery Charger2 will flash or light.

- The LED (blue) on the AeroDR Battery Charger2 changes according to the level of battery power of the AeroDR Detector.

Battery level	LED display
2% or less	Slow flashing (blue)
3 to 49%	Lit and Slow flashing (blue)
50 to 79%	Lit and Slow flashing (blue)
80% or more	Lit (blue)

4 Once charging of the AeroDR Detector is completed, all the LEDs (blue) on the AeroDR Battery Charger2 will turn on.

IMPORTANT

- Handle the AeroDR Detector with extreme care when inserting it into the AeroDR Battery Charger2.
- The wired connection connector of the AeroDR Detector may become warm right after charging on the AeroDR Battery Charger2. This often occurs during charging and is not a malfunction.

HINT

- If there is any problem during charging, the LED (orange) on the AeroDR Battery Charger2 will light. Also, charging will stop when an error occurs.

5 Remove the AeroDR Detector from the AeroDR Battery Charger2.

- Tilt the AeroDR Detector in the direction shown in the following figure and remove it.

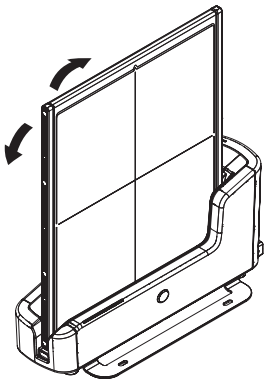

IMPORTANT

- As the AeroDR Detector is locked by a magnet, do not pull it out horizontally or vertically.

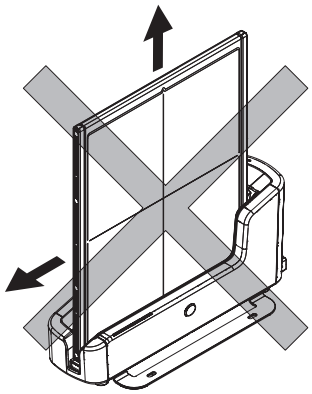

3.3.3 Charging with the wired cable

Connecting the AeroDR UF Cable or AeroDR I/F Cable to the AeroDR Detector performs charging of the AeroDR Detector.

1 Confirm that the LED (green) of the AeroDR Interface Unit or the Detector Connection LED (green) and Generator Interface LED (green) of the AeroDR Interface Unit2 light.

2 Securely connect the AeroDR I/F Cable or AeroDR UF Cable to the wired connection connector on the AeroDR Detector. Once it is connected, the AeroDR Detector will start charging.

When the AeroDR I/F Cable is connected

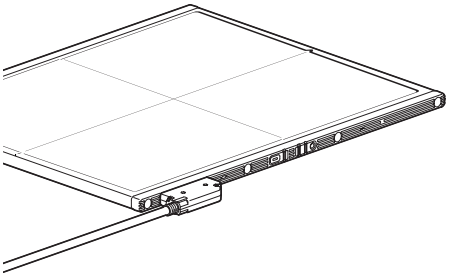

When the AeroDR UF Cable is connected

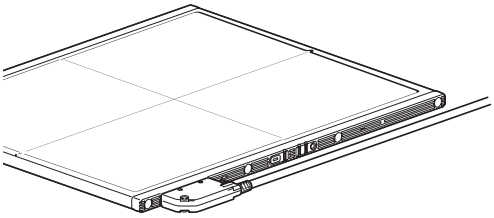

3 Once the charging of the AeroDR Detector is higher than 10%, the LED (blue) on the AeroDR Detector will go out.

HINT

- Confirm completion of full charge and the level of battery power with the image processing controller.
- If there is any problem during charging, the LED (orange) on the AeroDR Detector will light. Also, charging will stop when an error occurs.

3.3.4 Charging time guide

To fully charge the AeroDR Detector requires the following charging time.

Charging status	Charging time of the AeroDR Detector when the power is off	
	AeroDR 1417HQ AeroDR 1417S AeroDR 1717HQ	AeroDR 1012HQ
Via the AeroDR Battery Charger	Approx. 30 min	-
Via AeroDR Battery Charger2	Approx. 60 min	Approx. 30 min
Via wired cable	Approx. 60 min	Approx. 30 min

IMPORTANT

- When the AeroDR Detector is on, the charging time will be slightly longer as it depends on the operation status.

3.3.5 AeroDR Detector charging display

The AeroDR Detector LED (blue) changes according to the level of battery power.

Battery level	LED display
Less than 3% (exposure not possible)	Lit (blue)
Less than 5%	Fast flashing (blue)
Less than 10%	Slow flashing (blue)
10% or more	Off

IMPORTANT

- When the battery runs down completely, all the LEDs go out. Confirm that the LED (green) either lights or flashes when you perform exposure.

3.4 ● Registration and selection of the AeroDR Detector

By registering the AeroDR Detector in the image processing controller using one of the following methods, the AeroDR Detector can be moved between exposure rooms.

- Insert it into the AeroDR Battery Charger/AeroDR Battery Charger2
- Connect the AeroDR I/F Cable or AeroDR UF Cable to the wired connection connector

IMPORTANT

- AeroDR 1012HQ cannot be registered with the AeroDR Battery Charger.
- When using ImagePilot as the image processing controller, it is not possible to move the AeroDR Detector between different exposure rooms.
- Once it is registered in a new exposure room, it will not be usable in the previous exposure room. When returning to a previous exposure room, perform the registration operation again.

3.4.1 Registration with AeroDR Battery Charger

To register the AeroDR Detector in the AeroDR Battery Charger, follow the procedure below.

1 Make sure that all the devices in the destination exposure room are usable.

2 Insert the AeroDR Detector into AeroDR Battery Charger in the destination exposure room.

- Registration process will start.

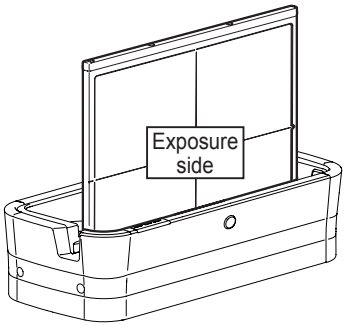

3 Once the registration is completed, a buzzer will sound on the AeroDR Battery Charger, and the LED (green) will change from slow flashing to lit.

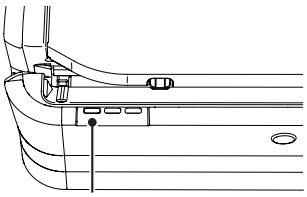

4 Confirm that the AeroDR Detector icon is displayed on the image processing controller.

IMPORTANT

- When an AeroDR Battery Charger exclusively for charge is used, confirm that the battery charger in the destination has a "Charge and registration" label.

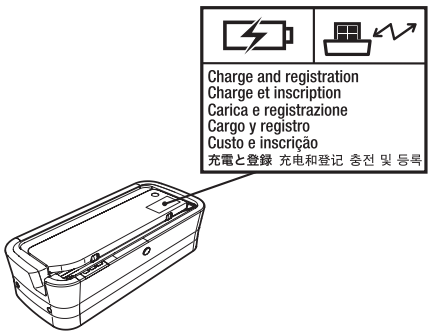

HINT

- Charging will also start when the AeroDR Detector is inserted into the AeroDR Battery Charger, and the AeroDR Battery Charger LED (blue) will light.

3.4.2 Registration with AeroDR Battery Charger2

To register the AeroDR Detector in the AeroDR Battery Charger2, follow the procedure below.

1 Make sure that all the devices in the destination exposure room are usable.

2 Insert the AeroDR Detector into AeroDR Battery Charger2 in the destination exposure room.

- Registration process will start.

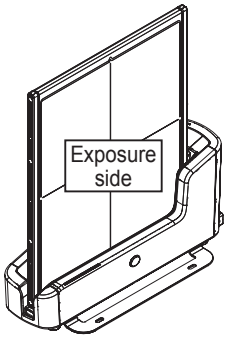

3 Once the registration is completed, a buzzer will sound on the AeroDR Battery Charger2, and the LED (green) will change from slow flashing to lit.

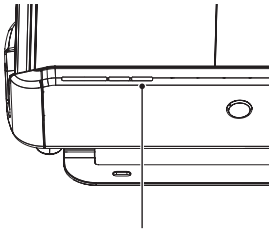

4 Confirm that the AeroDR Detector icon is displayed on the image processing controller.

HINT

- Charging will also start when the AeroDR Detector is inserted into the AeroDR Battery Charger, and the AeroDR Battery Charger LED (blue) will light or flash.

3.4.3 Registration with the wired cable

To register the AeroDR Detector by connecting the AeroDR I/F Cable or AeroDR UF Cable to the wired connection connector, follow the procedures below.

1 Make sure that all the devices in the destination exposure room are usable.

2 Securely connect the AeroDR I/F Cable or AeroDR UF Cable to the wired connection connector on the AeroDR Detector.

- Registration process will start.

When the AeroDR I/F Cable is connected

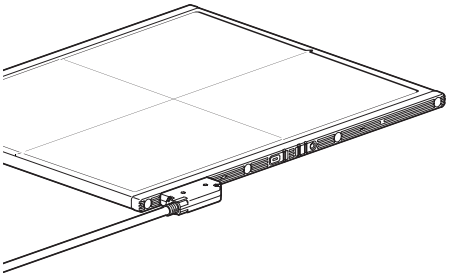

When the AeroDR UF Cable is connected

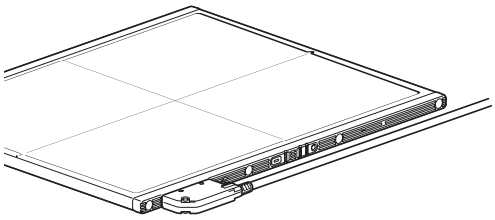

3 Confirm that the AeroDR Detector icon is displayed on the image processing controller.

3.4.4 Selection of the AeroDR Detector

An AeroDR Detector is selected as follows depending on the number registered on each image processing controller.

Number of registered AeroDR Detectors	Selection method
1	• AeroDR Detector is selected automatically when that AeroDR Detector is ready to be selected. • The AeroDR Detector is not selected if it is not set in a wall stand or table that matches the order information.
Multiple	• The AeroDR Detector that was selected immediately beforehand will be selected automatically if it is ready to be selected. • If there is no AeroDR Detector in the wall stand or table that matches the order information, no AeroDR Detector will be selected.

HINT

- The LED (green) of the selected AeroDR Detector is lit.

3.4.5 Manual selection of the AeroDR Detector

Selecting the AeroDR Detector manually is performed with the following procedure.

1 Press the selection switch of the AeroDR Detector that will be used for 2 seconds or longer.

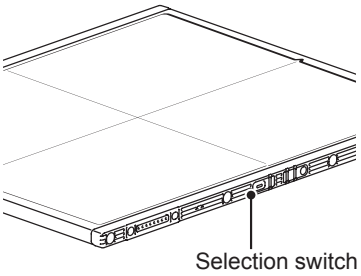

2 After selection is completed, the LED (green) of the AeroDR Detector is lit.

Reference

- The AeroDR Detector can also be selected manually from the image processing controller. For details, refer to the "Operation Manual" of the image processing controller.

3.5 ● Calibration

In order for the AeroDR Detector to provide optimal images, perform the calibration every three months.
The calibration is performed with the image processing controller.

IMPORTANT

- It is necessary to perform the gain calibration periodically to compensate for changes over time or changes in the exposure environment.
- Fully charge the AeroDR Detector before the calibration.
- Perform by waiting at least 10 minutes after the previous exposure.

Reference

- For the calibration, refer to the "User Tool Operation Manual" or the "Operation Manual" of the image processing controller.

3.6 ● Position to affix AeroDR Detector identification label

When using more than 1 AeroDR Detector and affixing identification labels (stickers) to the outside of the AeroDR Detectors, it is recommended to affix the labels to the 2 places ((1), (2)) shown as follows.

Position to affix AeroDR Detector identification label

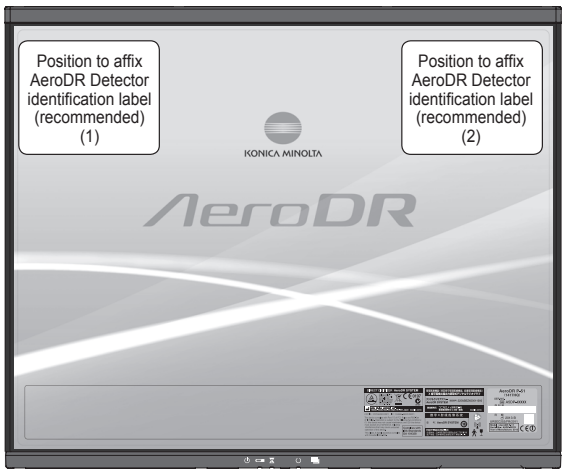

IMPORTANT

- Affix the labels only in the recommended places. Failure to do so may cause the labels to come off or image unevenness to occur.

HINT

- Use of commercially available vinyl (Tepra, etc.) labels are recommended for the identification labels (stickers). When possible, use labels that do not easily peel off.
- It is recommended to write the name and identification number registered in the image processing controller on the label.

Chapter 4

Status (LED) Display

This chapter describes the LED display patterns and the status of the respective devices.

4.1 ● LED display of respective devices

Status of the respective devices can be confirmed with LEDs.
Check the status of the respective devices, referring to the "LED display pattern".

LED display pattern

Notation	Display pattern
	Off
	Slow flashing
	Fast flashing
	On

4.1.1 AeroDR Detector

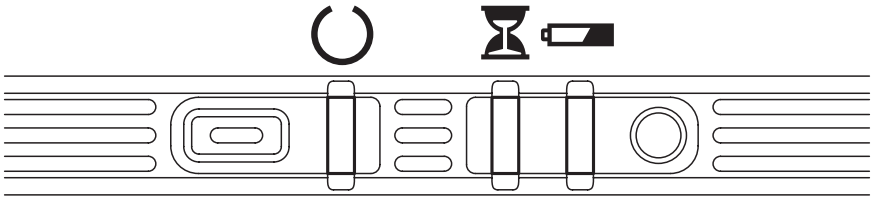

: Status LED (green)

Display pattern	Status
	Shutdown condition
	Standing by
	AeroDR Detector being selected
	Exposing

* During startup/shutdown processing, it also flashes fast and is lit.

: Busy/error LED (orange)

Display pattern	Status
	Shutdown condition or standing by
	Exposing or performing maintenance
	Error occurred

* During startup/shutdown processing, it also flashes fast and is lit.

: Battery LED (blue)

Display pattern	Status
	Shutdown condition or battery level is 10% or above
	Battery level is less than 10%
	Battery level is less than 5%
	Battery level is less than 3%

* During startup/shutdown processing, it also flashes fast and is lit.

4.1.2 AeroDR Interface Unit

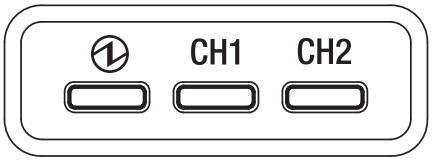

⏻ : Power LED (green)

Display pattern	Status
	Shutdown condition
	Operating

CH1 : Feeding1 LED (blue)

Display pattern	Status
	Shutdown condition or feeding1 is not connected to the AeroDR Detector
	The AeroDR Detector is connected to feeding1

CH2 : Feeding2 LED (blue)

Display pattern	Status
	Shutdown condition or feeding2 is not connected to the AeroDR Detector
	The AeroDR Detector is connected to feeding2

4.1.3 AeroDR Interface Unit2

Detector Connection LED

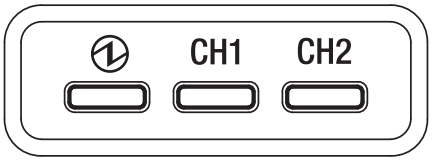

⏻ : Power LED (green)

Display pattern	Status
	Shutdown condition
	Operating

CH1 : Feeding1 LED (blue)

Display pattern	Status
	Shutdown condition or feeding1 is not connected to the AeroDR Detector
	The AeroDR Detector is connected to feeding1

CH2 : Feeding2 LED (blue)

Display pattern	Status
	Shutdown condition or feeding2 is not connected to the AeroDR Detector
	The AeroDR Detector is connected to feeding2

Generator Interface LED

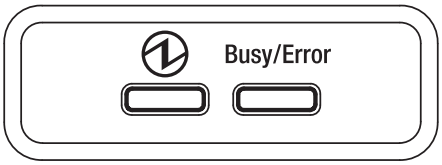

⏻ : Power LED (green)

Display pattern	Status
	Shutdown condition
	Operating and not connected to the image processing controller
	Operating and connected to the image processing controller

Busy/Error : Busy/error LED (orange)

Display pattern	Status
	Shutdown condition or standing by
	Exposing or performing maintenance
	Error occurred

4.1.4 AeroDR Generator Interface Unit

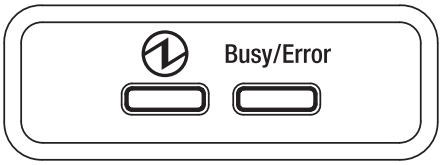

⏻ : Power LED (green)

Display pattern	Status
	Shutdown condition
	Operating and not connected to the image processing controller
	Operating and connected to the image processing controller

Busy/Error : Busy/error LED (orange)

Display pattern	Status
	Shutdown condition or standing by
	Exposing or performing maintenance
	Error occurred

4.1.5 AeroDR Battery Charger

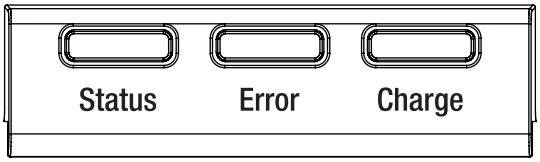

Status : Status LED (green)

Display pattern	Status
	Shutdown condition
	Operating
	Registration processing of the inserted AeroDR Detector is complete

* Because the charger dedicated for charging does not perform registration processing of the AeroDR Detector, the status LED always flashes slowly.

Error : Error LED (orange)

Display pattern	Status
	Shutdown condition or operating normally
	Error occurred

Charge : Feeding LED (blue)

Display pattern	Status
	Shutdown condition or standing by for insertion of the AeroDR Detector Battery charged during AeroDR Detector insertion
	AeroDR Detector battery charging

4.1.6 AeroDR Battery Charger2

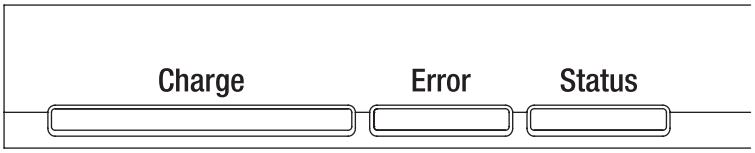

Charge: Feeding LED (blue)

Display pattern	Status
	Shutdown condition or standing by for insertion of the AeroDR Detector
	AeroDR Detector battery charging (battery level is less than 2%)
	AeroDR Detector battery charging (battery level is 3 to 49%)
	AeroDR Detector battery charging (battery level is 50 to 79%)
	AeroDR Detector battery charging (battery level is higher than 80%)

Error : Error LED (orange)

Display pattern	Status
	Shutdown condition or operating normally
	Error occurred

Status : Status LED (green)

Display pattern	Status
	Shutdown condition
	Operating
	Registration processing of the inserted AeroDR Detector is complete

* Because the charger dedicated for charging does not perform registration processing of the AeroDR Detector, the status LED always flashes slowly.

4.1.7 Access Point

HINT

- The illustrations and explanation merely shows an example.

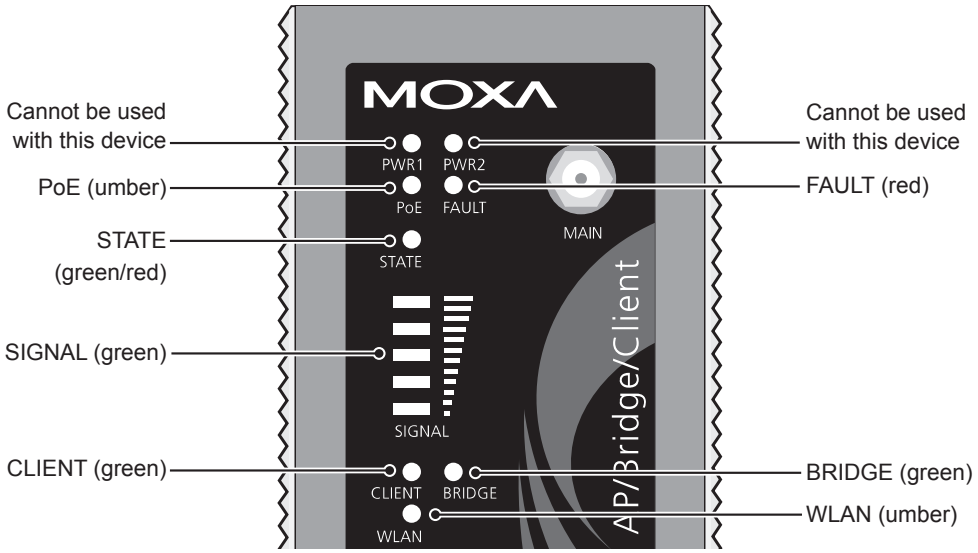

LED	Lighting color	Lighting pattern	Status
PoE	Umber	On	Power is being supplied.
FAULT	Red	Flashing	Error is occurring.
STATE	Green/ Red	Green/on	Lights when operation preparation is completed.
		Red/on	Error is occurring.
SIGNAL	Green	On	Signal strength of wireless. (Only in client mode)
BRIDGE	Green	On	Operating in bridge mode.
CLIENT	Green	On	Operating in client mode.
WLAN	Umber	On	Operating in wireless LAN mode. (Normal)

Chapter 5

Troubleshooting

This chapter describes problems that may occur and error codes that may be displayed, and how to resolve each of them.

5.1 ● Support flow during trouble

If the following problems occur with any of these devices, consult the respective references for countermeasures.

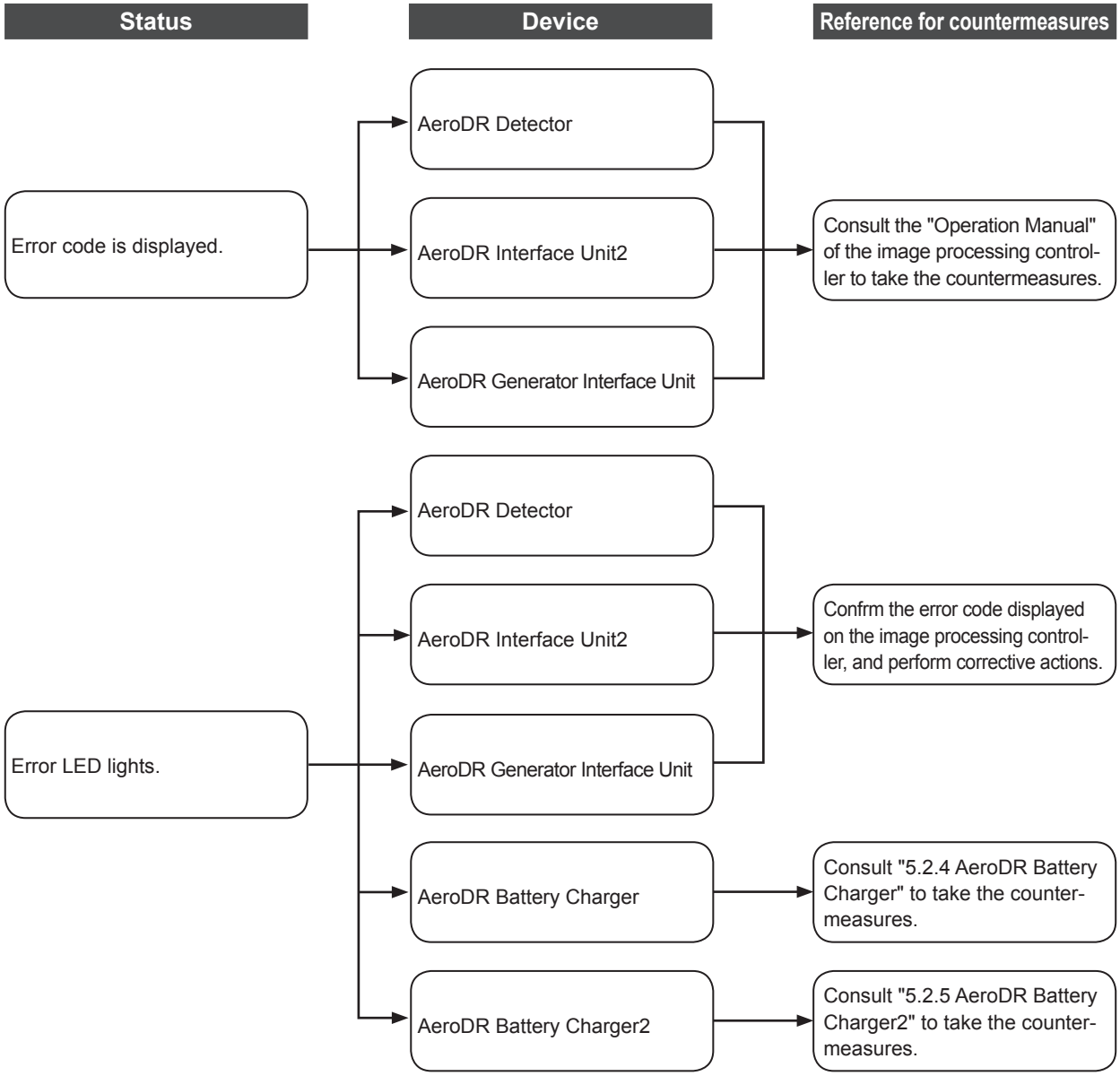

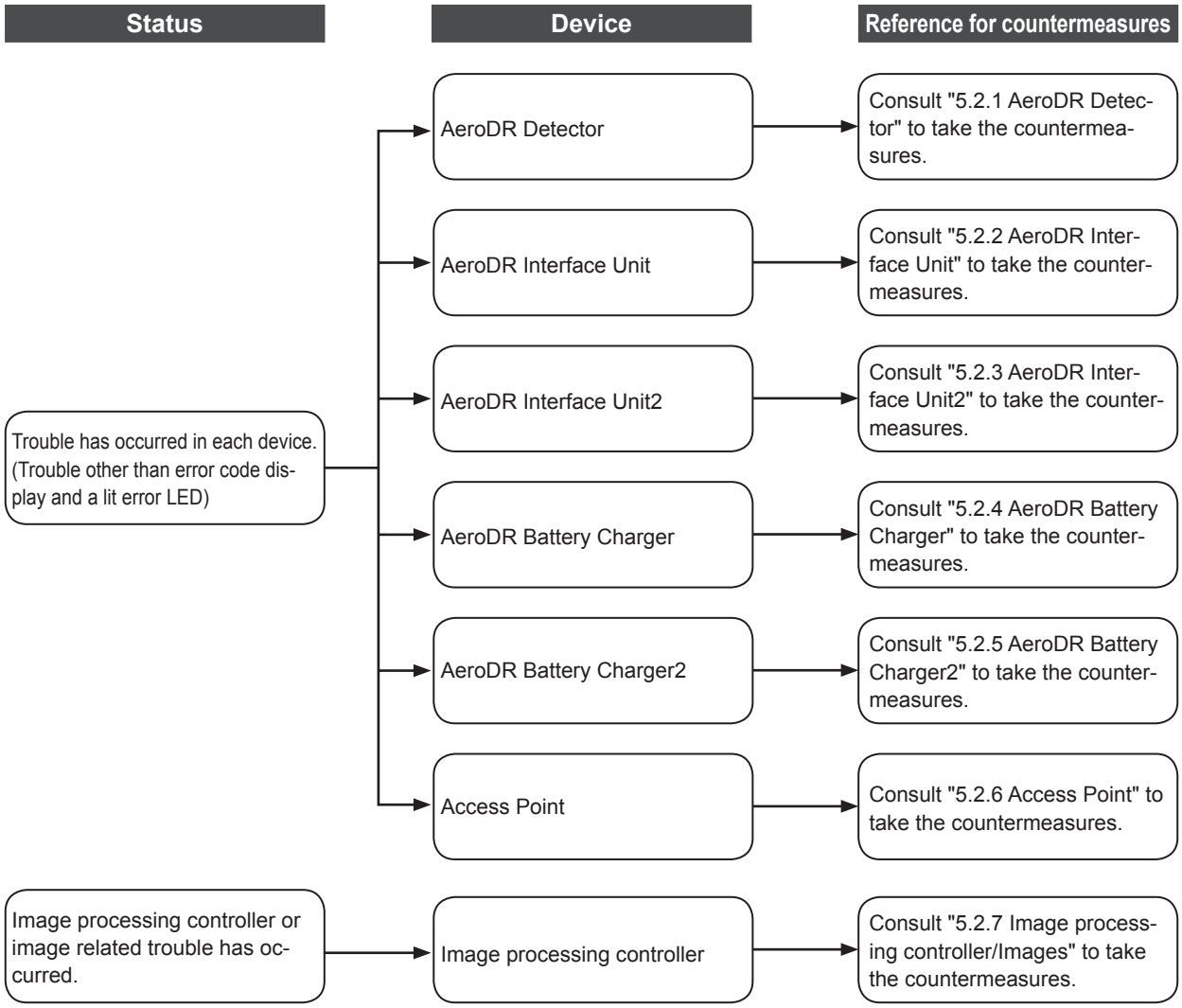
Status
Device
Reference for countermeasures
Trouble has occurred in each device. (Trouble other than error code display and a lit error LED)
AeroDR Detector
Consult "5.2.1 AeroDR Detector" to take the countermeasures.
AeroDR Interface Unit
Consult "5.2.2 AeroDR Interface Unit" to take the countermeasures.
AeroDR Interface Unit2
Consult "5.2.3 AeroDR Interface Unit2" to take the countermeasures.
AeroDR Battery Charger
Consult "5.2.4 AeroDR Battery Charger" to take the countermeasures.
AeroDR Battery Charger2
Consult "5.2.5 AeroDR Battery Charger2" to take the countermeasures.
Access Point
Consult "5.2.6 Access Point" to take the countermeasures.
Image processing controller or image related trouble has occurred.
Image processing controller
Consult "5.2.7 Image processing controller/Images" to take the countermeasures.

5.2 ● Various problems and countermeasures

If the following problems occur with any of these devices, consult the respective references for countermeasures.

IMPORTANT

- After performing countermeasures, if the problem does not go away, contact Konica Minolta technical representatives.

HINT

- When an error message has been displayed in the image processing controller, check the error description and countermeasures listed in the "Operation Manual" of the image processing controller.

5.2.1 AeroDR Detector

Status	Error description	Corrective actions
The AeroDR Detector does not start up.	Power does not go on even when the power switch is pressed for 2 seconds or longer.	The battery might be out. Charge it as follows. Then, start it. • Inserting it into the AeroDR Battery Charger for more than 2 minutes • Inserting it into the AeroDR Battery Charger2 for more than 6 minutes • Connecting a wired cable for more than 6 minutes
The AeroDR Detector does not shut down.	Power does not go off even when the power switch is pressed for 5 seconds or longer.	It is not possible to shut down while exposing. Shut down after exposure is ended.
The status LED (green) is lit, and the busy/error LED (orange) flashes rapidly. ("Ready" is not displayed on the image processing controller)	System error is occurring.	If a busy/error LED (orange) continues to flash after 10 minutes has elapsed, shut down the AeroDR Detector. Or, when "Ready" is not displayed on the image processing controller, restart it.
When the AeroDR Detector is placed on a smooth surface, the AeroDR Detector is not stably attached to the smooth surface.	AeroDR Detector is warped.	If the AeroDR Detector is still warped even after the detector is placed on a smooth surface, contact Konica Minolta technical representatives.
	The protective cover is deformed.	Contact Konica Minolta technical representatives.
The AeroDR Detector will not go into the wall stand or table.	AeroDR Detector is warped.	If the AeroDR Detector is still warped even after the detector is placed on a smooth surface, contact Konica Minolta technical representatives.
	The protective cover is deformed.	Contact Konica Minolta technical representatives.
The AeroDR Detector cannot be inserted in the AeroDR Battery Charger/AeroDR Battery Charger2.	The protective cover is deformed.	
	Foreign material is in the wired connection connector of the AeroDR Detector.	Refer to "6.1.2 Cleaning" and remove the foreign material.
	Foreign material is in the bottom of the AeroDR Battery Charger/AeroDR Battery Charger2.	Contact Konica Minolta technical representatives.
The AeroDR I/F Cable cannot be connected to the AeroDR Detector.	Part of the wired connection connector of the AeroDR Detector is deformed.	
	The spring connector of the AeroDR I/F Cable is deformed.	

Status	Error description	Corrective actions
The AeroDR I/F Cable cannot be connected to the AeroDR Detector.	Foreign material is in the wired connection connector of the AeroDR Detector.	Refer to "6.1.2 Cleaning" and remove the foreign material.
	Foreign material is in the spring connector on the AeroDR I/F Cable.	
The shockwatch changes color to red.	Possible excessive shock to AeroDR Detector.	Contact Konica Minolta technical representatives.
Only wired connection with the AeroDR Detector cannot be used.	The wired cable is not connected properly.	Check that the wired cable is properly connected to the AeroDR Detector.
Only wireless connection with the AeroDR Detector cannot be used.	There is an error in the Access Point.	Check that the Ethernet cable is properly connected to the Access Point.
	The AeroDR Detector and Access Point are being used under poor conditions. • Wireless does not connect • Wireless communication terminates • Cycle time is extended	Check the installation location of AeroDR Detector and Access Point. When performance is noticeably lower than at the initial installation of this device, it is possible that the installation environment/usage environment have changed.
AeroDR Detector wired connection connector is hearted up.	AeroDR Detector wired connection connector is heated up immediately after charging with AeroDR Battery Charger/AeroDR Battery Charger2.	This is caused by charging and is not a malfunction.
Charging sometimes takes longer.	Charging takes longer when the battery is over discharged.	It takes time for internal components to start. Because it is not abnormal, wait a bit.
Battery LED (blue) flashes fast.	Usage time with the battery has gotten shorter.	It could be that the charging function of the battery has deteriorated. It can be replaced with a new battery for a fee if necessary.
	The number of images that can be exposed has decreased.	
	The charging time has gotten shorter.	
No image is acquired.*	No image appears after X-ray exposure.	(1) Check the following items. • Did you perform exposure in "Ready" status? • Are the exposure conditions correct? • Was X-ray output lowered? • Was X-ray voltage set to a lower value? (2) Set the sensitivity setting of the image processing controller to "High" before exposure. If the setting was already at "High", increase the voltage of the X-ray and perform exposure.
Reading has automatically started. *	The machine starts reading the image without X-ray exposure.	(1) Check the following items. • Was the AeroDR Detector subjected to strong shocks or vibrations while "Ready" was displayed? • Is the sensitivity setting of the image processing controller correct? (Is the sensitivity setting of the image processing controller [High]?) (2) Use caution to prevent strong shocks or vibrations and restart exposure.
Exposure was performed in a condition other than when the exposure with the image processing controller was possible.*	Exposure was performed when "Ready" was not displayed on the image processing controller. Consequently, a correct image was not acquired.	Wait for one minute or more before starting the next exposure.
	Exposure was performed when "Ready" was not displayed.	Wait for 30 seconds or more before starting the next exposure.

* Troubleshooting in the Aero Sync mode.

IMPORTANT

- If the exterior or protective cover is damaged extensively, or in the event of the AeroDR Detector being dropped or subjected to shock, contact Konica Minolta technical representatives.

5.2.2 AeroDR Interface Unit

Status	Error description	Corrective actions
Power LED (green) does not light.	AC power not supplied.	Make sure the power cable is connected correctly.
Feeding1/2 LED (blue) does not light.	Feeding1/2 LED (blue) does not light even when connecting the AeroDR Detector.	Make sure that the AeroDR I/F Cable is connected correctly.
Communications are down between devices, and power LED (green) is off.	The power switch is not on. Or, the power cable is not connected.	Make sure the power switch of the AeroDR Interface Unit is on. Or, make sure the power cable is connected correctly.
The AeroDR Detector is being used with wired connection, but it is not recognized on the image processing controller, and feeding1/2 LEDs (blue) are off.	The AeroDR I/F Cable is not connected.	Make sure that the AeroDR I/F Cable is connected to the AeroDR Detector properly.
Battery is not charging while the AeroDR Detector is used with wired connection (the battery level on the battery level display of the image processing controller does not increase), and feeding1/2 LEDs (blue) are off.		

5.2.3 AeroDR Interface Unit2

Status	Error description	Corrective actions
Power LED (green) does not light.	AC power not supplied.	Make sure the power cable is connected correctly.
Feeding1/2 LED (blue) does not light.	Feeding1/2 LED (blue) does not light even when connecting the AeroDR Detector.	Make sure that the AeroDR I/F Cable is connected correctly.
Communications are down between devices, and power LED (green) is off.	The power switch is not on. Or, the power cable is not connected.	Make sure the power switch of the AeroDR Interface Unit2 is on. Or, make sure the power cable is connected correctly.
The AeroDR Detector is being used with wired connection, but it is not recognized on the image processing controller, and feeding1/2 LEDs (blue) are off.	The AeroDR I/F Cable is not connected.	Make sure that the AeroDR I/F Cable is connected to the AeroDR Detector properly.
Battery is not charging while the AeroDR Detector is used with wired connection (the battery level on the battery level display of the image processing controller does not increase), and feeding1/2 LEDs (blue) are off.		

5.2.4 AeroDR Battery Charger

Status	Error description	Corrective actions
Status LED (green) does not light.	AC power not supplied.	Make sure that the power cable is connected correctly.
Error LED (orange) is on.	-	Contact Konica Minolta technical representatives.
When the AeroDR Detector is set, the error LED (orange) lights.	AeroDR Detector was inserted the wrong way.	Check the insertion orientation of the AeroDR Detector.
	The AeroDR Detector is not set correctly.	Make sure that the AeroDR Detector is set correctly.
Although the AeroDR Detector is inserted, charging does not start, and the status LED (green) is out.	AC power not supplied.	Make sure that the power cable is connected correctly.
Although the AeroDR Detector is inserted, it cannot be registered, and the status LED (green) is flashing.	The Ethernet cable is disconnected.	Make sure that the Ethernet cable is connected correctly.

5.2.5 AeroDR Battery Charger2

Status	Error description	Corrective actions
Status LED (green) does not light.	AC power not supplied.	Make sure that the power cable is connected correctly.
	The power switch is turned off.	Turn on the power switch.
Error LED (orange) is on.	-	Contact Konica Minolta technical representatives.
When the AeroDR Detector is set, the error LED (orange) lights.	AeroDR Detector was inserted the wrong way.	Check the insertion orientation of the AeroDR Detector.
	The AeroDR Detector is not set correctly.	Make sure that the AeroDR Detector is set correctly.
Although the AeroDR Detector is inserted, charging does not start, and the status LED (green) is out.	AC power not supplied.	Make sure that the power cable is connected correctly.
	The power switch is turned off.	Turn on the power switch.
Although the AeroDR Detector is inserted, it cannot be registered, and the status LED (green) is flashing.	The Ethernet cable is disconnected.	Make sure that the Ethernet cable is connected correctly.

5.2.6 Access Point

If a problem occurs in the Access Point, contact Konica Minolta technical representatives.

5.2.7 Image processing controller/Images

Status	Error description	Corrective actions
Transverse (noise) has gotten into all images acquired from the AeroDR Detector.	The wired cable is not connected properly.	Connect the wired cable spring connector unit horizontally to the wired connector of the AeroDR Detector.
Operation is normal, but problems can be seen with exposure images.	It has been occurring frequently since a certain time.	Perform calibration.
	There is trouble in only 1 image.	Check the exposure method and image processing.
Cannot expose with the image processing controller.	The image processing controller does not become Ready.	Check the image processing controller start up.
	The icons of devices used on the image processing controller are not displayed.	Confirm that the icon of the device to be used is displayed on the system monitor screen. When the icon of the device is not displayed, check that the device to be used is started. Or, check that the Ethernet cable is properly connected.

Chapter 6

Maintenance

This chapter describes the items that require periodic maintenance.

6.1 ● Maintenance and inspection items

This chapter describes the inspections and cleaning required in order to maintain the use of this device in an optimum condition.

HINT

- "Simple Check QC for CS-7" is available for checking of imaging quality. Please contact our customer service for the detail.

6.1.1 Maintenance schedule

The maintenance and inspection items that the user should perform are as follows.

Maintenance task	Maintenance interval
Checking and cleaning the surface of the AeroDR Detector	Weekly
Checking for external damage to the AeroDR Detector	Weekly
Cleaning the spring connectors of the AeroDR Battery Charger2, AeroDR I/F Cable and AeroDR UF Cable	Weekly
Cleaning the wired connection connectors of the AeroDR Detector and AeroDR UF Cable	Weekly
Cleaning the AeroDR Battery Charger/ AeroDR Battery Charger2	Weekly
Full charge of the AeroDR Detector	Monthly
Calibration	Every 3 months

IMPORTANT

- To ensure optimum use of this device, be sure to perform periodic maintenance.
- The above task intervals are estimates and vary according to usage.

Reference

- For the calibration, refer to the "User Tool Operation Manual" or the "Operation Manual" of the image processing controller.

6.1.2 Cleaning

The cleaning methods of the respective devices are as follows.

IMPORTANT

- Be careful not to apply any cleaning chemical or liquid onto the spring connectors, the wired connection connectors, and the LEDs.
- Do not clean with sharp or hard metal objects. If you cannot remove stains, contact Konica Minolta technical representatives.
- Wear and deformation of the protective cover will occur with the AeroDR Detector due to the way it is handled. The protective cover can be replaced for a fee when the damage becomes extensive, so contact Konica Minolta technical representatives.

● AeroDR Detector

- Clean the exterior with a soft lint-free cloth dampened with a small amount of anhydrous ethanol and wrung well.
- To clean the gap between the exterior of the AeroDR Detector and the protective cover, remove dirt using a commercial plastic brush.

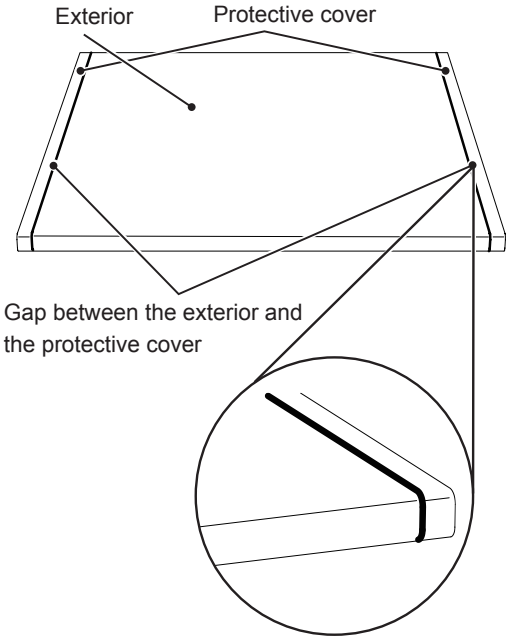

IMPORTANT

- If you directly apply or spray anhydrous ethanol on the AeroDR Detector, the liquid will enter the AeroDR Detector through exterior gaps, causing a failure.

● Spring connector

- If foreign material has adhered to the spring connectors of the AeroDR Battery Charger2, AeroDR I/F Cable and AeroDR UF Cable, remove it with a commercial plastic brush.

AeroDR Battery Charger2

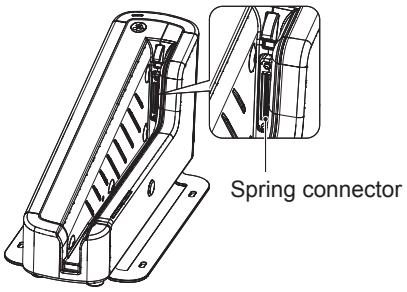

AeroDR I/F Cable

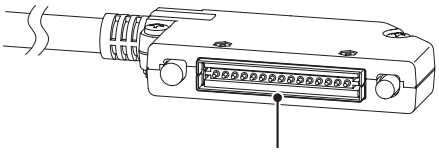

AeroDR UF Cable

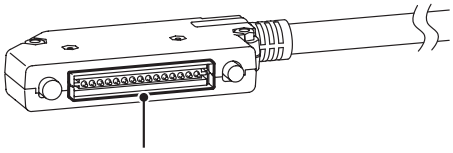

● Wired connection connector

- If foreign material has adhered to the wired connection connectors of the AeroDR Detector and AeroDR UF Cable, remove it with a commercial plastic brush.

AeroDR Detector

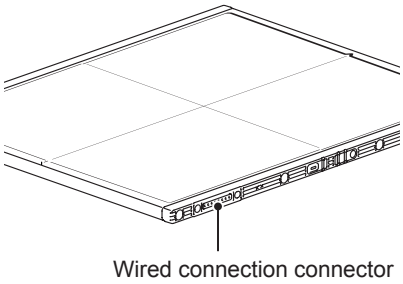

AeroDR UF Cable

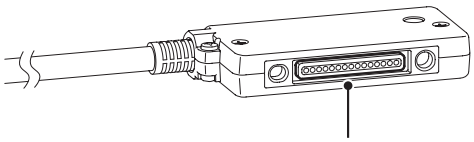

● AeroDR Battery Charger

- Clean dust on the insert table of the AeroDR Battery Charger with a soft lint-free cloth dampened with alcohol or water and wrung well.

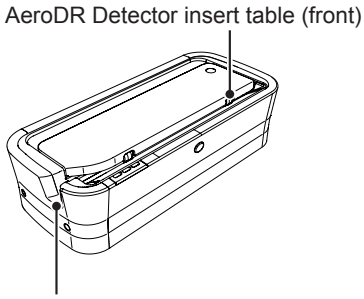

● AeroDR Battery Charger2

- Clean dust on the insert table of the AeroDR Battery Charger2 with a soft lint-free cloth dampened with alcohol or water and wrung well.

6.1.3 Disinfection of the AeroDR Detector

If bodily fluid or blood from a patient has contaminated the surface of the AeroDR Detector, disinfect with a soft lint-free cloth dampened with a small quantity of the following disinfectant and wrung well.

- Ethanol for disinfection
- Isopropanol for disinfection
- Commercial chlorine bleach, or 0.5% hypochlorite (10-fold dilution of household bleach)

IMPORTANT

- Bleach and hypochlorite are corrosive, so wash the bleach off well to avoid corrosion.
- Be careful not to apply any chemical for disinfection onto the wired connection connectors and the LEDs.
- If you directly apply or spray chemical for disinfection on the AeroDR Detector, the solution will enter the instrument through exterior gaps, causing a failure.

6.1.4 Consumables

IMPORTANT

- Refer to each device's manual for information about periodic replacement parts and consumables for the image processing controller, etc.
- In particular, continued use of the battery may result in degradation and wear, and it may no longer exhibit proper functioning capabilities. For extended, safe use, it is necessary to replace parts which have become worn or degraded.

Chapter 7

Specifications

This chapter describes the specifications of this device.

7.1 ● Specifications

IMPORTANT

- The following specifications and graphs described below are nominal values which may be different from actual values and may vary depending on environment and frequency of use. (These are not to provide any guarantees.)
- All specification regarding battery is for a fully-charged battery.

7.1.1 AeroDR Detector

Item	Description
Product name (model name)	AeroDR 1417HQ (AeroDR P-11) AeroDR 1417S (AeroDR P-12) AeroDR 1717HQ (AeroDR P-21) AeroDR 1012HQ (AeroDR P-31) AeroDR II 1417HQ (AeroDR P-51)
Detection method	Indirect conversion method
Scintillator	CsI (Cesium Iodide)
External dimensions	AeroDR 1417HQ/AeroDR 1417S/ AeroDR II 1417HQ 383.7(W)×460.2(D)×15.9(H)mm 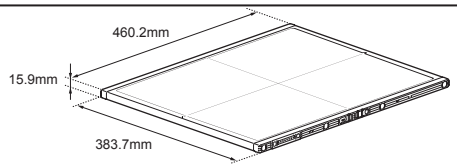 AeroDR 1717HQ 459.8(W)×460.2(D)×15.9(H)mm 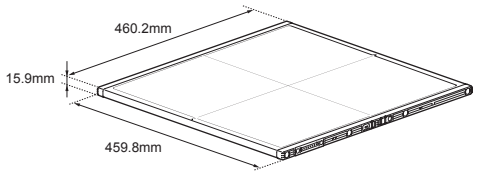 AeroDR 1012HQ 281.8(W)×333.0(D)×15.9(H)mm 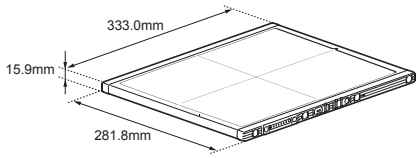
Weight	AeroDR 1417HQ : 2.9kg AeroDR 1417S : 2.8kg AeroDR 1717HQ : 3.6kg AeroDR 1012HQ : 1.7kg AeroDR II 1417HQ : X.Xkg
Pixel size	175 um
Image area size	AeroDR 1417HQ/AeroDR 1417S/AeroDR II 1417HQ: 348.95×425.25mm (1,994×2,430 pixels) AeroDR 1717HQ: 424.9×424.9mm (2,428×2,428 pixels) AeroDR 1012HQ: 245.7×296.8mm (1,404×1,696 pixels)
AD conversion	16 bit (65,536 gradients)
Usable grid frequency	40lp/cm, 34lp/cm * For details, refer to " 3.2.3 Precautions for exposure".

Item	Description
Maximum patient weight	Point load: 150kg@Φ40mm 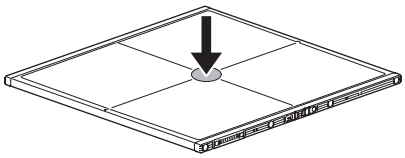 Face load: 300kg@effective image area overall 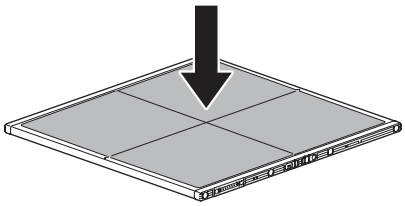 * Deadweight, even when loaded on the AeroDR Detector, has no effect on images and the AeroDR Detector. The measurement method is based on KM standards.
Communication	AeroDR 1417HQ/AeroDR 1417S/AeroDR 1717HQ/AeroDR 1012HQ: Dedicated wired Ethernet connection / wireless LAN (IEEE802.11a compliant) AeroDR II 1417HQ: Dedicated wired Ethernet connection / wireless LAN (IEEE802.11a/b/g/h compliant)
Drive power	Dedicated power cable drive / battery drive
WLAN encryption	Wireless encryption method : AES Authentication method : WPA2-PSK
Patient doses	Patient doses are equivalent to 500-1000 speed film/screen systems.
Dynamic range	4 digits 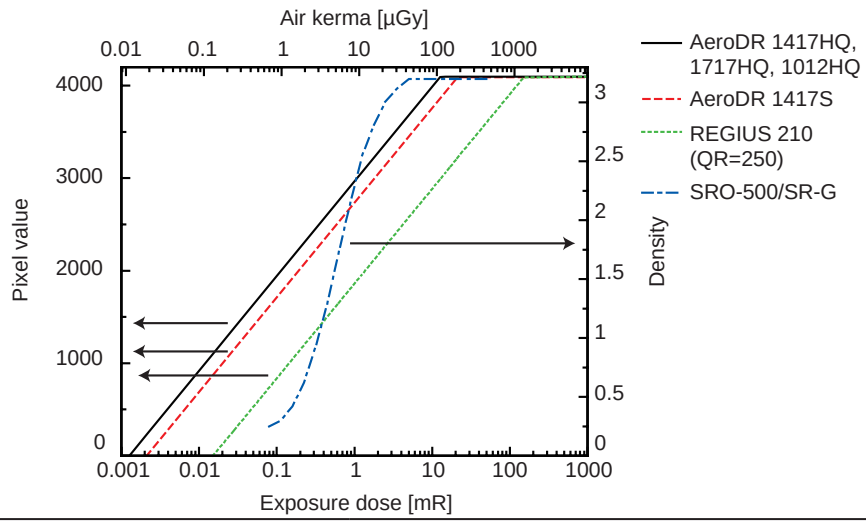
MTF	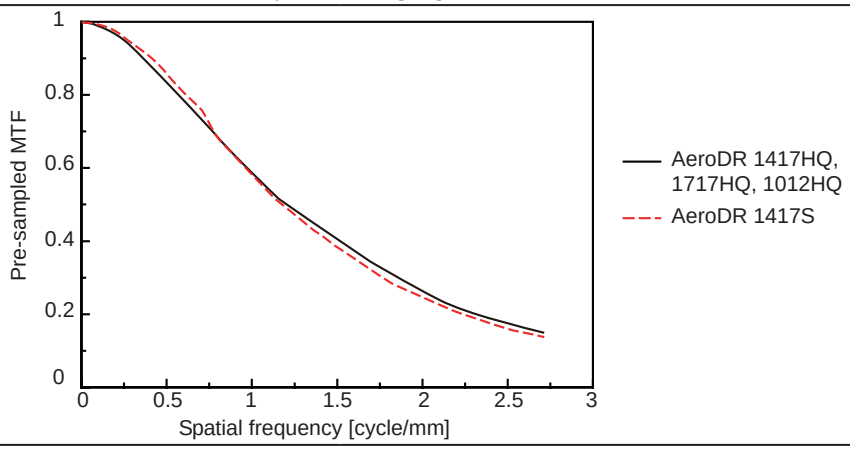

Chapter 7

Item	Description
DQE	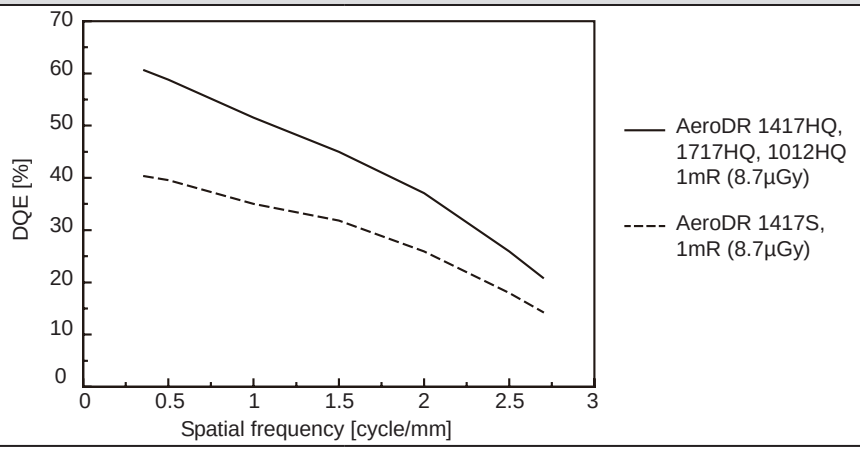
Required time for wired/wireless switching	Less than 2 seconds
Battery type	Lithium ion capacitor
Battery expected lifetime	Above the AeroDR Detector Service life

7.1.2 AeroDR Interface Unit

Item	Description
Product name (model name)	AeroDR Interface Unit (AeroDR B-1)
Amount of connectable AeroDR Detectors	Wired connection: Up to 2 Wireless connection: Up to 4 Access Point is necessary when operating wireless.
Power requirements	AC 100/110/115/120/200/220/230/240 V ± 10%, single phase 50/60 Hz
Power consumption	With the AeroDR Detector connected : Approx. 80 VA (100-240 V) Without the AeroDR Detector connected: Approx. 33 VA (100-240 V)
External dimensions	460(W)×180(D)×285(H)mm 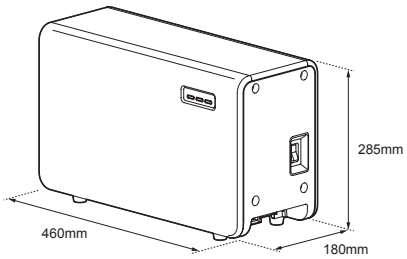
Weight	11.5kg

7.1.3 AeroDR Interface Unit2

Item	Description
Product name	AeroDR Interface Unit2
Amount of connectable AeroDR Detectors	Wired connection: Up to 2 Wireless connection: Up to 4 Access Point is necessary when operating wireless.
Power requirements	AC 100/110/115/120/200/220/230/240 V ± 10%, single phase 50/60 Hz
Power consumption	With the AeroDR Detector connected : Approx. 80 VA (100-240 V) Without the AeroDR Detector connected: Approx. 33 VA (100-240 V)
External dimensions	460(W)×180(D)×285(H)mm 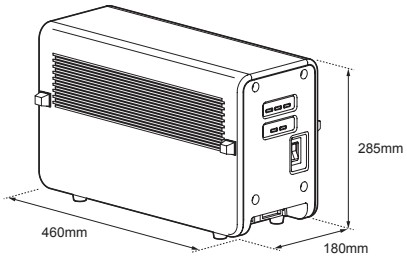
Weight	12.5kg

7.1.4 AeroDR Generator Interface Unit

Item	Description
Product name (model name)	AeroDR Generator Interface Unit (AeroDR X-1)
Power supply	Supplied from the AeroDR Interface Unit via the Ethernet cable.
External dimensions	460(W)×180(D)×285(H)mm 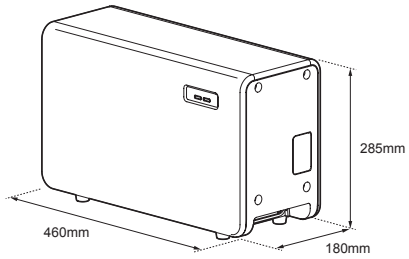
Weight	7.3kg

7.1.5 AeroDR Battery Charger

Item	Description
Product name (model name)	AeroDR Battery Charger (AeroDR D-1)
Battery charging system	Automatic charging
Power requirements	AC 100/110/115/120/200/220/230/240 V ± 10%, single phase 50/60 Hz
Power consumption	Charging: Approx. 161 VA (100-240 V) Standby : Approx. 25 VA (100-240 V)
External dimensions	560(W)×250(D)×153(H)mm 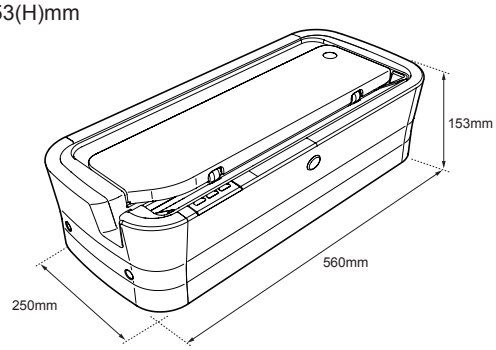
Weight	7.2kg

7.1.6 AeroDR Battery Charger2

Item	Description
Product name	AeroDR Battery Charger2
Battery charging system	Automatic charging
Power requirements	AC 100/110/115/120/200/220/230/240 V ± 10%, single phase 50/60Hz
Power consumption	Charging: 180VA(100-240V) Standby : 30VA(100-240V)
External dimensions	474.2(W)×200(D)×206.7(H)mm 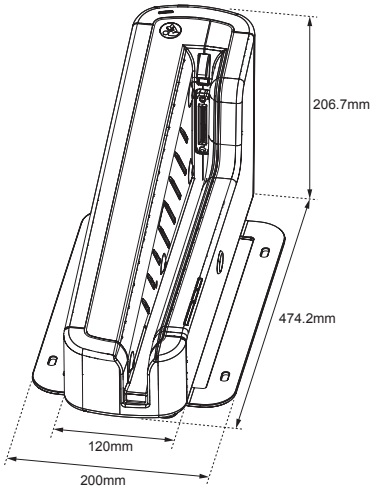
Weight	6kg

7.1.7 Access Point

HINT

- The illustrations and explanation merely shows an example.

Item	Description
External dimensions	53.6(W)×135(H)×105(D)mm (without antenna) 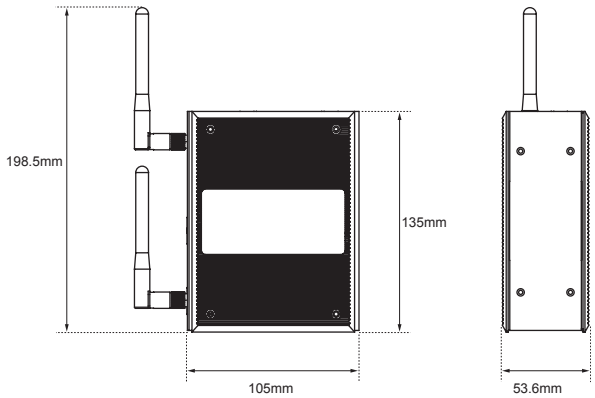
Weight	850g

7.1.8 AeroDR I/F Cable

Item	Description
Product name	AeroDR I/F Cable
Cable length	10m/20m
External dimensions	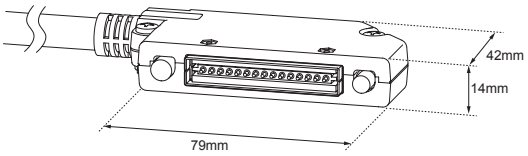

7.1.9 AeroDR UF Cable

Item	Description
Product name	AeroDR UF Cable
Cable length	2m/5m
External dimensions	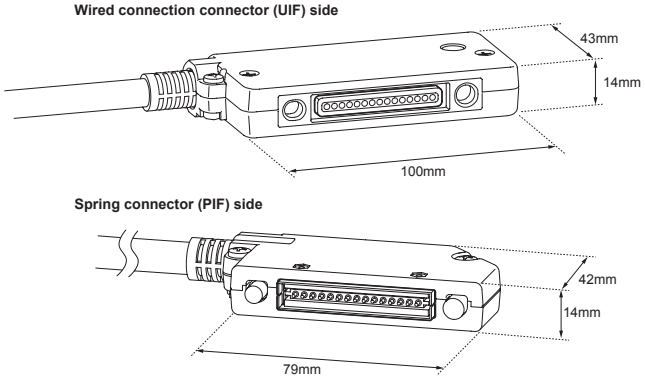

7.1.10 AeroDR XG Cable

Item	Description
Product name	AeroDR XG Cable Set 100V AeroDR XG Cable Set 120V AeroDR XG Cable Set 220V AeroDR XG Cable Set 230V AeroDR XG Cable Set 240V AeroDR XG Cable Set DC24V

7.1.11 AeroDR S-SRM Cable

Item	Description
Product name	AeroDR S-SRM Cable GEX1 AeroDR S-SRM Cable CPX1 AeroDR S-SRM Cable PKX1 AeroDR S-SRM Cable DEX1 AeroDR S-SRM Cable HIX1 AeroDR S-SRM Cable TOX1 AeroDR S-SRM Cable PHX1 AeroDR S-SRM Cable DEX2 AeroDR S-SRM Cable TOX2 AeroDR S-SRM Cable TOX3 AeroDR S-SRM Cable TOX4 AeroDR S-SRM Cable NC AeroDR S-SRM Cable QTX1 AeroDR S-SRM Cable ARX1

- AeroDR S-SRM Cables is subject to change without notice.
- Other AeroDR S-SRM Cables may be added without notice.
- Some AeroDR S-SRM Cables may not be confirmed to comply with MDD.

7.1.12 General AeroDR SYSTEM

Item	Description			
Recommended storage and usage environment conditions	When operating	Temperature: 10 to 30°C (30°C / 10°C)	Humidity: 35 to 80% RH (ensure no water condensation) (80%RH / 35 %RH)	
		* Limit continuous use in a hot and humid environment (35 to 37°C/95% or lower) of an incubator to within 25 minutes.		
	When not operating	Temperature: –10 to 40°C (40°C / –10°C)	Humidity: 20 to 90% RH (ensure no water condensation) (90%RH / 20%RH)	
	In storage/ transport	Temperature: –20 to 50°C* (50°C / –20°C)	Humidity: 20 to 90% RH (ensure no water condensation) (90%RH / 20%RH)	
		* However, performance warranty period when storing at 50°C is 6 months after packing.		
Classification	Safety IEC60601-1 Class I			
Operation mode	Continuous operation			

KONICA MINOLTA MEDICAL IMAGING U.S.A., INC.
411 Newark-Pompton Turnpike, Wayne, NJ 07470, U.S.A.
TEL. 973-633-1500

EC REP
EU Authorized Representative:
KONICA MINOLTA MEDICAL & GRAPHIC IMAGING EUROPE B.V.
Frankfurtstraat 40, 1175 RH Lijnden,
The Netherlands
TEL.+31-20659-0260

KONICA MINOLTA HEALTHCARE INDIA PRIVATE LIMITED
Office No. 515, 5th Floor, C-Wing, 215-Atrium Centre,
Andheri (East), Mumbai 400 059, India
TEL.+91-22-61916969

KONICA MINOLTA BUSINESS SOLUTIONS (CANADA) LTD.
369 Britannia Road East, Mississauga,
Ontario, L4Z 2H5, Canada
TEL. 905-890-6600

KONICA MINOLTA MEDICAL & GRAPHIC (SHANGHAI) CO., LTD.
Unit C1, 11F, Shanghai JunYao International Plaza No. 789,
Zhao Jia Bang Road, Shanghai 200032, China
TEL. 021-6422-2626

A45YBD01EN01

20131220CT