KONICA MINOLTA

AeroDR

Operation Manual

DIRECT DIGITIZER

AeroDR SYSTEM
AeroDR SYSTEM 2
SKR 3000

CE 0197

Manufacturer:
KONICA MINOLTA, INC.
1 Sakura-machi, Hino-shi, Tokyo, 191-8511, Japan

EN 33

Contents

Introduction 5

Introduction 6
USA only. 7
EU member states only 7
Summary of usability specifications (for IEC/EN 60601-1-6, IEC/EN 62366) 8
Disclaimer. 9
Trademark 9
Name correspondence table 10
Term description 11

Chapter 1 Safety Precautions & Warnings. 13

1.1 Symbols relating to safety 14
1.1.1 Safety alert symbol 14
1.1.2 Warning notice (signal words). 14
1.1.3 Description of graphic symbols. 14
1.2 Warning labels 15
1.2.1 DR Detector 15
1.2.2 AeroDR Generator Interface Unit2. . . 16
1.2.3 AeroDR Battery Charger 16
1.2.4 AeroDR Battery Charger2 16
1.3 Safety precautions. 17
1.3.1 Precautions before usage 17
1.3.2 Precautions for usage 17
1.3.3 Precautions regarding electromagnetic waves 22
1.3.4 Precautions regarding wireless communication. 27
1.3.5 Precautions for installing, moving, and storing 29
1.3.6 Precautions regarding maintenance. . . .30
1.3.7 Precautions on service life. 30

Chapter 2 Product Overview 31

2.1 Overview of this device 32
2.1.1 Functions 32
2.1.2 System configuration and connection examples 33
2.2 Component names and functions 41
2.2.1 AeroDR Detector 41
2.2.2 AeroDR 2 Detector. 42
2.2.3 AeroDR 3 Detector. 43
2.2.4 AeroDR Interface Unit 44
2.2.5 AeroDR Interface Unit2 45
2.2.6 Detector Interface Unit. 46
2.2.7 Detector Interface Unit 2 47
2.2.8 Power Supply Unit 48
2.2.9 AeroDR Generator Interface Unit. . . . 49
2.2.10 AeroDR Generator Interface Unit2. . . 50
2.2.11 Generator Interface Unit 3 51
2.2.12 AeroDR Battery Charger 52
2.2.13 AeroDR Battery Charger2 53
2.2.14 AeroDR Access Point. 54
2.2.15 I/F Cable 55
2.2.16 AeroDR UF Cable 55

Chapter 3 General Operations 57

3.1 Startup and shutdown 58
3.1.1 Startup of this device 58
3.1.2 Shutdown of this device. 61
3.2 Operation of DR Detector 65
3.2.1 Exposure with basic connection or Aero Sync connection 65
3.2.2 Exposure under the S-SRM connection example 65
3.2.3 Exposure using Aero Storage 66
3.2.4 Serial exposure 69
3.2.5 DR Detector orientation 69
3.2.6 Precautions for exposure. 70
3.3 Charging of DR Detector 76
3.3.1 Charging with AeroDR Battery Charger . . 76
3.3.2 Charging with AeroDR Battery Charger2 77
3.3.3 Charging with the wired cable 78
3.3.4 Charging time guide. 79
3.3.5 DR Detector battery level display. 80
3.4 Registration and selection of the DR Detector. 81
3.4.1 Registration with AeroDR Battery Charger 81
3.4.2 Registration with AeroDR Battery Charger2 82
3.4.3 Registration with the wired cable 82
3.4.4 Selection of the DR Detector 83
3.4.5 Manual selection of the DR Detector 83
3.5 Calibration 84
3.6 Position to affix DR Detector identification label and AeroDR Grip sheet 85
3.6.1 Position to affix DR Detector identification label 85
3.6.2 AeroDR Grip sheet. 85

Chapter 4
Status (LED) Display 87

4.1 LED display of respective devices. 88
4.1.1 AeroDR Detector 89
4.1.2 AeroDR 2 Detector. 90
4.1.3 AeroDR 3 Detector. 91
4.1.4 AeroDR Interface Unit 94
4.1.5 AeroDR Interface Unit2 95
4.1.6 Detector Interface Unit/Detector Interface Unit 2. 96
4.1.7 Power Supply Unit 96
4.1.8 AeroDR Generator Interface Unit. . . . 97
4.1.9 AeroDR Generator Interface Unit2. . . 97
4.1.10 Generator Interface Unit 3 98
4.1.11 AeroDR Battery Charger 98
4.1.12 AeroDR Battery Charger2 99
4.1.13 AeroDR Access Point. 100

Chapter 5
Troubleshooting. 101

5.1 Support flow during trouble 102
5.2 Various problems and countermeasures 104
5.2.1 DR Detector 104
5.2.2 AeroDR Interface Unit 108
5.2.3 AeroDR Interface Unit2 109
5.2.4 Detector Interface Unit. 109
5.2.5 Detector Interface Unit 2 110
5.2.6 Power Supply Unit 110
5.2.7 AeroDR Generator Interface Unit. . . 110
5.2.8 AeroDR Generator Interface Unit2. . 111
5.2.9 Generator Interface Unit 3 111
5.2.10 AeroDR Battery Charger 111
5.2.11 AeroDR Battery Charger2 112
5.2.12 AeroDR Access Point. 112
5.2.13 Image processing controller/Images . .112

Chapter 6
Maintenance 113

6.1 Maintenance and inspection items 114
6.1.1 Maintenance schedule. 114
6.1.2 Cleaning. 114
6.1.3 Disinfection of the DR Detector 117
6.1.4 Consumables. 117
6.1.5 AeroDR Grip sheet affixing and replacement 117

Chapter 7
Specifications 119

7.1 Specifications 120
7.1.1 DR Detector 120
7.1.2 AeroDR Interface Unit 124
7.1.3 AeroDR Interface Unit2 124
7.1.4 Detector Interface Unit. 125
7.1.5 Detector Interface Unit 2 125
7.1.6 Power Supply Unit 126
7.1.7 AeroDR Generator Interface Unit. . . 126
7.1.8 AeroDR Generator Interface Unit2. . 127
7.1.9 Generator Interface Unit 3 127
7.1.10 AeroDR Battery Charger 128
7.1.11 AeroDR Battery Charger2 128
7.1.12 AeroDR Access Point. 129
7.1.13 I/F Cable 129
7.1.14 AeroDR UF Cable 130
7.1.15 Cables and minor components 131
7.1.16 AeroDR SYSTEM 132
7.1.17 AeroDR SYSTEM 2 132
7.1.18 SKR 3000. 133
7.1.19 Label 134

Introduction

Introduction

The digital radiography AeroDR SYSTEM, AeroDR SYSTEM 2 and SKR 3000 (hereinafter, both are referred to as this device) perform X-ray imaging of the human body using an X-ray planar detector that outputs a digital signal, which is then input into an image processing device, and the acquired image is then transmitted to a filing system, printer, and image display device as diagnostic image data.

- This Device is not intended for use in mammography.
- This device is also used for carrying out exposures on children.

The CS-7 or ImagePilot (hereafter referred to as the image processing controller), which controls the receiving, processing, and output of image data, is required for operation. For the operation of the image processing controller, refer to the "Operation Manual" of the image processing controller. Also, regarding the connectable devices, contact Konica Minolta technical representative.

This operation manual provides instructions on the basic functions for operation of this device. Those operating this device for the first time should read this manual beforehand.
Also, store this manual close to this device after reading it through, so it can be used as a guide to allow optimum operating conditions.

IMPORTANT

- This operation manual (English version) is effective only outside Japan.
- This Operation Manual is common to three types of the digital radiography AeroDR SYSTEM, digital radiography AeroDR SYSTEM 2 and digital radiography SKR 3000.
- If the pages of the operation manual are smudged and illegible, replace it with a new one. (a fee is required.)
- The illustrations in this manual use the AeroDR 3 1417HD and AeroDR Battery Charger2 as the example.

USA only

Indications for Use

This device is indicated for use in generating radiographic images of human anatomy. It is intended to a replace radiographic film/screen system in general-purpose diagnostic procedures.

This device is not indicated for use in mammography, fluoroscopy, and angiography applications.

CAUTION

- Federal law restricts this device to sale by or on the order of a physician.

EU member states only

CAUTION

- Any serious incidents or side-effects that could have occurred in relation to the device should be reported to your Konica Minolta service representative and the EU competent authorities.

Summary of usability specifications (for IEC/EN 60601-1-6, IEC/EN 62366)

(1) Medical purposes
- Provision and reading of disease and injury diagnostic images.

(2) Patient groups
- No patient population exists who uses the device.
- Patient population for the X-ray images read is not specified.

(3) Parts of body or organizations to which the device is mounted or that interact with the device.
- DR Detector contacts the body surfaces of a patient and an operator.
- Devices other than DR Detector contact the body surface of an operator.

(4) Operating principle
- DR Detector forms the still images according to the X-ray energy passing through the human and animal body; after digitizing the exposed image, it is transmitted to the console (the image processing controller) with wired communication or wireless communication.
- In the serial radiography mode, it allows to capture multiple frames of radiography image serially taken by the pulse irradiation from an X-ray generator device during one time. This device continues not to be intended to connect with the x-ray device for mammography, fluoroscopy, angiography and cone-beam CT, and not to be used for such procedures.
- AeroDR Interface Unit and AeroDR Interface Unit2 supply the power to DR Detector, AeroDR Generator Interface Unit, AeroDR Generator Interface Unit2, and access point (radio communication device). It also relays wired communication.
- Detector Interface Unit and Detector Interface Unit 2 supply the power to DR Detector. It also relays wired communication.
- Power Supply Unit supply the power to Detector Interface Unit, Detector Interface Unit 2, AeroDR Generator Interface Unit, AeroDR Generator Interface Unit2 and Generator Interface Unit 3. It also relays wired communication.
- AeroDR Interface Unit2, AeroDR Generator Interface Unit, AeroDR Generator Interface Unit2 and Generator Interface Unit 3 interfaces with an X-ray device.
- Access point (radio communication device) performs a wireless communication with DR Detector.
- The console (the image processing controller) processes the image data into the diagnostic image, and then stores and outputs the images added with the patient information.
- The AeroDR Battery Charger and AeroDR Battery Charger2 charge the DR Detector. It registers the using DR Detector with the exposure room.

(5) Significant physical characteristics
- Refer to "7.1 Specifications".

(6) Significant performance characteristics
- Refer to "2.1 Overview of this device".

(7) User of this device
- No special training is required to use this device. The intended users of this device are as follows.
  A professional in good health with specialist knowledge/qualifications who has fully understood the content of this document. (Such as a doctor or radiological technologist)

Disclaimer

(1) This manual may not be reproduced in whole or in part without the permission of Konica Minolta, Inc.
(2) The contents of this manual may be subject to change without prior notice.
(3) Konica Minolta, Inc. is not responsible for any claims made for malfunction or damage caused by installation, relocation, modification, maintenance, and repair made by anyone except Konica Minolta and contractors designated by Konica Minolta.
(4) Konica Minolta, Inc. is not responsible for any claims made for malfunction or damage to Konica Minolta products, caused by third-party products not installed by Konica Minolta.
(5) Konica Minolta, Inc. is not responsible for any claims made for malfunction or damage caused by maintenance and repair using maintenance parts other than those specified by Konica Minolta.
(6) Konica Minolta, Inc. is not responsible for any claims made for malfunction or damage caused by not observing the precautions and operation methods described in the operation manual.
(7) Konica Minolta, Inc. is not responsible for any claims made for malfunction or damage caused by the environment that is not suitable for the installation requirements such as power source and installation environment described in the Installation Requirement or operation manual.
(8) Konica Minolta, Inc. is not responsible for any claims for malfunction or damage caused by acts of nature such as fires, earthquakes, floods, or lightning strikes.
(9) Konica Minolta, Inc. is not responsible for any claims for malfunction or damage caused by using this device for any purpose other than that specified for this device.
(10) Diagnostic and treatment action is performed under the responsibility of the physician(s). Konica Minolta, Inc. is not responsible for any diagnostic/treatment conditions or diagnostic/treatment results.
(11) Konica Minolta, Inc. is unable to assume any liability relating to the following events arising due to systems infected by computer viruses, worms and other malicious software potentially harmful to computers (hereunder referred to as "malwares"):
  — The erasure, corruption, or unwanted disclosure of data stored within this device, including personal and sensitive patient information.
  — Malfunction of the device or accidents occurring as a result of the malfunction of the device.
  — Infection of other products upon connection with the device, or damages arising therefrom.
(12) Whenever you use this service, you are required to take some security or safety measures for the following items related to the service:
Please understand that Konica Minolta, Inc. is unable to assume liability for certain events, such as malfunctions or incidents of information leakage resulting from such events.
  — Client and network equipment managed by our facility
  — The network and ISP in our facility used for connection with this service
  — Your equipment to be connected to the same network as that of this service
(13) When this device is used, various user and patient data stored within the device and external storage devices must be adequately managed under the full responsibility of the user. Konica Minolta, Inc. is unable to assume any liability relating to damages arising due to leakage of various data at the time of disposal.

Trademark

Company names and product names in this manual are trademarks or registered trademarks of their respective owners.
Please note that ©, ® and ™ marks are omitted hereafter.

Copyright © 2011 - 2021 Konica Minolta, Inc. All Rights Reserved.

Name correspondence table

Operation Manual name			Model name (nameplate name)
DR Detector	AeroDR Detector	AeroDR 1417HQ	AeroDR P-11
		AeroDR 1417S	AeroDR P-12
		AeroDR 1717HQ	AeroDR P-21
		AeroDR 1012HQ	AeroDR P-31
	AeroDR 2 Detector	AeroDR 2 1417HQ	AeroDR P-51
		AeroDR 2 1417S	AeroDR P-52
	AeroDR 3 Detector	AeroDR 3 1417HD	P-61
		AeroDR 3 1717HD	P-71
		AeroDR 3 1012HQ	P-81
		AeroDR 3 1417HD2	P-65
		AeroDR 3 1717HD2	P-75
		AeroDR 3 1417HL	P-85
		AeroDR 3 1417SL	P-82
AeroDR Interface Unit			AeroDR B-1
AeroDR Interface Unit2			AeroDR Interface Unit2
Detector Interface Unit			G-21
Detector Interface Unit 2			G-52
Power Supply Unit			G-11
AeroDR Generator Interface Unit			AeroDR X-1
AeroDR Generator Interface Unit2			AeroDR Generator Interface Unit2
Generator Interface Unit 3			G-51
AeroDR Battery Charger			AeroDR D-1
AeroDR Battery Charger2			AeroDR Battery Charger2
AeroDR Access Point			AeroDR C-1

Term description

Terms	Explanation
DR Detector	Collective term indicating AeroDR 1417HQ, AeroDR 1417S, AeroDR 1717HQ, AeroDR 1012HQ, AeroDR 2 1417HQ, AeroDR 2 1417S, AeroDR 3 1417HD, AeroDR 3 1717HD, AeroDR 3 1012HQ, AeroDR 3 1417HD2, AeroDR 3 1717HD2, AeroDR 3 1417HL, and AeroDR 3 1417SL.
AeroDR Detector	Collective term indicating AeroDR 1417HQ, AeroDR 1417S, AeroDR 1717HQ, and AeroDR 1012HQ.
AeroDR 2 Detector	Collective term indicating AeroDR 2 1417HQ, and AeroDR 2 1417S.
AeroDR 3 Detector	Collective term indicating AeroDR 3 1417HD, AeroDR 3 1717HD, AeroDR 3 1012HQ, AeroDR 3 1417HD2, AeroDR 3 1717HD2, AeroDR 3 1417HL, and AeroDR 3 1417SL.
Image processing controller	The CS-7 or ImagePilot is referred to as the image processing controller.
Calibration	Processing for calibrating the characteristics of the DR Detector for each pixel.
PoE	An abbreviation for Power over Ethernet. Provides power using an Ethernet cable.
Aero Sync	This is a mode in which exposure is performed without being synchronized with the X-ray device.
Aero Storage	This function allows you to expose without using the image processing controller.
Aero Indicator	When the Aero Storage mode is used, this function allows you to view information in the DR Detector on a mobile terminal.
Mobile terminal	This is an external device to use for Aero Indicator.
Access Point	Collective term indicating the AeroDR Access Point and general-purpose access points. The AeroDR Access Point 2 is included.
I/F Cable	Collective term indicating the AeroDR I/F Cable, AeroDR I/F Cable2, I/F Cable3(0.67mU, 1mU, 8mD, 8mU), and I/F Cable4(1.5mD, 8mD, 8mU).
Wired cable	Collective term indicating I/F Cable and AeroDR UF Cable.
Serial exposure	An exposure method to capture multiple frame images serially taken by the pulse irradiation from an X-ray generator device.

Chapter 1

Safety Precautions & Warnings

1.1 Symbols relating to safety

1.1.1 Safety alert symbol

This is a "safety alert symbol". This symbol alerts you to matters and/or operation potentially hazardous to yourself and other people. Read these messages and follow the instructions carefully.

1.1.2 Warning notice (signal words)

Signal words indicate the degree of potential hazards in the use of the product.
Signal words include the following three types, which are used according to risk of damage caused by danger and the severity of damage.

DANGER

Indicates an imminently hazardous situation which, if not avoided, will result in death or serious injury.

WARNING

Indicates a potentially hazardous situation which, if not avoided, could result in death or serious injury.

CAUTION

Indicates a potentially hazardous situation which, if not avoided, could result in minor or moderate injury. It may also be used to indicate hazardous situation where only physical damage is likely to occur.

1.1.3 Description of graphic symbols

Graphic symbols	Explanation
	Indicates the on or standby position for the power switch of this device.
	Indicates the off position for the main power switch of this device.
	Indicates the on position for the main power switch of this device.
	Indicates the position where the ground is attached.
	Indicates a B-type Applied Parts medical device.
	Indicates that full caution is required when handling this device.
	Indicates that it is necessary to read the User's Manual before use or operation of this device.
	Indicates devices including radio frequency transmitters.
IPX6	Indicates that the level of water ingress protection is equivalent to IPX6.
IP56	Indicates that the level of water and dust ingress protection is equivalent to IP56.
CE 0197	This symbol indicates that this device is in conformity with the Regulation (EU) 2017/745.
CE	It means conformity with the Radio Equipment Directive 2014/53/EU.
MD	Indicates that this device is a medical device.

1.2 Warning labels

Various warning labels are attached to this device on the locations shown below. Do not remove these labels from this device. Warning labels are there to make sure that the user recognizes potential hazards when operating this device.

IMPORTANT

- If a warning label is too dirty or damaged to read, contact Konica Minolta technical representatives to have a new warning label attached, and redisplay by parts replacement. (a fee is required.)

1.2.1 DR Detector

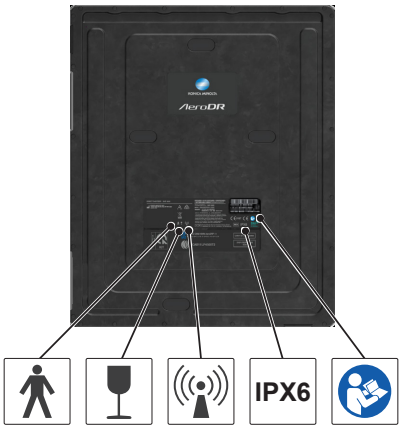

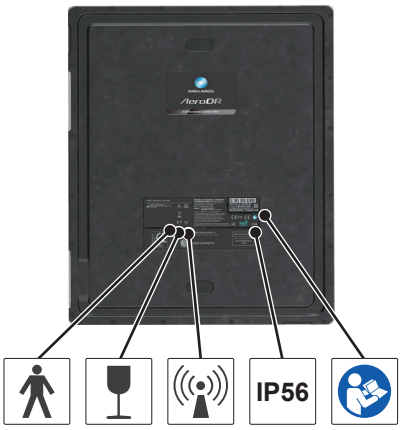

1.2.2 AeroDR Generator Interface Unit2

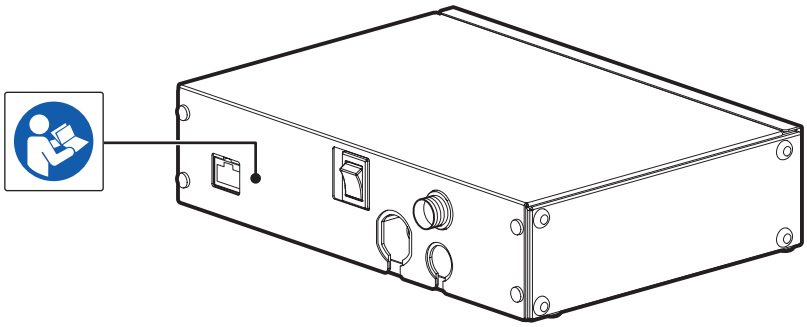

1.2.3 AeroDR Battery Charger

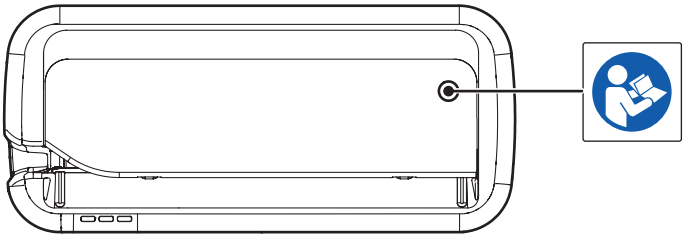

1.2.4 AeroDR Battery Charger2

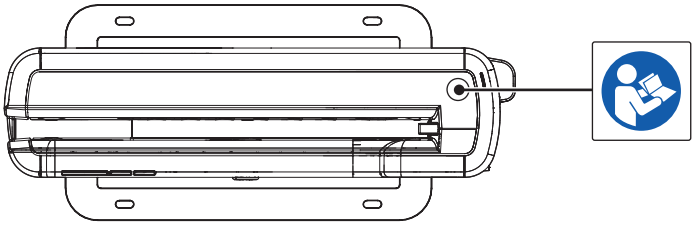

1.3 Safety precautions

Read all safety precautions thoroughly before using this device.
Be sure to observe the safety precautions described in this section.

1.3.1 Precautions before usage

CAUTION

- The operators (hospitals and clinics) hold responsibility for the usage and maintenance of this device. Do not use this device unless you are a physician or certified person under law.
- This device excluding the image processing controller is suitable for use in the patient environment. (PC used for the image processing controller is not suitable for use in the patient environment.)
- Confirm that this device is operating normally before using.
- When a problem occurs with this device, turn the power off, attach an appropriate sign, such as "malfunction", on this device, and contact Konica Minolta technical representatives.
- This device is not explosion-proof, so do not use any flammable or explosive gas near this device.
- For the basic operation of the computer, display monitor, and optional parts for this device, refer to their operation manuals.
  Please follow the rules and regulations of your relevant authorities in the disposal of this product, accessories, options, consumables, media and their packing materials.

This symbol means: Do not dispose of this product together with your household waste!

Please refer to the information of your local community or contact our dealers regarding the proper handling of end-of-life electric and electronic equipments.

Recycling of this product will help to conserve natural resources and prevent potential negative consequences for the environment and human health caused by inappropriate waste handling.

- Certain components of DR Detector may contain Perchlorate Material - Special handling may apply, See http://www.dtsc.ca.gov/hazardouswaste/perchlorate.

1.3.2 Precautions for usage

WARNING

- The DR Detector is a precision instrument. If it is dropped or hit against any object, a failure may occur due to strong impact or excessive load.
- Take note of the following when using this device:
  — Do not subject the DR Detector to strong shocks or excessive loads by dropping it, etc.

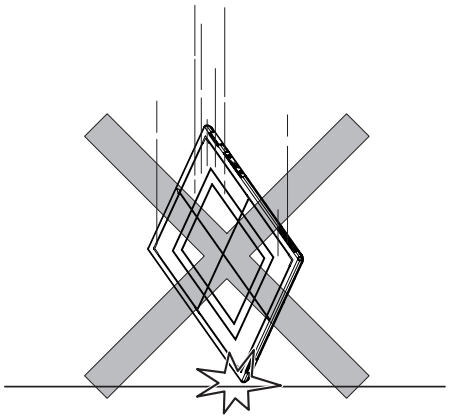

  — Do not exceed the specified overall load range when applying a load to an DR Detector.
  — Do not disassemble or modify this device.
  — Do not connect any devices that were not purchased from Konica Minolta.
  — Do not turn the power switch off or pull out the power cable, Ethernet cable while the system is operating.
  — Be careful not to drop the DR Detector on any part of a person's body by catching the wired cable on your feet.
  — Do not lean on or put pressure on the AeroDR Battery Charger installed on a wall.
- The wired cable is connected to the DR Detector using magnetic force. When moving the DR Detector, do not hold onto the wired cable, and always hold on the DR Detector. Also, do not grasp and pull the DR Detector forcefully.

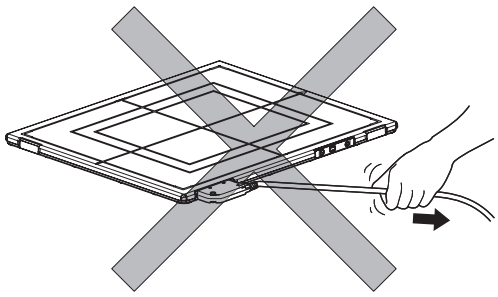

WARNING

- If there is any smoke, odor, or abnormal sound, it may cause a fire if use is continued, so immediately turn the power switch off, unplug the power plug from the wall outlet, and contact Konica Minolta technical representatives.
- Take note of the following to reduce the risk of fire, electric shock, or electrical leakage:
  - Use specified cables for the power cable, etc. and AC adapter.
  - Use a wall outlet with the correct rating as a power source.
  - Confirm that the power plug is properly connected to the wall outlet without any slack.
  - Use a grounded power source.
  - If you do not plan to use this device for an extended period of time, unplug the power plug.
  - The supplied power cable and AC adapter are dedicated for this device, so do not use it elsewhere.
  - Avoid exposure to liquid such as water.
  - Make sure that foreign material, such as pieces of metal or wire, does not get inside.
  - Do not allow any metal or conductive objects to come into contact with the spring connector of the AeroDR Battery Charger2 or wired cable.
  - Do not handle the power plug with wet hands.
  - Do not let soil or dust accumulate on the power plug, AeroDR Battery Charger2 or wired cable.
  - Do not use extension cords.
  - Do not connect many plugs to a single electrical outlet.
  - Do not damage the power cable, AC adapter or wired cable. Also, do not use damaged cables.
  - Do not block the ventilation openings.
  - Do not apply a load on the power cable.
- If there is any abnormality in appearance such as deformation of the housing or a crack, stop using the device immediately and contact Konica Minolta technical representatives.
- Images exposed using Aero Storage do not have patient information. It is recommended, therefore, to keep record so that you can associate the patient exposed with the number of saved images displayed on DR Detector.
- When the images exposed using Aero Storage are imported, the history of exposure sequence, exposure failure, and divider in the DR Detector is updated. Before importing images, check the information associated with the image information recorded on paper.
- Exposure failure or division display functions of Aero Indicator is not associated to the exposed images. Record the associated information on a piece of paper with the patient information.

CAUTION

- Take note of the following when using this device:
  - Do not use devices that emit electromagnetic waves such as high-frequency therapy equipment, mobile phones, pocket pagers, or electric blankets, close to this device.
  - Use under the specified environmental conditions. Failure to do so may result in degradation of performance or malfunction.
  - Limit the duration of continuous use of the AeroDR 1012HQ and AeroDR 3 1012HQ in a hot and humid environment (35 °C to 37 °C/95 % or lower) in an incubator to 25 minutes or less.
  - Do not insert the AeroDR 1012HQ and AeroDR 3 1012HQ into the AeroDR Battery Charger because the charger cannot be used for registration or charging the battery.
  - Note that the AeroDR Battery Charger cannot charge the AeroDR 2 1417S and AeroDR 3 Detector.

CAUTION

- Take the following notes when using the DR Detector:
  - Use the DR Detector on a flat base. If the DR Detector is placed on a sloping surface and subjected to a load, its internal sensor may be damaged.

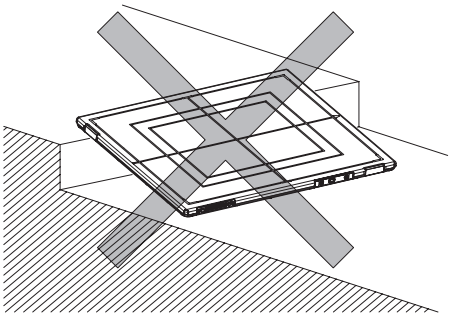

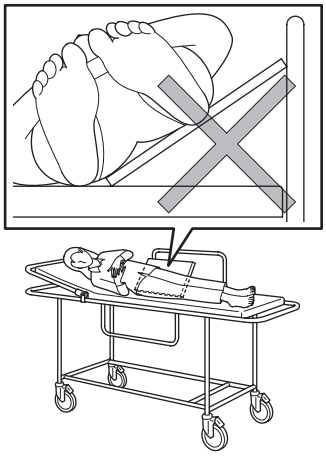

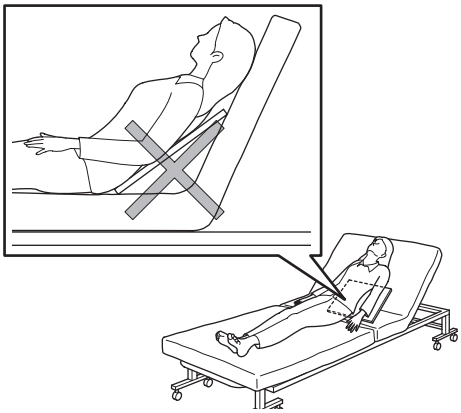

  - When laying the patient onto the DR Detector during positioning, do so very slowly.
  - When placing the DR Detector under the patient as part of the exposure process, insert and pull out the detector slowly.
  - Use the recommended adapter when you need to perform exposure on a stretcher or a place where load is to be applied locally.
  - Exposing or immersing the DR Detector to patient body fluids, chemicals, water, etc. may allow such liquids to enter through exterior gaps and cause a failure. Make sure to cover the DR Detector with a vinyl sheet, etc.
  - Be careful of the ingress of patient body fluids, chemicals, water, etc., because the AeroDR Detector is not designed to be waterproof.
  - The AeroDR 2 Detector and AeroDR 3 Detector are designed to have waterproof capabilities, but be careful when handling them because they are not guaranteed to be completely waterproof. Also, be careful because subjecting them to strong impacts or excessive loads by dropping or hitting them against other objects may diminish their waterproof capabilities.

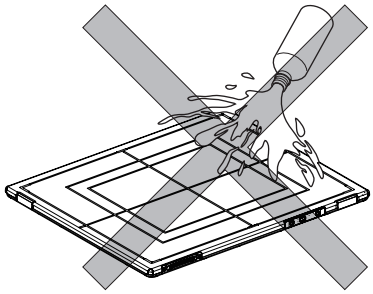

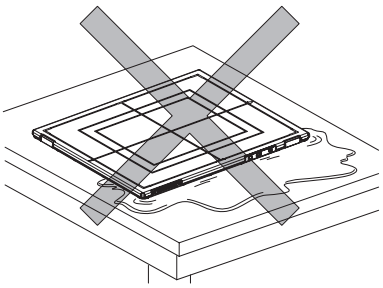

  - Never leave DR Detectors in hot and humid environments for long periods of time.
  - The DR Detector has wireless antennae positioned at 2 places. Do not block them with the body or metal because that will interfere with, disconnect or slow down wireless communication.
  - Pressing the power switch on the AeroDR Detector and AeroDR 2 Detector causes each LED (green, orange, blue) to light temporarily or flash. After this, only green begins to flash in a slow cycle. Please check the lighting or flashing of each color once.
  - Pressing the Power SW of the AeroDR 3 Detector causes the Information LED (white) to flash or light. After this, the Battery LED (blue) lights. Please check the flashing or lighting of each color.

⚠ CAUTION

— The battery capacity is designed to allow the life period calculated based on the standard usage of the DR Detector, but replace with a new battery as necessary.
— Check that the buzzer sounds when inserted in the AeroDR Battery Charger or AeroDR Battery Charger2.
— Check that the LED indicates the fully charged state when inserted in the AeroDR Battery Charger.
— Check that the LED indicates recharging status when inserted in the AeroDR Battery Charger2.
— Be careful not to get your hand caught when inserting the DR Detector into the AeroDR Battery Charger or AeroDR Battery Charger2.
— If the DR Detector is inserted into the AeroDR Battery Charger or AeroDR Battery Charger2, make sure that the AeroDR Battery Charger or AeroDR Battery Charger2 will not tip over due to any shock applied to the DR Detector.

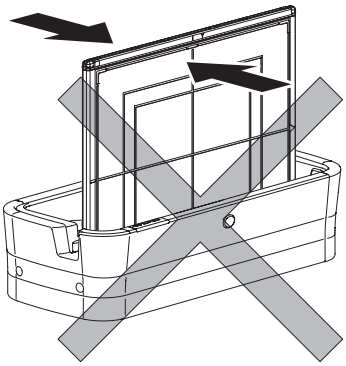

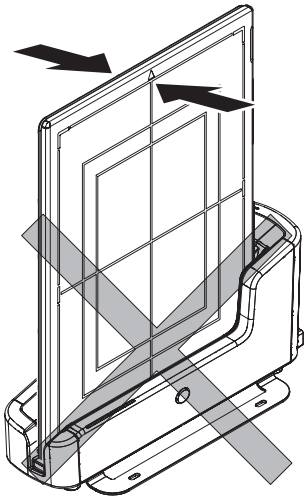

— The DR Detector is precision equipment, and therefore impact or vibration during radiography or image transfer may affect the image quality. Be careful when handling the DR Detector during and just after radiography.
— When using the remote table for exposure, take caution to prevent shocks and vibrations during exposure and/or image transmission, because affect from shocks and vibrations may be large.
— Never leave DR Detectors around heat generators such as electric carpet.
— Do not damage or deform the DR Detector; doing so may have an effect on exposed images, or lead to injury.
— Do not use a sharp object to operate the switch; doing so may damage the AeroDR 2 Detector and AeroDR 3 Detector.
— When using a tool to affix the AeroDR Grip sheet or perform replacement, be careful not to get injured by a tip or edge of the tool.

• When using the wired cable, observe the following:
— Remove the cable by holding the connector housing.
— Do not let the cable get pinched by doors and do not place heavy objects on it.
— Do not bend or pull the cable excessively.
— Make sure that the cable is properly connected to the DR Detector without wobbling.
— Do not connect the connector housing backwards.

• Do not sit on or put your feet on the AeroDR Battery Charger or AeroDR Battery Charger2.

• Take note of the following if the DR Detector is damaged and fluorescent medium or lead is exposed:
— Immediately stop using the device, and contact Konica Minolta technical representatives.
— If the fluorescent medium gets in your eyes, do not rub and instead wash with running water immediately.
— If you have swallowed any of the fluorescent medium or if the fluorescent medium has gotten into your eyes, administer first-aid treatment immediately, and consult a doctor.
— If the medium comes into contact with your skin directly, wash the affected area thoroughly with water.
— Use and store in a location inaccessible to children.

• When the DR Detector is used for exposure, pay attention to the following items.
— Start exposure after confirming on the display of the image processing controller that the machine is ready for exposure.
— Perform exposure under the X-ray imaging conditions that has been confirmed by us.
— Use the specified grid to perform exposure.
— Apply the specified operation methods to use the grid.
— Do not let the DR Detector vibrate or receive shock until the preview image is displayed.
— If the irradiation field is larger than DR Detector when you take an image, an artifact may occur due to the X-ray backscatter effect. Adjust the irradiation filed to fit within the imaging range.

CAUTION

- Precautions when performing exposure in Aero Sync mode.
  - Confirm that the image processing controller is ready for exposure through its display before performing exposure.
  - Confirm that a confirmation is sounded from the image processing controller after the start of exposure.
  - Do not let the DR Detector vibrate or receive shock until the preview image is displayed.
  - Confirm that the DR Detector's battery level is full before performing exposure.
  - Use the system under the exposure condition confirmed prior to exposure.
- Please pay attention on the followings when using Aero Storage and Aero Indicator:
  - Ensure that the DR Detector LED display or Aero Indicator display indicates that it is ready for exposure, before performing an exposure operation.
  - If Aero Indicator experiences a connection failure, check the DR Detector LED display before performing an exposure operation.
  - After an exposure operation, do not give impact or vibration to the DR Detector until the DR Detector LED display or Aero Indicator display indicates that the device is ready for exposure. In addition, if the display cannot be verified, do not give shocks and/or vibrations to the DR Detector for six (6) seconds after an exposure operation.
  - Ensure that the battery level of the DR Detector is 10 % or more before performing an exposure operation.
  - Note that the exposed image is not displayed in Aero Indicator when the connection to the DR Detector is disconnected.
  - When exposing images using Aero Indicator, check the number of saved images on the DR Detector information LED display, or ensure that the exposed image is displayed in Aero Indicator.
  - Do not give medical diagnoses using the images displayed in Aero Indicator.
- If there are any radioactive substances remaining in the patient's body after nuclear medicine testing or some other reason, the AeroDR 2 Detector and AeroDR 3 Detector may recognize that X-rays were emitted and start image transfer. When the image is transferred, change the X-ray sensitive setting of the image processing controller to "Large" before performing exposure.
- If you change the X-ray sensitivity to "Large" in the AeroDR 2 Detector, make sure that all of the following conditions are met before performing exposure. If you perform exposure under other conditions, you may not be able to get an image.
  - On the DR Detector, set up an area (2 cm x 2 cm or larger) on which the X-rays are emitted directly.
  - Emit the X-rays onto the entire DR Detector.
  - Emit the X-rays by using a tube current of 140 mA or higher or a tube voltage of 90 kV or higher.
- If you change the X-ray sensitivity to "Large" or "Med" in the AeroDR 3 Detector, make sure that all of the following conditions are met before performing exposure. If you perform exposure under other conditions, you may not be able to get an image.
  - Emit the X-rays onto the entire DR Detector.
  - Emit the X-rays by using a tube current of 140 mA or higher or a tube voltage of 90 kV or higher.
- Set the maximum exposure time at the suitable exposure time with the image processing controller when performing exposure.
- When setting the maximum exposure time to 4.0, 6.7, 10.3, be sure to contact Konica Minolta technical representatives.
- When the maximum exposure time of the AeroDR 3 Detector is set at 10.3, the interval between exposures should be 2 minutes or longer. The following exposures also require 2 minutes intervals.
- If you use Ethernet cables, please pay attention to the following.
  - If the power of this device is on, do not connect nor remove the Ethernet cables.
  - Install the cables so that you do not catch them on your feet and so on.
  - Do not apply a load.
  - Use shielded Ethernet cables. However, for connections between AeroDR Interface Unit and AeroDR Battery Charger or AeroDR Battery Charger2 and between AeroDR Interface Unit and access points, you can use unshielded Ethernet cables.
  - Communication speed is low or communication is down, it is necessary to check the Ethernet cable replacement. Contact Konica Minolta technical representatives.

1.3.3 Precautions regarding electromagnetic waves

EMC Statement

This device has been tested and found to comply with the limits for medical devices in IEC 60601-1-2: 2007 or IEC 60601-1-2: 2014.
These limits are designed to provide reasonable protection against harmful interference in a typical medical installation. The device generates, uses and can radiate radio frequency energy and, if not installed and used in accordance with the instructions, may cause harmful interference to other devices in its vicinity. However, there is no guarantee that interference will not occur in a particular installation.
Whether this device does cause harmful interference to other devices can be determined by turning this device off and on. If it causes harmful interference, the user is encouraged to try to correct the interference by 1 or more of the following measures:

- Reorient or relocate the receiving device.
- Increase the separation between the devices.
- Connect this device into a wall outlet on a circuit different from that to which the other devices are connected.
- Contact Konica Minolta technical representatives.

WARNING

- Do not use mobile RF communication devices such as mobile phones or pocket pagers in the vicinity of this device. Use of such RF devices near this device can cause errors in operation due to electromagnetic wave interference. When using a mobile RF device, ensure that the distance between the RF device in use and this device is at least 30 cm (12 inches).
- The use of accessories, transducers and cables other than those sold by Konica Minolta, Inc. as internal components, may result in increased emissions or decreased electromagnetic immunity of this device, possibly causing malfunction.
- Do not use this device adjacent to or stacked with other devices. If adjacent or stacked use is necessary, confirm normal operation in the configuration in which this device will be used.

Supplementary information regarding IEC 60601-1-2:2007 and IEC 60601-1-2:2014

(1) Take precautions against this device especially regarding EMC. Install and put into service according to the electromagnetic compatibility (EMC) information provided in the manual (Table 1 - Table 5).

(2) This device is suitable for use in medical institutions such as hospitals and clinics. However, this device is not suitable for use in environments with high degree of electromagnetic wave interference (such as near an electric operation device in use for output, or near a high frequency treatment device).

(3) Cable list
- Power cable (3.048 m/3-Wire/No Shielding)
- Ethernet cable (max 30 m/Shielding)
- Non-shielded Ethernet cable can be used for connecting to the AeroDR Battery Charger and the AeroDR Battery Charger2

(4) Specifications regarding RF transmitters frequency:
- Frequency
  - — AeroDR SYSTEM:
    5150 MHz to 5350 MHz, 5470 MHz to 5850 MHz
  - — AeroDR SYSTEM 2:
    2412 MHz to 2472 MHz
    5180 MHz to 5320 MHz, 5500 MHz to 5825 MHz
  - — SKR 3000:
    2412 MHz to 2472 MHz
    5180 MHz to 5320 MHz, 5500 MHz to 5825 MHz
- Modulation
  - — AeroDR SYSTEM:
    OFDM
  - — AeroDR SYSTEM 2:
    2412 MHz to 2472 MHz: DSSS/CCK/OFDM
    5180 MHz to 5320 MHz, 5500 MHz to 5825 MHz:OFDM
  - — SKR 3000:
    2412 MHz to 2472 MHz: DSSS/CCK/OFDM
    5180 MHz to 5320 MHz, 5500 MHz to 5825 MHz:OFDM
- Maximum effective radiation power
  - — AeroDR SYSTEM:
    +15 dBm
  - — AeroDR SYSTEM 2:
    +10 dBm
  - — SKR 3000:
    +15 dBm
- This device may be interfered with by other devices that conform to CISPR emission requirements.

Table 1 (support for IEC 60601-1-2:2007 and IEC 60601-1-2:2014)

Guidelines and manufacture's declaration - electromagnetic emissions		
This device is intended for use in the electromagnetic environment specified below. The customer or the user of this device should assure that it is used in such an environment.		
Emissions test	**Compliance**	**Electromagnetic environment - guidelines**
RF emissions CISPR 11	Group 1	The device uses RF energy only for its internal function. Therefore, its RF emissions are very low and are not likely to cause any interference in nearby electronic equipment.
RF emissions CISPR 11	Class B	This device is suitable for use in all establishments including the following: Domestic establishments and those directly connected to the public low-voltage power supply network that supplies buildings for domestic purposes.
Harmonic emissions IEC 61000-3-2	Class A	
Voltage fluctuations/flicker emissions IEC 61000-3-3	Complies	

IMPORTANT

- If I/F Cable4 1.5mD, I/F Cable4 8mD, and/or I/F Cable4 8mU is used, the emissions characteristics of this device is CISPR 11 class A that is suitable for the industrial areas and the hospitals. If it is used in a residential environment, for which CISPR 11 class B is normally required, this equipment might not offer adequate protection to radio-frequency communication services, and it may be necessary to take a mitigation measures, for example, by relocating or re-orientating the device.

Table 2 (support for IEC 60601-1-2:2007)

Guidelines and manufacturer's declaration - electromagnetic immunity			
This device is intended for use in the electromagnetic environment specified below. The customer or the user of this device should assure that it is used in such an environment.			
Immunity test	**IEC 60601 test level**	**Compliance level**	**Electromagnetic environment - guidelines**
Electrostatic discharge (ESD) IEC 61000-4-2	±6 kV contact	±6 kV contact	Floors should be wood, concrete or ceramic tile. If floors are covered with synthetic material, the relative humidity should be at least 30 %. Mains power quality should be that of a typical commercial or hospital environment.
	±8 kV air	±8 kV air	
Electrical fast transient/burst IEC 61000-4-4	±2 kV for power supply lines	±2 kV for power supply lines	Mains power quality should be that of a typical commercial or hospital environment.
	±1 kV for input/output lines	±1 kV for input/output lines	
Surge IEC 61000-4-5	±1 kV line(s) to line(s)	±1 kV line(s) to line(s)	
	±2 kV line(s) to earth	±2 kV line(s) to earth	
Voltage dips, short interruptions and voltage variations on power supply input lines IEC 61000-4-11	<5 % U_T (>95 % dip in U_T) for 0.5 cycle	<5 % U_T (>95 % dip in U_T) for 0.5 cycle	Mains power quality should be that of a typical commercial or hospital environment. If the user of the device requires continued operation during power mains interruptions, it is recommended that the device be powered from an uninterrupted power supply or a battery.
	40 % U_T (60 % dip in U_T) for 5 cycles	40 % U_T (60 % dip in U_T) for 5 cycles	
	70 % U_T (30 % dip in U_T) for 25 cycles	70 % U_T (30 % dip in U_T) for 25 cycles	
	<5 % U_T (<95 % dip in U_T) for 5 sec	<5 % U_T (<95 % dip in U_T) for 5 sec	
Power frequency (50/60 Hz) magnetic field IEC 61000-4-8	3 A/m	3 A/m	Power frequency magnetic fields should be at levels characteristic of a typical location in a typical commercial or hospital environment.
[NOTE] U_T is the AC mains voltage prior to application of the test level.			

Table 3 (support for IEC 60601-1-2:2007)

Guidelines and manufacturer's declaration - electromagnetic immunity			
This device is intended for use in the electromagnetic environment specified below. The customer or the user of this device should assure that it is used in such an environment.			
Immunity test	**IEC 60601 test level**	**Compliance level**	**Electromagnetic environment - guidelines**
			Portable and mobile RF communications equipment should be used no closer to any part of this device, including cables, than the recommended separation distance calculated from the equation applicable to the frequency of the transmitter. Recommended separation distance
Conducted RF IEC 61000-4-6	3 Vrms 150 kHz to 80 MHz	[3] V	d=[1.2] √P
Radiated RF IEC 61000-4-3	3 V/m 80 MHz to 2.5 GHz	[3] V/m	d=[1.2] √P 80 MHz to 800 MHz d=[2.3] √P 800 MHz to 2.5 GHz where P is the maximum output power rating of the transmitter in watts (W) according to the transmitter manufacturer and d is the recommended separation distance in meters (m). Field strengths from fixed RF transmitters, as determined by an electromagnetic site survey[a], should be less than the compliance level in each frequency range[b]. Interference may occur in the vicinity of equipment marked with the following symbol:
[NOTE] At 80 MHz and 800 MHz, the separation distance for the higher frequency range applies. [NOTE] These guidelines may not apply in all situations. Electromagnetic propagation is affected by absorption and reflection from structures, objects and people.			
a Field strengths from fixed transmitters, such as base stations for radio (cellular/cordless) telephones and land mobile radios, amateur radio, AM and FM radio broadcast and TV broadcast cannot be predicted theoretically with accuracy. To assess the electromagnetic environment due to fixed RF transmitters, an electromagnetic site survey should be considered. If the measured field strength in the location in which this device is used exceeds the applicable RF compliance level above, this device should be observed to verify normal operation. If abnormal performance is observed, additional measures may be necessary, such as reorienting or relocating this device. b Over the frequency range 150 kHz to 80 MHz, field strength should be less than [3] V/m.			

Table 4 (support for IEC 60601-1-2:2007)

Recommended separation distance between portable and mobile RF communications equipment and the device			
This device is intended for use in an electromagnetic environment in which radiated RF disturbances are controlled. The customer or the user of this device can help prevent electromagnetic interference by maintaining a minimum distance between portable and mobile RF communications equipment (transmitters) and this device as recommended below, according to the maximum output power of the communications equipment.			
Rated maximum output power of the transmitter W	**Separation distance according to frequency of transmitter m**		
	150 kHz to 80 MHz d=[1.2] √P	**80 MHz to 800 MHz d=[1.2] √P**	**800 MHz to 2.5 GHz d=[2.3] √P**
0.01	0.12	0.12	0.23
0.1	0.38	0.38	0.73
1	1.2	1.2	2.3
10	3.8	3.8	7.3
100	12	12	23
For transmitters rated at a maximum output power not listed above, the recommended separation distance d in meters (m) can be estimated using the equation applicable to the frequency of the transmitter, where P is the maximum output power rating of the transmitter in watts (W) according to the transmitter manufacturer. [NOTE] At 80 MHz and 800 MHz, the separation distance for the higher frequency range applies. [NOTE] These guidelines may not apply in all situations. Electromagnetic propagation is affected by absorption and reflection from structures, objects and people.			

Table 5 (support for IEC 60601-1-2:2014)

Phenomenon	Basic EMC standard or test method	Immunity test levels
Electrostatic discharge	IEC 61000-4-2	±8 kV contact ±2 kV, ±4 kV, ±8 kV, ±15 kV air
Radiated RF EM fields	IEC 61000-4-3	3 V/m 80 MHz - 2.7 GHz, 5.1 GHz - 5.8 GHz 80 % AM at 1 kHz
Proximity fields from RF wireless communications equipment	IEC 61000-4-3	See the following table “Test specifications for Enclosure port immunity to RF wireless communications equipment”
Electrical fast transients / bursts	IEC 61000-4-4	±2 kV input a.c. power port ±1 kV signal input/output parts port 100 kHz repetition frequency
Surges	IEC 61000-4-5	±0.5 kV, ±1 kV line-to-line ±0.5 kV, ±1 kV, ±2 kV line-to-ground
Conducted diturbances induced by RF fields	IEC 61000-4-6	3 V 0.15 MHz - 80 MHz 6 V in ISM bands between 0.15 MHz and 80 MHz [a] 80 % AM at 1 kHz
Rated power frequency magnetic fields	IEC 61000-4-8	30 A/m
Voltage dips	IEC 61000-4-11	0 % U_T; 0.5 cycle At 0°, 45°, 90°, 135°, 180°, 225°, 270° and 315°
		0 % U_T; 1 cycle and 70 % U_T; 25/30 cycle [b] Single phase: at 0°
Voltage interruptions	IEC 61000-4-11	0 % U_T; 250/300 cycle [b]
[NOTE] U_T is the a.c. mains voltage prior to application of the test level.		
a The ISM (industrial, scientific and medical) bands between 0.15 MHz and 80 MHz are 6.765 MHz to 6.795 MHz; 13.553 MHz to 13.567 MHz; 26.957 MHz to 27.283 MHz; and 40.66 MHz to 40.70 MHz. b E.g. 10/12 means 10 periods at 50 Hz or 12 periods at 60 Hz.		

Test specifications for Enclosure port immunity to RF wireless communications equipment

Test frequency (MHz)	Modulation	Immunity test level (V/m)
385	Pulse modulation 18 Hz	27
450	Frequency modulation ±5 kHz deviation 1 kHz sine	28
710	Pulse modulation 217 Hz	9
745		
780		
810	Pulse modulation 18 Hz	28
870		
930		
1720	Pulse modulation 217 Hz	28
1845		
1970		
2450	Pulse modulation 217 Hz	28
5240	Pulse modulation 217 Hz	9
5500		
5785		

1.3.4 Precautions regarding wireless communication

CAUTION

- This device is equipped with a communication function that operates via wireless LAN. Conformance is required with the relevant regulations defined by the countries in which this device is to be used.
- Inappropriate usage may cause interference in radio communication. Also, if this device is modified, approval and warranty according to the radio law of the applicable government will be voided.
- It may affect aeronautical systems, so do not use onboard airplanes.
- This device may be affected by other wireless devices. Make sure that the environment is free of wireless communications.
- DR Detector has been confirmed to comply with the relevant regulations of the following countries:

United States & Canada

Federal Communications Commission Statement / Canadian Department of Communications

- DR Detector complies with Part 15 of FCC Rules and ISED regulations exempt RSS standard(s). Operation is subject to the following 2 conditions: (1) this device may not cause interference, and (2) this device must accept any interference, including interference that may cause undesired operation of this device.
- This transmitter must not be co-located or operated in conjunction with any other antenna or transmitter.
- The 5.15 GHz-5.35 GHz band is restricted to indoor operation only.
- The available scientific evidence does not show that any health problems are associated with using low power wireless devices. There is no proof, however, that these low power wireless devices are absolutely safe. Low power Wireless devices emit low levels of radio frequency energy (RF) in the micro-wave range while being used. Whereas high levels of RF can produce health effects (by heating tissue), exposure of low-level RF that does not produce heating effects causes no known adverse health effects. Many studies of low-level RF exposures have not found any biological effects. Some studies have suggested that some biological effects might occur, but such findings have not been confirmed by additional research. DR Detector has been tested and found to comply with FCC/IC radiation exposure limits set forth for controlled equipment and meets the FCC radio frequency (RF) Exposure Guidelines and RSS-102 of the IC radio frequency (RF) Exposure rules.
- High-power radars are allocated as primary users (i.e. priority users) of the 5250 MHz-5350 MHz and 5650 MHz-5850 MHz bands, and these radars could cause interference and/or damage to LE-LAN devices.
- Compliance with FCC requirement 15.407(c): Data transmission is always initiated by software, which is passed down through the MAC, through the digital and analog baseband, and finally to the RF chip. Several special packets are initiated by the MAC. These are the only ways the digital baseband portion will turn on the RF transmitter, which it then turns off at the end of the packet. Therefore, the transmitter will be on only while one of the aforementioned packets is being transmitted. In other words, this device automatically discontinues transmission in case of either absence of information to transmit or operational failure.
- Compliance with FCC requirement 15.407(g): Frequency Tolerance: 20 ppm

FCC WARNING

Changes or modifications not expressly approved by the party responsible for compliance could void the user's authority to operate the equipment.

European Union

European Union Directives Conformance Statement

DR Detector conforms with the Declaration of Conformity (DoC) to Radio Equipment Directive 2014/53/EU or R&TTE Directive 1999/5/EC. This device purposely connects to an access point of a 5 GHz network.

The 5.15-5.35 GHz band is restricted to indoor operation only.

Hereby, Konica Minolta, Inc., declares that the AeroDR SYSTEM, AeroDR SYSTEM 2 and SKR3000 are in compliance with Directive 2014/53/EU or 1999/5/EC. The full text of the EU declaration of conformity is available at the following internet address:

https://www.konicaminolta.eu/

Taiwan

Observe the following based on the regulations stated in Article 10 of Administration Measures for Low-power Radiation Electric Machines.

Article 12
As for type-approval qualified low-power radio-frequency generator, no company, firm, or user may arbitrarily change the frequency, increase the power or alter the function or characteristics of the original design without prior permission.

Article 14
The use of low-power radio-frequency electric machines shall not affect air flight safety or disturb lawful communication. If disturbance is found, the use of such electric machines shall be suspended immediately and such use shall not be resumed until the disturbance is eliminated.
Lawful communication mentioned in the preceding paragraph refers to wireless communication operation in accordance with the provisions of the Telecommunication Law.
Low-power radio-frequency electric machines shall tolerate disturbance from lawful communication or from radio-wave radiation electric machine for industrial, scientific or medical use.

China

1. Clearly indicate the technical indicators and the scope of usage in the accompanying document, and explain the usage of all controls, adjustments, and switches, etc.
   - Operating frequency range: 5725 MHz-5850 MHz
   - Transmit power: ≤500 mW and ≤27 dBm
   - Equivalent isotropic radiated power (EIRP): ≤2 W and ≤33 dBm
   - Maximum radiation power density: ≤13 dBm/MHz and ≤19 dBm/MHz (EIRP)
   - Frequency Tolerance limit: 20 ppm
   - Transmit power at the band edge (EIRP): ≤80 dBm/Hz (≤5725 MHz or ≥5850 MHz)
   - Spurious emissions:
     ≤-36 dBm/100 kHz (30 MHz-1000 MHz)
     ≤-40 dBm/1 MHz (2400 MHz-2483.5 MHz)
     ≤-40 dBm/1 MHz (3400 MHz-3530 MHz)
     ≤-33 dBm/100 kHz (5725 MHz-5850 MHz)
     (Note: Other than ±2.5-times supported channel bandwidth)
     ≤-30 dBm/1 MHz (Other 1 GHz-40 GHz)
2. Do not arbitrarily change frequency or increase transmit power (including the added radio frequency amplifier). In addition, do not mount an antenna without permission, or change to another transmission antenna.
3. When in use, do not cause harmful interference in other legal wireless communication services. If you find interference to be occurring, discontinue use immediately. After taking measures to eliminate interference, you may continue using the device.
4. If you use low power radio equipment, you must accept interference from various wireless services or radiation interference from industrial, scientific and medical application equipment.
5. Do not use near a plane or an airport.

South Korea

Because this wireless equipment may be affected by radio interference, it cannot provide services related with life safety.

Thailand

DR Detector conforms to NTC technical requirement.

Brazil

This equipment operates secondarily, that is, it doesn't benefit from protection against harmful interference, even from stations of the same type, and cannot cause interference to systems that operate primarily.
DR Detector has been approved by ANATEL in compliance with the procedures regulated by Resolution 242/2000 and complies with the applicable technical requirements.

AeroDR system and Stitching system fulfill the requirements set forth in INMETRO Ordinance No 350, dated 06/09/2010, and other regulations pertaining to compulsory certification of Electrical Equipment Subject to Sanitary Surveillance by ANVISA (RDC No 27, dated 21/06/2011, and Normative Instruction No 11, dated 16/12/2014).
When used appropriately on the body, the highest SAR value reported during product certification is 0.051 W/kg (for the P-61 model), 0.054 (for the P-71 model) and 0.074 (for the P-81 model).
Konica Minolta hereby declares that the AeroDR System and Stitching System products fulfill the biocompatibility aspects of ISO 10993-1:2009.

This equipment operates with a voltage of AC 127V.

This equipment is not entitled to harmful interference protection and may not cause interference to duly authorized systems.

For more information, please visit:
http://www.anatel.gov.br

Mexico

This equipment operates on a secondary basis; consequently, you must accept harmful interferences from equipment of the same type, and cannot cause interferences to systems operating on a primary basis.

1.3.5 Precautions for installing, moving, and storing

WARNING

- Take note of the following when moving this device not including the DR Detector:
  - Do not subject to shocks or vibration .
  - Do not start moving until the power is turned off, and operation has stopped completely.
  - Do not move with the power cable or any other cable connected.
  - Do not install the power cable, Ethernet cable and wired cable so that you do not catch them on your feet and so on.
  - Be careful not to drop the DR Detector on any part of a person's body.
  - Install on a horizontal and stable surface.
- When installing the AeroDR Battery Charger or AeroDR Battery Charger2 on a table top, observe the following:
  - Install on a base that can withstand maximum patient weight because load is inserted when setting the DR Detector.
  - The contact area for the AeroDR Battery Charger or AeroDR Battery Charger2 must be larger than the area of the AeroDR Battery Charger or AeroDR Battery Charger2 so that it will not fall down when the DR Detector is inserted or when people touch it by accident.
  - Do not use a base that has a surface made of slippery material such as teflon.
  - Connect power cable and wires so that no one will trip.
  - Install in a place easy to insert the DR Detector.
  - Install so that the vent on the back side of the AeroDR Battery Charger is not blocked.

CAUTION

- Because connections of the X-ray device can only be made by Konica Minolta or its designated contractors, contact Konica Minolta or its designated contractors.
- For the X-ray devices enabled to connect, contact Konica Minolta technical representatives.
- Contact Konica Minolta or dealers specified by Konica Minolta to install or move this device.
- Since it is required to meet the specification provided by the X-ray device manufacturer to connect with an X-ray device, contact Konica Minolta or dealers specified by Konica Minolta.
- Take note of the following when installing or storing this device.
  - Install or store this device within the specified storage and usage conditions and environment.
  - Do not install or store in a location where it may be adversely affected by atmospheric pressure, temperature, humidity, ventilation, sunlight, dust, salt-air, or air containing sulfur.
  - Do not install or store in a location where it is not stable, ventilation is insufficient, the difference in light-dark is great, electromagnetic waves are generated, or where subject to vibration or shock.
  - Do not install or store in a location where chemical agents are used or stored.
  - Do not install this device facing up or upside down.
  - Do not install the AeroDR Interface Unit, AeroDR Interface Unit2 and AeroDR Generator Interface Unit stacked on each other.
- Connect the AeroDR Interface Unit2, AeroDR Generator Interface Unit, AeroDR Generator Interface Unit2 and Generator Interface Unit 3 to an X-ray device that conforms to IEC 60601 or to an equivalent standard.
- Contact Konica Minolta or dealers specified by Konica Minolta with regard to the information of compatible X-ray devices.

1.3.6 Precautions regarding maintenance

WARNING

- Perform the maintenance and inspection periodically. In addition to the user periodical maintenance that needs to be performed, periodical maintenance by a service engineer is also required.
- If there are stains such as body fluids, clean and disinfect.

CAUTION

- Based on the warranty, parts that are no longer under warranty (1 year) can be replaced for a fee.
- Turn off the power and disconnect the power plug from the wall outlet before cleaning or maintaining this device.
- Securely connect the power cable, wired cable and Ethernet cable after cleaning and maintenance.
- Clean the dirt from the gaps between the exterior of DR Detector, and the terminal using a commercial plastic brush. Do not clean with sharp or hard objects.
- DR Detector needs disinfection.
- The exteriors of AeroDR 3 1417HD2, AeroDR 3 1717HD2, AeroDR 3 1417HL, and AeroDR 3 1417SL contain antibacterial agents, they also need to be disinfected the same as any other DR Detectors.
- Take care regarding the following when disinfecting the DR Detector.
  - Use ethanol for disinfection, isopropanol for disinfection, or commercial chlorine bleach, or 1 % hypochlorite (5-fold dilution of household bleach) when disinfecting. However, bleach and hypochlorite are corrosive, so wash the bleach off well to avoid corrosion.
  - Please note that if you use chemical for disinfection other than the above, it may affect the quality, performance, and safety of the DR Detector.
  - If you directly apply or spray disinfecting solution on the DR Detector, the solution will enter the instrument through exterior gaps, causing a failure. Dampen a lint-free, soft cloth with disinfecting solution, and use after wringing it thoroughly. Do not apply disinfecting solution onto the wired connection connector and LED when cleaning.

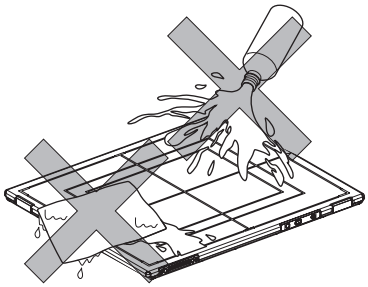

  - Disinfecting solution is a chemical agent, so follow the precautions of the manufacturer.
- Fully charge battery once a month even if the DR Detector has not been used for a long time.

1.3.7 Precautions on service life

CAUTION

Service life

Name	Service life
DR Detector	6 years
AeroDR Interface Unit	6 years
AeroDR Interface Unit2	6 years
Detector Interface Unit	6 years
Detector Interface Unit 2	6 years
Power Supply Unit	6 years
AeroDR Generator Interface Unit	6 years
AeroDR Generator Interface Unit2	6 years
Generator Interface Unit 3	6 years
AeroDR Battery Charger	6 years
AeroDR Battery Charger2	6 years
AeroDR Access Point	6 years
I/F Cable	6 years
AeroDR UF Cable	6 years

- The above service life is valid only if the product has been properly operated while following the precautions for use and performing the specified maintenance. (By self certification <our data>)
- The service life may differ depending on usage conditions and environment.
- Some component parts of this device are commercially available parts that have a short cycle of model changes, therefore, it might not be possible to supply service parts even within the service life. In addition, related component parts may need to be replaced to maintain compatibility at the time of model change.

Chapter 2

Product Overview

2.1 Overview of this device

2.1.1 Functions

The AeroDR SYSTEM consists of AeroDR Detector, AeroDR Interface Unit, AeroDR Interface Unit2, AeroDR Generator Interface Unit, AeroDR Battery Charger, AeroDR Battery Charger2, AeroDR Access Point, etc. With the DR Detector, diagnostic X-ray digital image data is generated by the irradiation signal and exposure from an X-ray device, and sent to the image processing controller.
Furthermore, the DR Detector can be connected with (or inserted in) the AeroDR Interface Unit, AeroDR Interface Unit2, AeroDR Battery Charger and AeroDR Battery Charger2 or removed from them.

The AeroDR SYSTEM 2 consists of the AeroDR 2 Detector, AeroDR Interface Unit, AeroDR Interface Unit2, AeroDR Generator Interface Unit, AeroDR Generator Interface Unit2, AeroDR Battery Charger, AeroDR Battery Charger2, etc. With the DR Detector, diagnostic X-ray digital image data is generated by the irradiation signal or exposure from an X-ray device and sent to the image processing controller.
Furthermore, the DR Detector can be connected with (or inserted in) or removed from the AeroDR Interface Unit, AeroDR Interface Unit2, AeroDR Battery Charger and AeroDR Battery Charger2.

The SKR 3000 consists of the AeroDR 3 Detector, AeroDR Interface Unit, AeroDR Interface Unit2, Detector Interface Unit, Detector Interface Unit 2, Power Supply Unit, AeroDR Generator Interface Unit, AeroDR Generator Interface Unit2, Generator Interface Unit 3, AeroDR Battery Charger2, etc. The DR Detector uses the exposure signal or exposure from the X-ray device to generate X-ray digital image data for diagnosis, including serial exposure images, and send to the image processing controller.
Furthermore, the DR Detector can be connected with (or inserted in) or removed from the AeroDR Interface Unit, AeroDR Interface Unit2, Detector Interface Unit, Detector Interface Unit 2 and AeroDR Battery Charger2.

HINT

- The AeroDR SYSTEM, AeroDR SYSTEM 2 and SKR 3000 can be used together.

2.1.2 System configuration and connection examples

Basic configuration example

Number	Name	Functions
(1)	DR Detector	• There are 13 types of DR Detectors: AeroDR 1417HQ, AeroDR 1417S, AeroDR 1717HQ, AeroDR 1012HQ, AeroDR 2 1417HQ, AeroDR 2 1417S, AeroDR 3 1417HD, AeroDR 3 1717HD, AeroDR 3 1012HQ, AeroDR 3 1417HD2, AeroDR 3 1717HD2, AeroDR 3 1417HL, and AeroDR 3 1417SL. • DR Detector is of B-type Applied Parts.
(2)	AeroDR Interface Unit	• Supplies power to the AeroDR Generator Interface Unit, AeroDR Generator Interface Unit2, and access point. • Supplies power to and charges the DR Detector when the wired cable is used. • It has a built-in hub function. • 2 DR Detectors can be connected via wired connection. • The expansion AeroDR Interface Unit is required for connecting the third to seventh DR Detectors via wired connection.
(3)	AeroDR Interface Unit2	• Supplies power to the access point. • Supplies power to and charges the DR Detector when the wired cable is used. • It has a built-in hub function. • 2 DR Detectors can be connected via wired connection. • The expansion AeroDR Interface Unit is required for connecting the third to seventh DR Detectors via wired connection. • Relays signals between the X-ray device, the DR Detector, and the image processing controller.
(4)	Hub	• Used to connect the AeroDR Generator Interface Unit2 or access point. • General-purpose product. • Product conforming to IEC 60950 (CLASS I) or equivalent standards.
(5)	Detector Interface Unit	• Relays signals between the DR Detector and the image processing controller. • Supplies power to the DR Detector.
(6)	Detector Interface Unit 2	• Relays signals between the DR Detector and the image processing controller. • Supplies power to the DR Detector. • Relays signals for serial exposure.
(7)	Power Supply Unit	• Supplies power to the Detector Interface Unit, Detector Interface Unit 2, AeroDR Generator Interface Unit, AeroDR Generator Interface Unit2, Generator Interface Unit 3 and access point. • Relays signals between the Detector Interface Unit, Detector Interface Unit 2, AeroDR Generator Interface Unit, AeroDR Generator Interface Unit2, Generator Interface Unit 3, access point and the image processing controller.
(8)	AeroDR Generator Interface Unit	Relays signals between the X-ray device, the DR Detector, and the image processing controller.
(9)	AeroDR Generator Interface Unit2	Relays signals between the X-ray device, the DR Detector, and the image processing controller.
(10)	Generator Interface Unit 3	• Relays signals between the X-ray device, the DR Detector, and the image processing controller. • Relays signals for serial exposure, using GIU3 Serial I/F Kit.
(11)	AeroDR Battery Charger	Charges the DR Detector. It also has the registration function for the DR Detector.
(12)	AeroDR Battery Charger2	Charges the DR Detector. It also has the registration function for the DR Detector.
(13)	AeroDR Access Point	This communicates with DR Detector when performing an exposure using wireless connection.
(14)	Access Point	• This communicates with DR Detector when performing an exposure using wireless connection. • General-purpose product. • The AeroDR Access Point 2 is included.
(15)	I/F Cable	• This communicates with DR Detector when performing an exposure using wired connection. Also used for charging and registering the DR Detector. • I/F Cable4 1.5mD, I/F Cable4 8mD, and I/F Cable4 8mU relay signals for serial exposure.

Number	Name	Functions
(16)	AeroDR UF Cable	Registers the orientation when the DR Detector is used for exposure in the wall stand/table position.
(17)	Image processing controller	• Controls the reception, management, and output of image data. • Up to 7 DR Detectors can be registered.
(18)	AeroDR XG Cable	Performs signal relay between the X-ray device and the AeroDR Interface Unit2, AeroDR Generator Interface Unit and AeroDR Generator Interface Unit2.
(19)	AeroDR Collimator Cable	Performs exposure field signal relay between the X-ray device and the AeroDR Interface Unit2 or AeroDR Generator Interface Unit.
(20)	AeroDR S-SRM Cable	Performs signal relay between the X-ray device operation panel and AeroDR Interface Unit2, AeroDR Generator Interface Unit, and AeroDR Generator Interface Unit2.
(21)	S-SRM	Synchronizes AeroDR Interface Unit2, AeroDR Generator Interface Unit, and AeroDR Generator Interface Unit2 and X-ray device simply. Exposure is performed using the AeroDR Generator Interface Unit.

Basic connection example 1

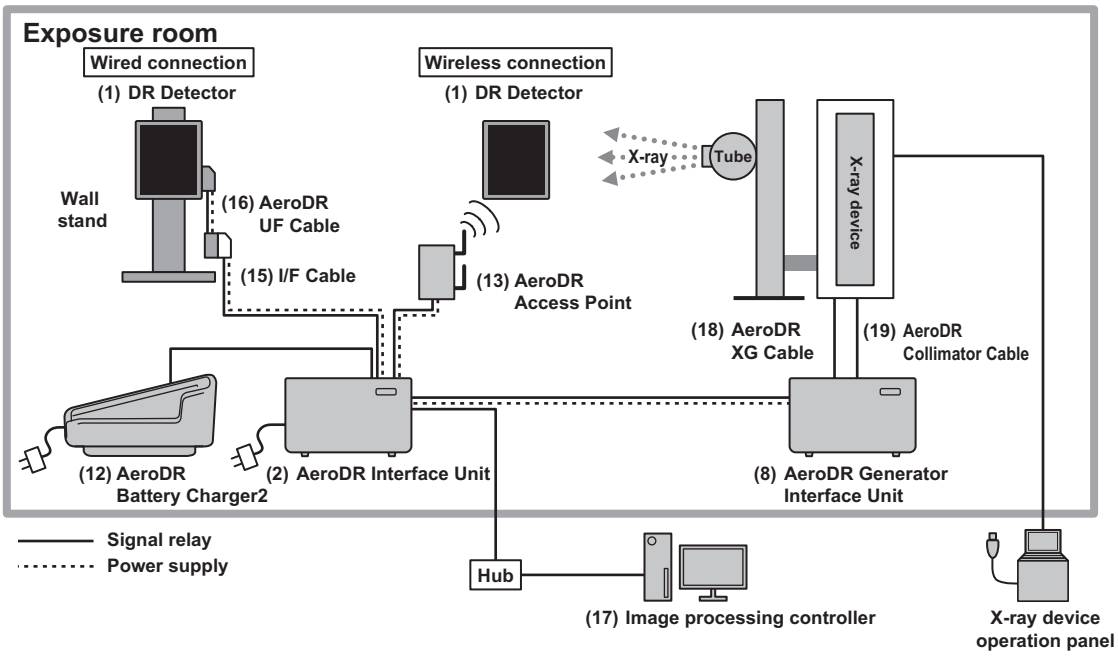

Basic connection example 2

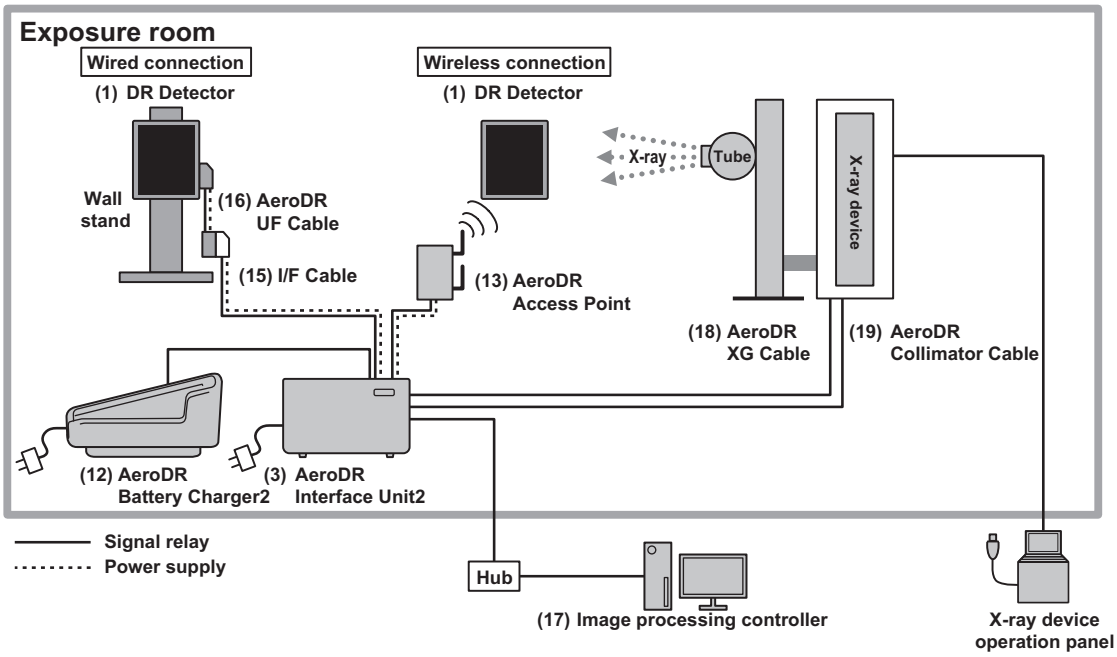

Basic connection example 3

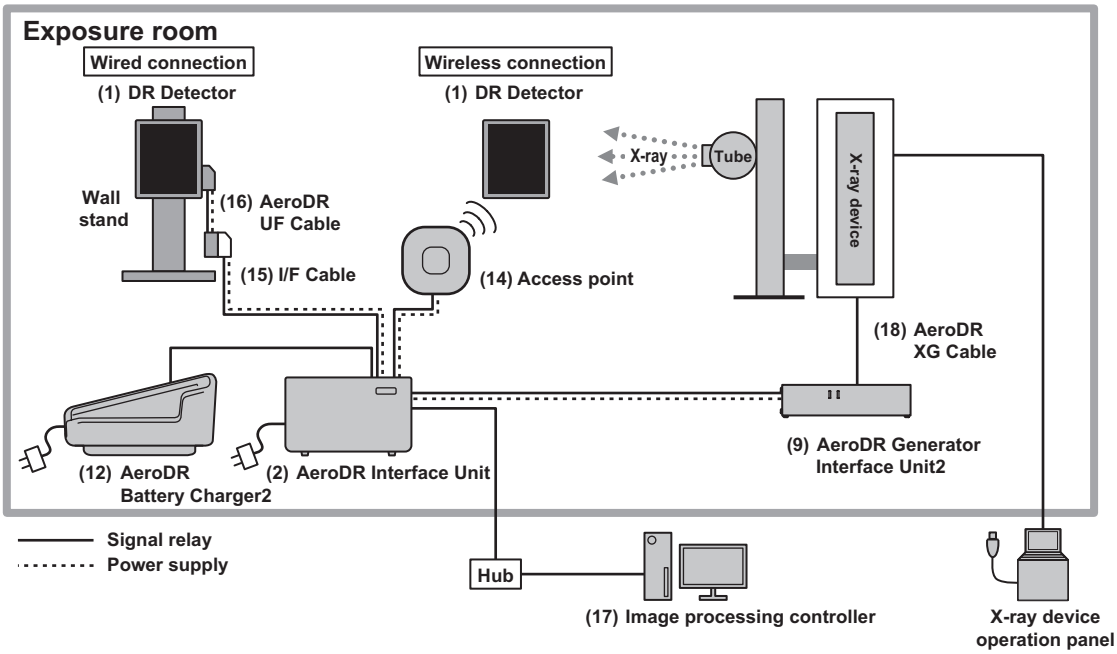

HINT

- The AeroDR Generator Interface Unit2 and access point can also be powered from the AC adapter.

Basic connection example 4

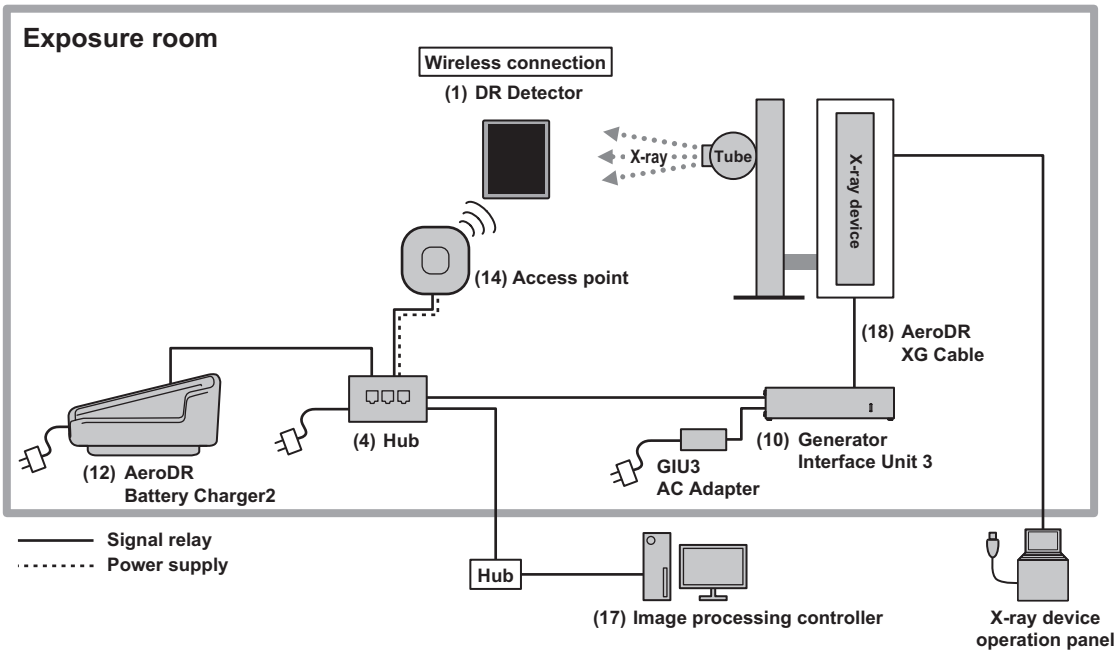

HINT

• The Generator Interface Unit 3 can also be powered from the GIU3 AC Adapter.

Basic connection example 5

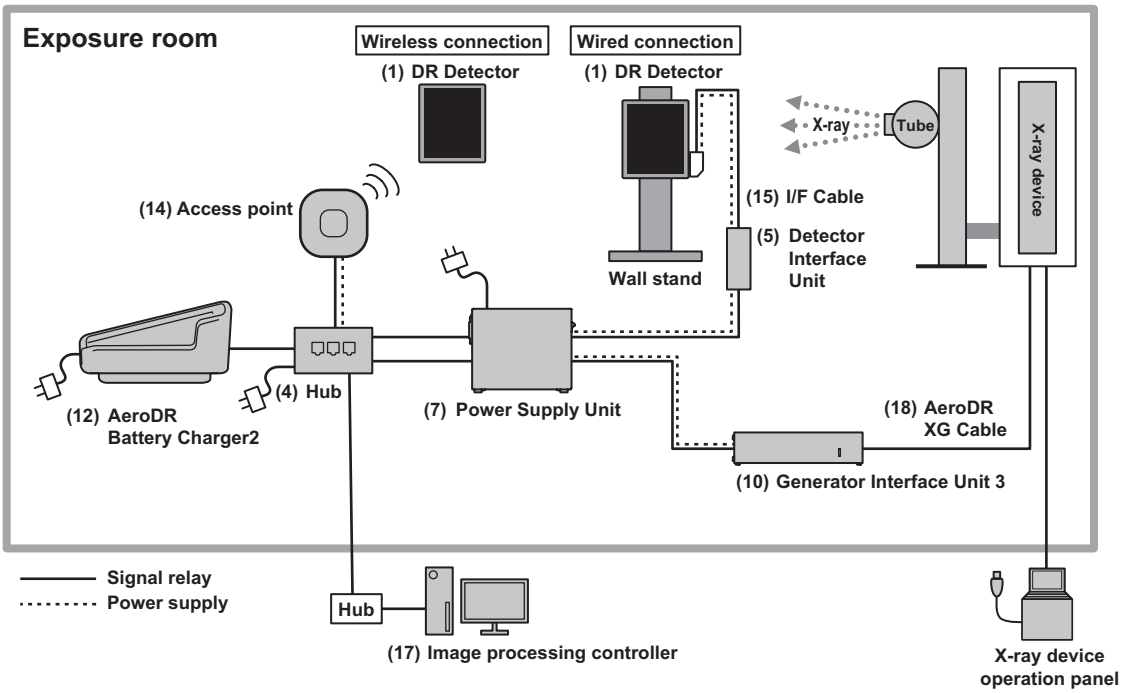

HINT

• The Detector Interface Unit can also be powered from the DI Unit AC Adapter.

S-SRM connection example 1

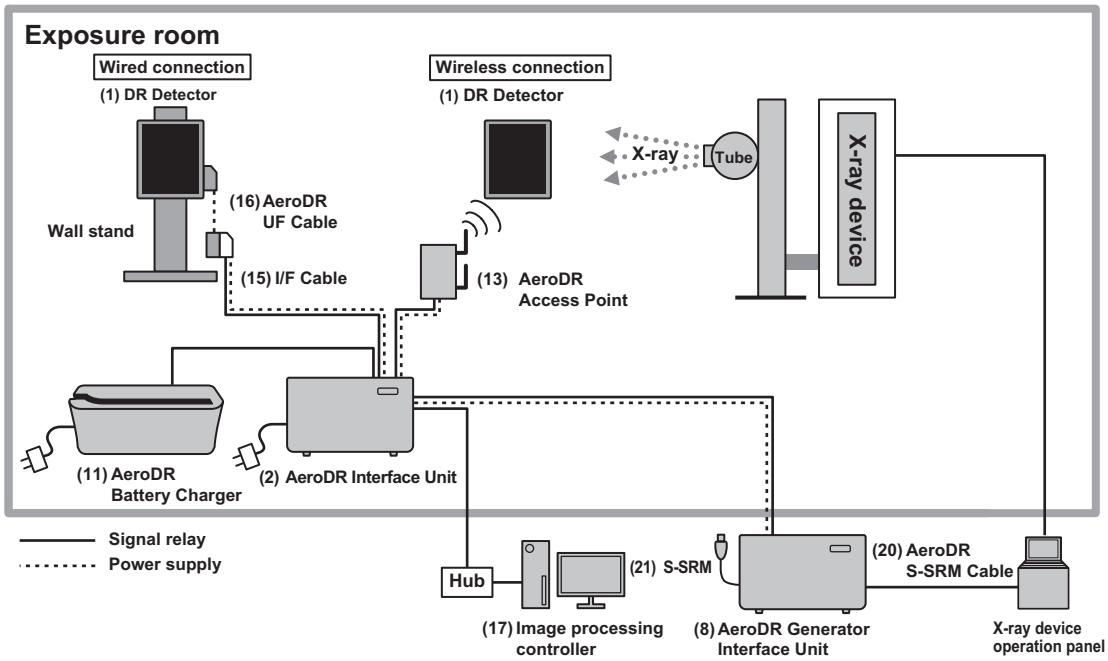

S-SRM connection example 2

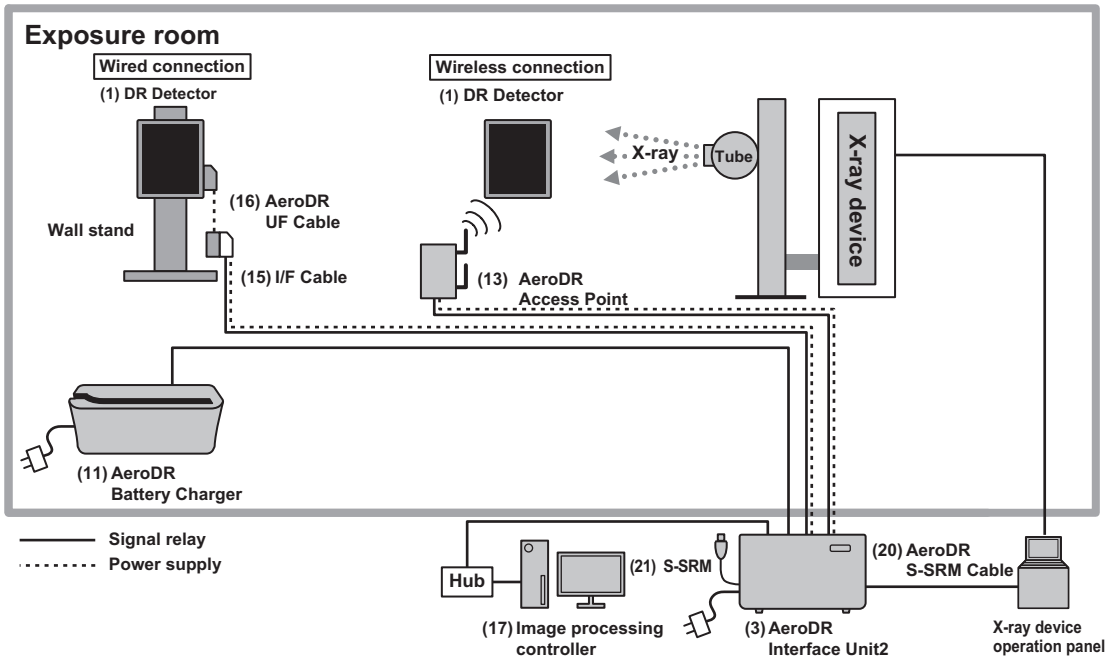

S-SRM connection example 3

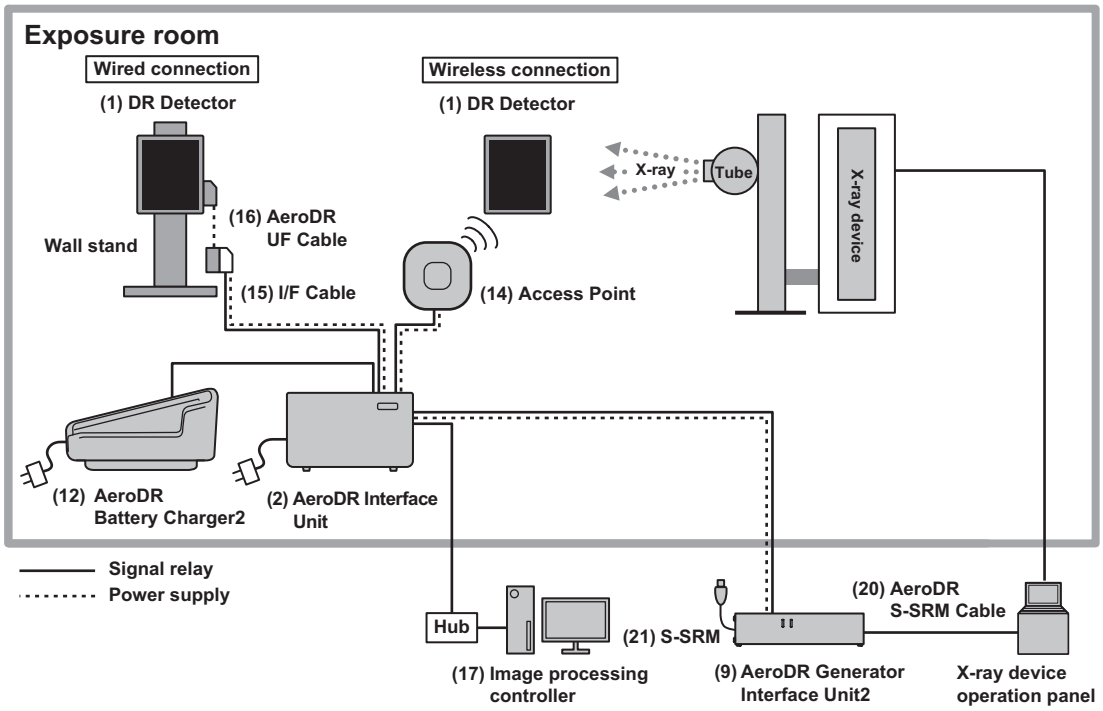

HINT

- The AeroDR Generator Interface Unit2 and access point can also be powered the AC adapter.

S-SRM connection example 4

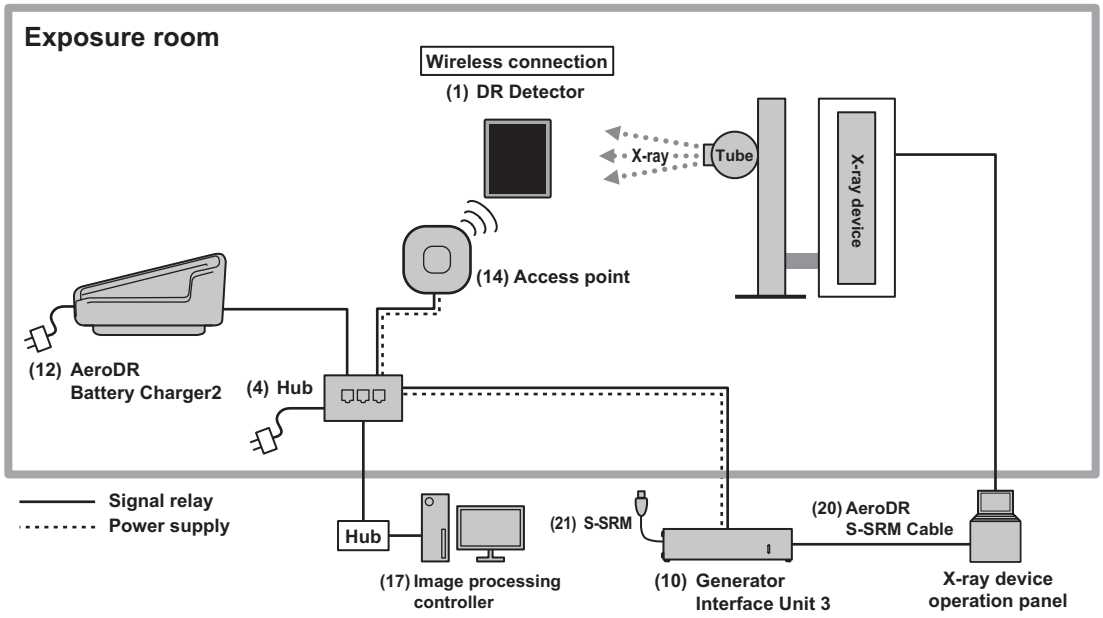

Aero Sync connection example 1

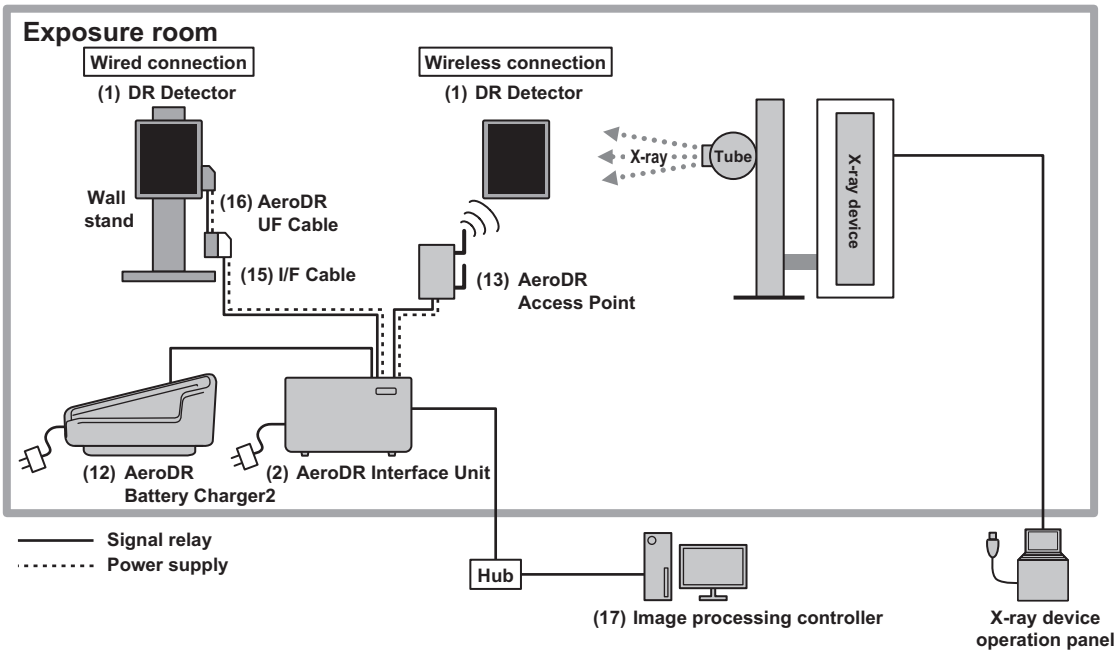

Aero Sync connection example 2

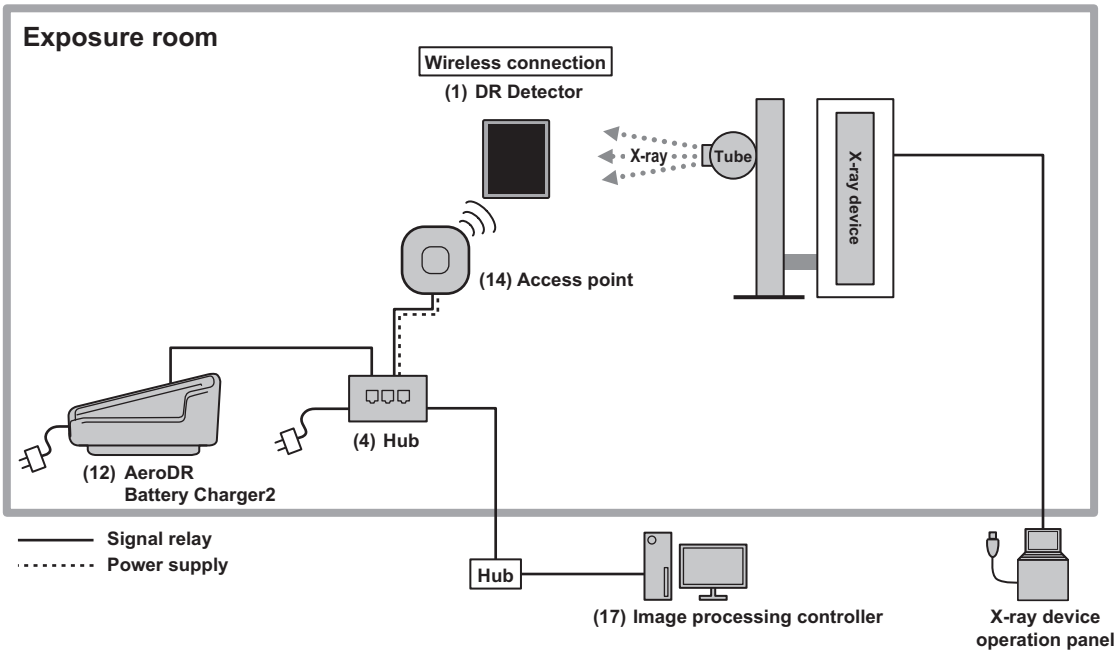

Serial exposure connection example

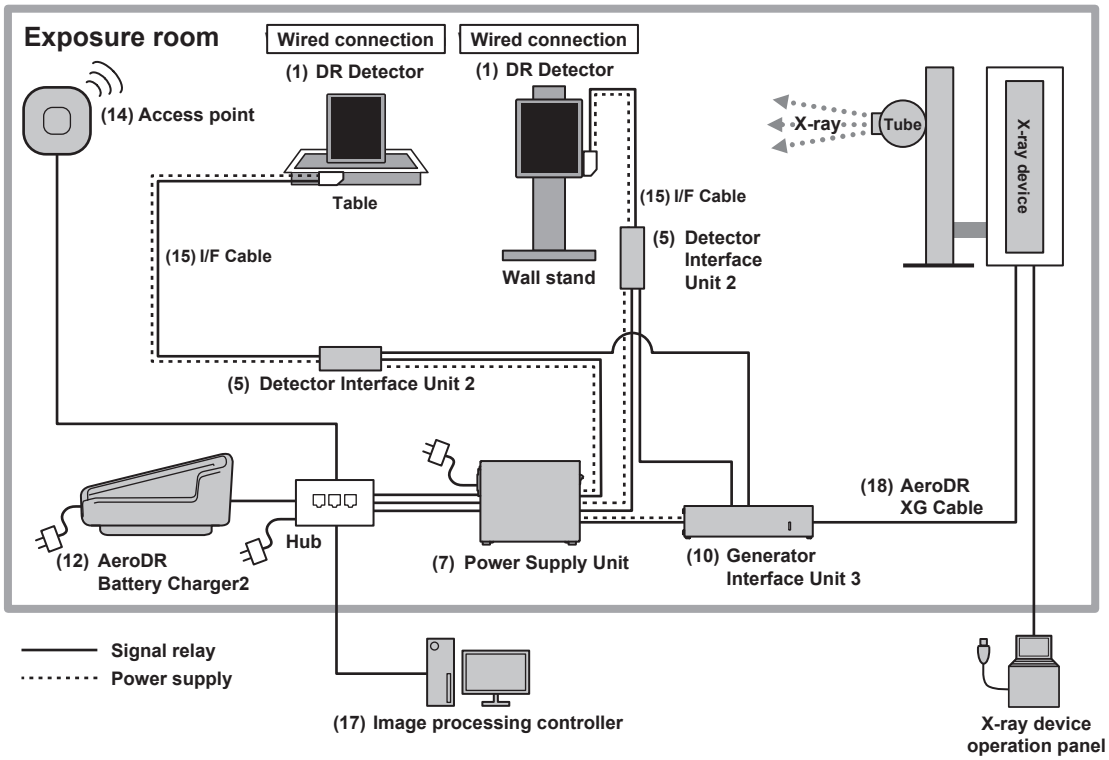

2.2 Component names and functions

2.2.1 AeroDR Detector

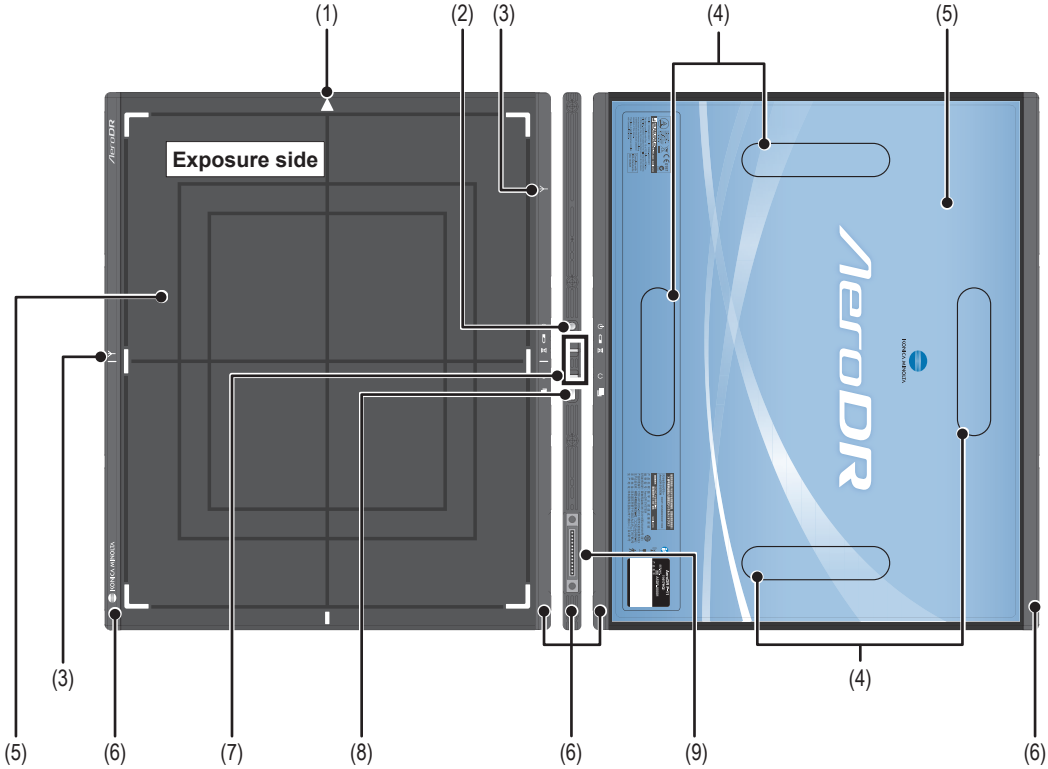

Number	Name	Functions
(1)	Triangular mark	• Indicates the direction to place the DR Detector in during exposure. — When exposing in portrait, place the triangular mark upward. — When exposing in landscape, place the triangular mark to the left or right. — (Left and right are set during installation according to the exposure environment.)
(2)	Power switch	Used to turn the DR Detector on/off.
(3)	Antenna display	Displays the place where a wireless antenna is attached.
(4)	AeroDR Grip sheet attachment areas	• Indicates the attachment positions for AeroDR Grip sheet use. • The AeroDR 1012HQ does not have AeroDR Grip sheet attachment areas.
(5)	Exterior	Protects the internal parts.
(6)	Protective cover	Absorbs external shocks.
(7)	LEDs	Indicate the status of the DR Detector.
(8)	Selection switch	Notifies the image processing controller that this DR Detector will be used for the exposure.
(9)	Wired connection connector	Connects to the AeroDR Battery Charger, AeroDR Battery Charger2, wired cable, and AeroDR UF Cable.

2.2.2 AeroDR 2 Detector

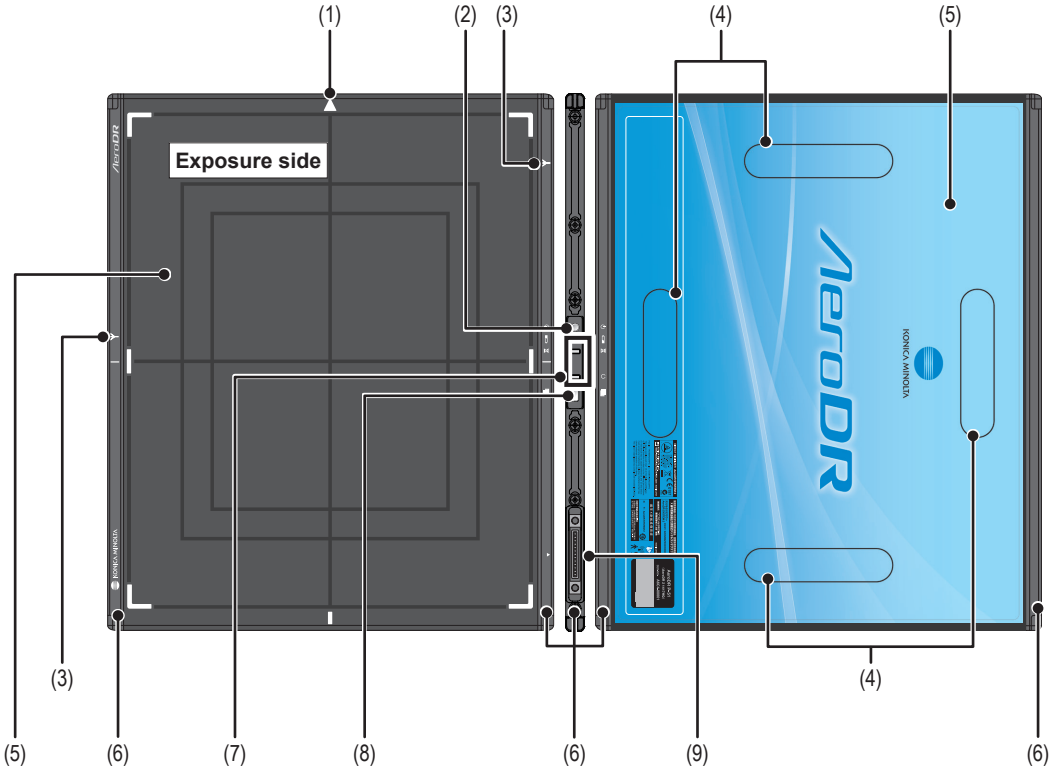

Number	Name	Functions
(1)	Triangular mark	• Indicates the direction to place the DR Detector in during exposure. — When exposing in portrait, place the triangular mark upward. — When exposing in landscape, place the triangular mark to the left or right. — (Left and right are set during installation according to the exposure environment.)
(2)	Power switch	Used to turn the DR Detector on/off.
(3)	Antenna display	Displays the place where a wireless antenna is attached.
(4)	AeroDR Grip sheet attachment areas	Indicates the attachment positions for AeroDR Grip sheet use.
(5)	Exterior	Protects the internal parts.
(6)	Protective cover	Absorbs external shocks.
(7)	LEDs	Indicate the status of the DR Detector.
(8)	Selection switch	Notifies the image processing controller that this DR Detector will be used for the exposure.
(9)	Wired connection connector	Connects to the AeroDR Battery Charger, AeroDR Battery Charger2, and wired cable.

2.2.3 AeroDR 3 Detector

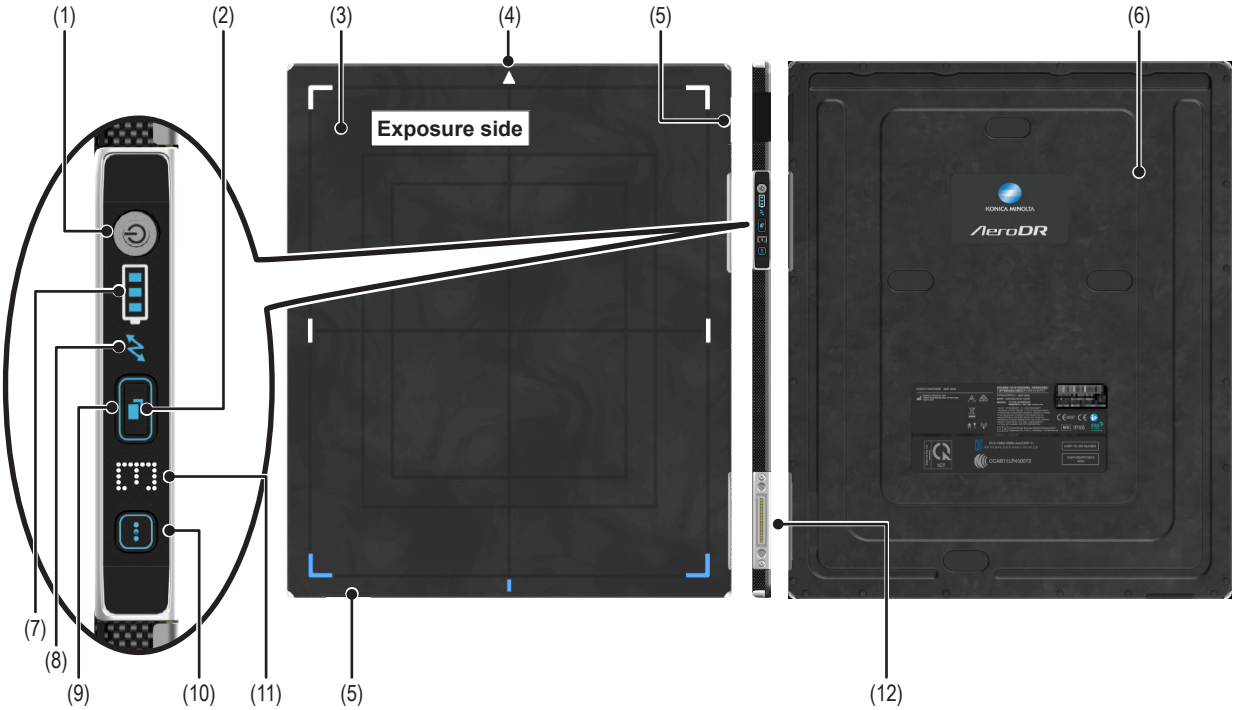

Number	Name	Functions
(1)	Power SW	Used to turn the DR Detector on/off.
(2)	Selection SW	Notifies the image processing controller that this DR Detector will be used for the exposure.
(3)	Front board	Protects the internal parts.
(4)	Triangular mark	• Indicates the direction to place the DR Detector in during exposure. — When exposing in portrait, place the triangular mark upward. — When exposing in landscape, place the triangular mark to the left or right. — (Left and right are set during installation according to the exposure environment.)
(5)	Antenna	Displays the place where a wireless antenna is attached.
(6)	Back board	Protects the internal parts.
(7)	Battery LED	Toggles DR Detector status displays and the modes.
(8)	LINK LED	
(9)	Status LED	
(10)	Mode LED	
(11)	Information LED	
(12)	Wired connection connector	Connects to the AeroDR Battery Charger2, and wired cable.

HINT

- AeroDR 3 1417HD, AeroDR 3 1717HD, AeroDR 3 1012HQ, AeroDR 3 1417HL, and AeroDR 3 1417SL have the back board with a different design.

2.2.4 AeroDR Interface Unit

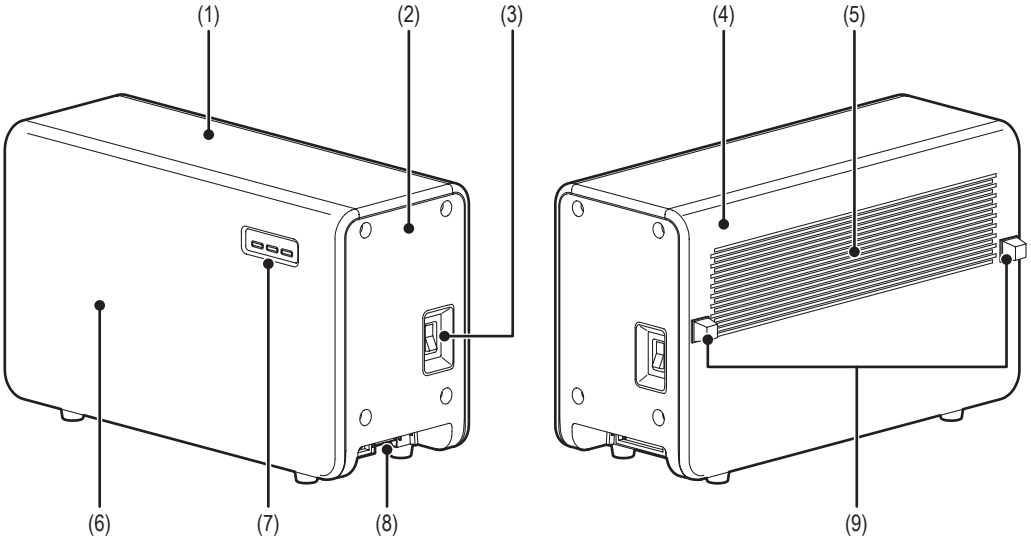

Number	Name	Functions
(1)	Top cover	Protects the internal parts.
(2)	Side cover	Protects the internal parts.
(3)	Power switch	Turns the AeroDR Interface Unit on/off.
(4)	Rear cover	Protects the internal parts.
(5)	Exhaust outlet	Exhausts internal heat.
(6)	Front cover	Protects the internal parts.
(7)	LEDs	Indicate the status of the AeroDR Interface Unit.
(8)	Cable outlet	Outlet for various cables.
(9)	Spacer	Prevents exhaust outlet from being blocked after installation.

2.2.5 AeroDR Interface Unit2

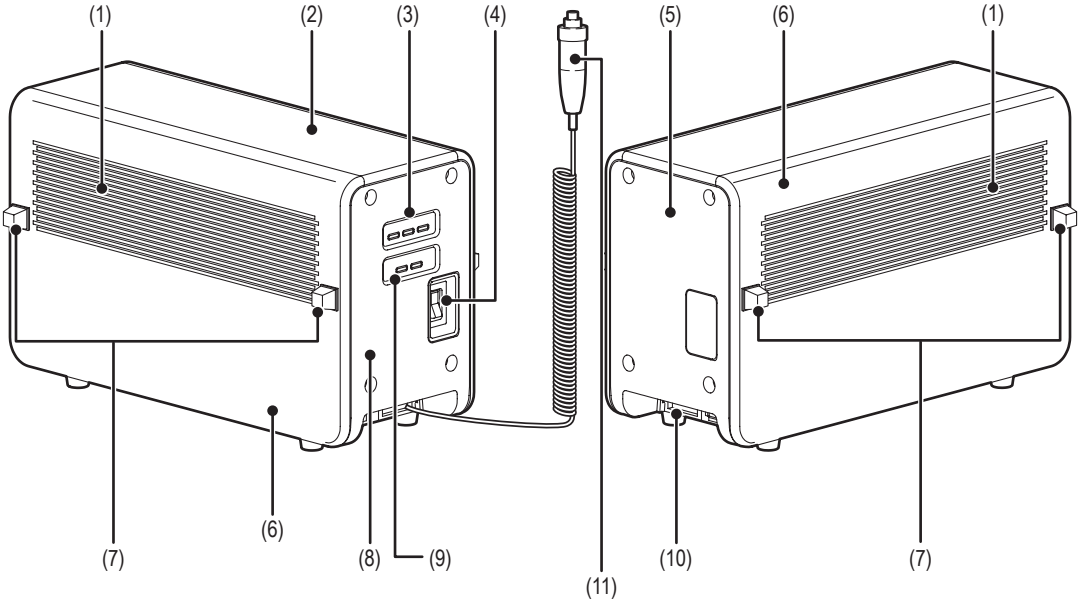

Number	Name	Functions
(1)	Exhaust outlet	Exhausts internal heat.
(2)	Top cover	Protects the internal parts.
(3)	Detector Connection LEDs	Indicate the status of the AeroDR Interface Unit2.
(4)	Power switch	Turns the AeroDR Interface Unit2 on/off.
(5)	Rear cover	Protects the internal parts.
(6)	Side cover	Protects the internal parts.
(7)	Spacer	• Prevents exhaust outlet from being blocked after installation. • No spacers may be provided on some side covers that will not come in contact with walls.
(8)	Front cover	Protects the internal parts.
(9)	Generator Interface LEDs	Indicate the status of the AeroDR Interface Unit2.
(10)	Cable outlet	Outlet for various cables.
(11)	Hand switch	When S-SRM connection is adopted, a hand switch is installed in the AeroDR Interface Unit2.

2.2.6 Detector Interface Unit

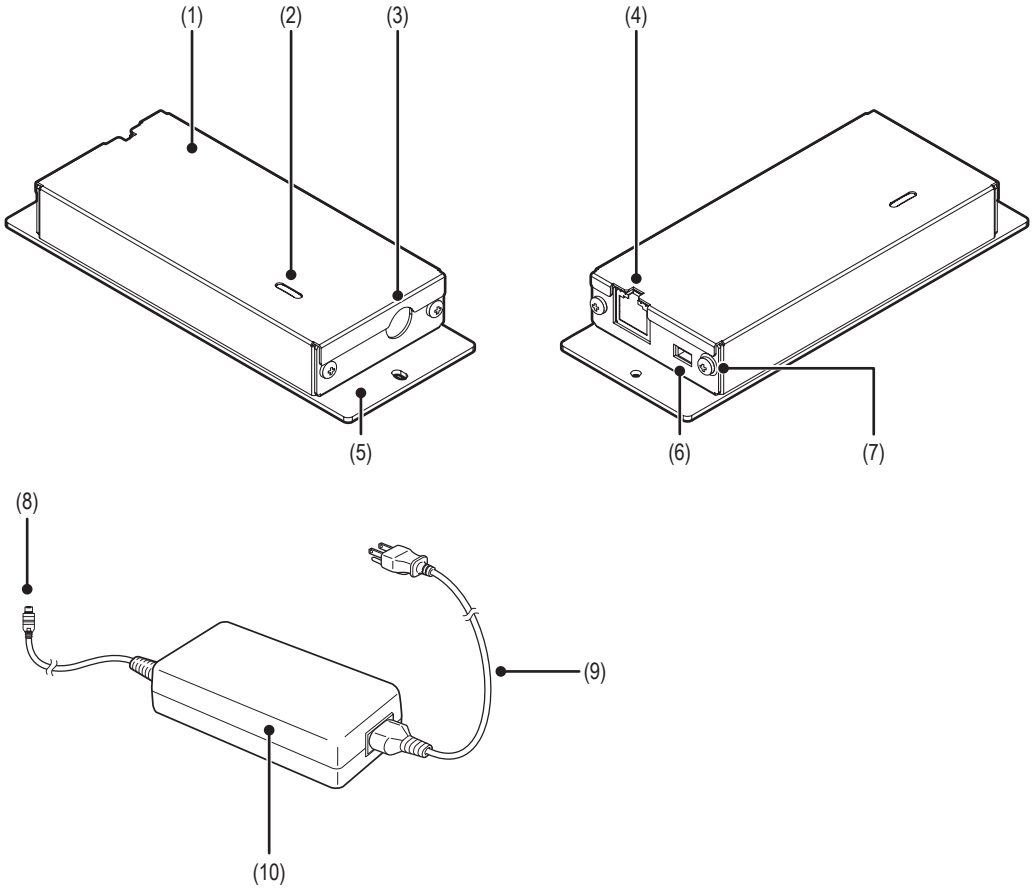

Number	Name	Functions
(1)	Base cover	Protects the internal parts.
(2)	LED	Indicates the status of the Detector Interface Unit.
(3)	Cable outlet	Outlet for I/F Cable.
(4)	LAN port	Connects to the Ethernet cable.
(5)	Unit fixed plate	Used to attach this device to a wall stand or table, etc.
(6)	Power cable connector socket	This is the socket of the Power cable connector.
(7)	Location for connecting the grounding cable	Used to connect the grounding cable. Not usually used.
(8)	Power cable connector	Plug into the power cable socket of Detector Interface Unit.
(9)	Power cable	
(10)	AC adapter	

2.2.7 Detector Interface Unit 2

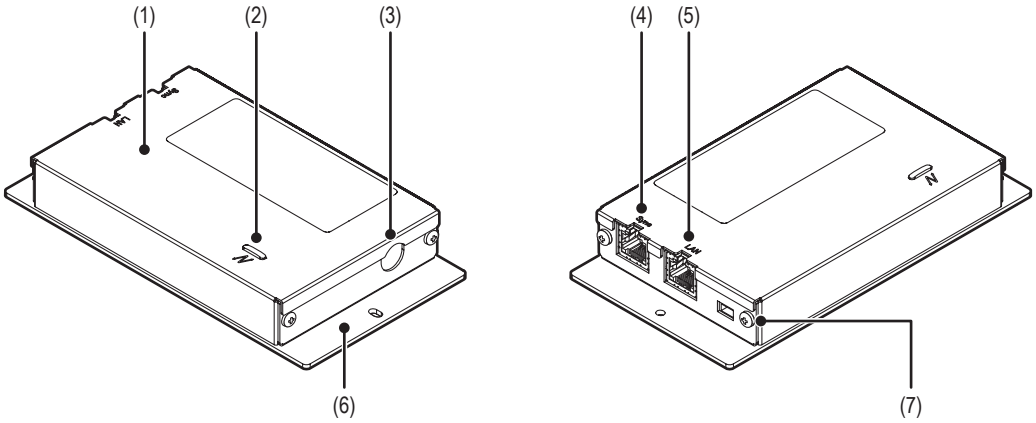

Number	Name	Functions
(1)	Top plate	Protects the internal parts.
(2)	LED	Indicates the status of the Detector Interface Unit 2.
(3)	Cable outlet	Outlet for I/F Cable.
(4)	Sync port	• Connects to the Ethernet cable. • Relays signals for serial exposure.
(5)	LAN port	Connects to the Ethernet cable.
(6)	Unit fixed plate	Used to attach this device to a wall stand or table, etc.
(7)	Location for connecting the grounding cable	Used to connect the grounding cable. Not usually used.

2.2.8 Power Supply Unit

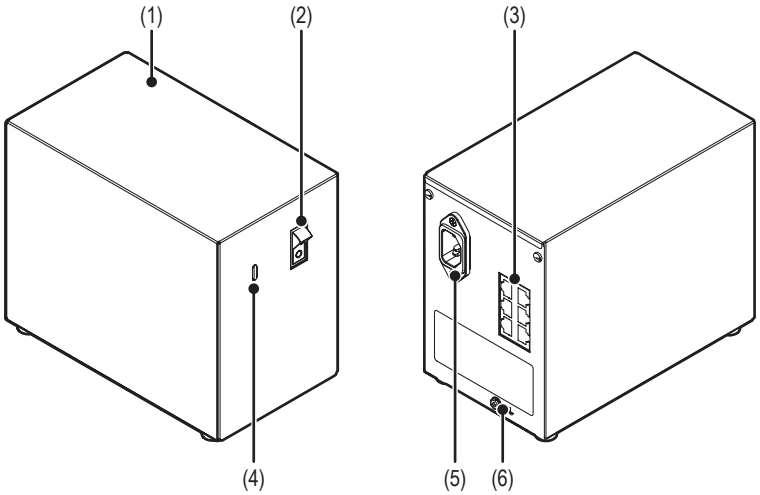

Number	Name	Functions
(1)	Base cover	Protects the internal parts.
(2)	Power switch	Turns the Power Supply Unit on/off.
(3)	LAN port	Connects to the Ethernet cable.
(4)	LED	Indicates the status of the Power Supply Unit.
(5)	Inlet	Connects to the power cable of Power Supply Unit.
(6)	Location for connecting the grounding cable	Used to connect the grounding cable. Not usually used.

2.2.9 AeroDR Generator Interface Unit

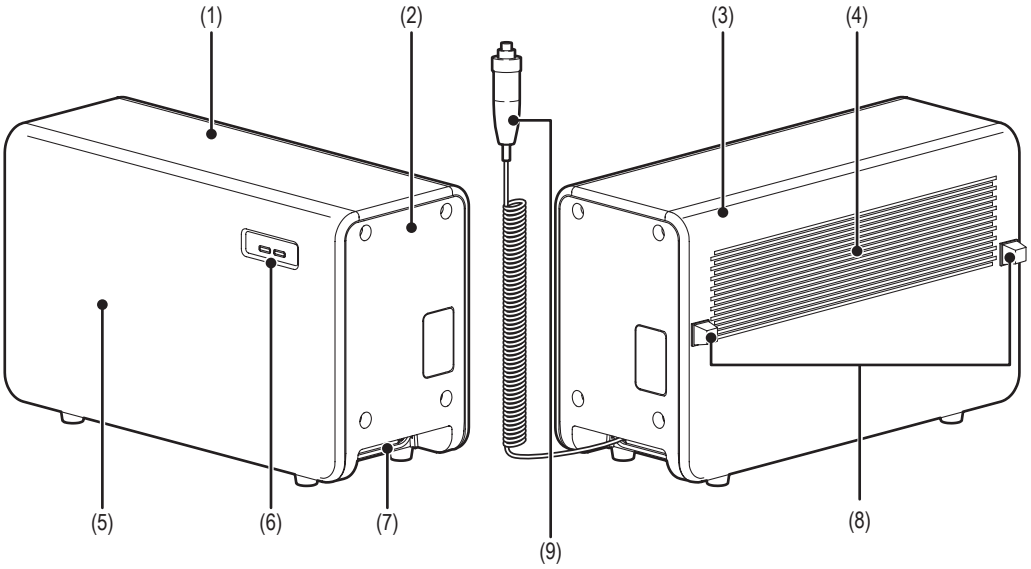

Number	Name	Functions
(1)	Top cover	Protects the internal parts.
(2)	Side cover	Protects the internal parts.
(3)	Rear cover	Protects the internal parts.
(4)	Exhaust outlet	Exhausts internal heat.
(5)	Front cover	Protects the internal parts.
(6)	LEDs	Indicate the status of the AeroDR Generator Interface Unit.
(7)	Cable outlet	Outlet for various cables.
(8)	Spacer	Prevents exhaust outlet from being blocked after installation.
(9)	Hand switch	When S-SRM connection is adopted, a hand switch is installed in the AeroDR Generator Interface Unit.

2.2.10 AeroDR Generator Interface Unit2

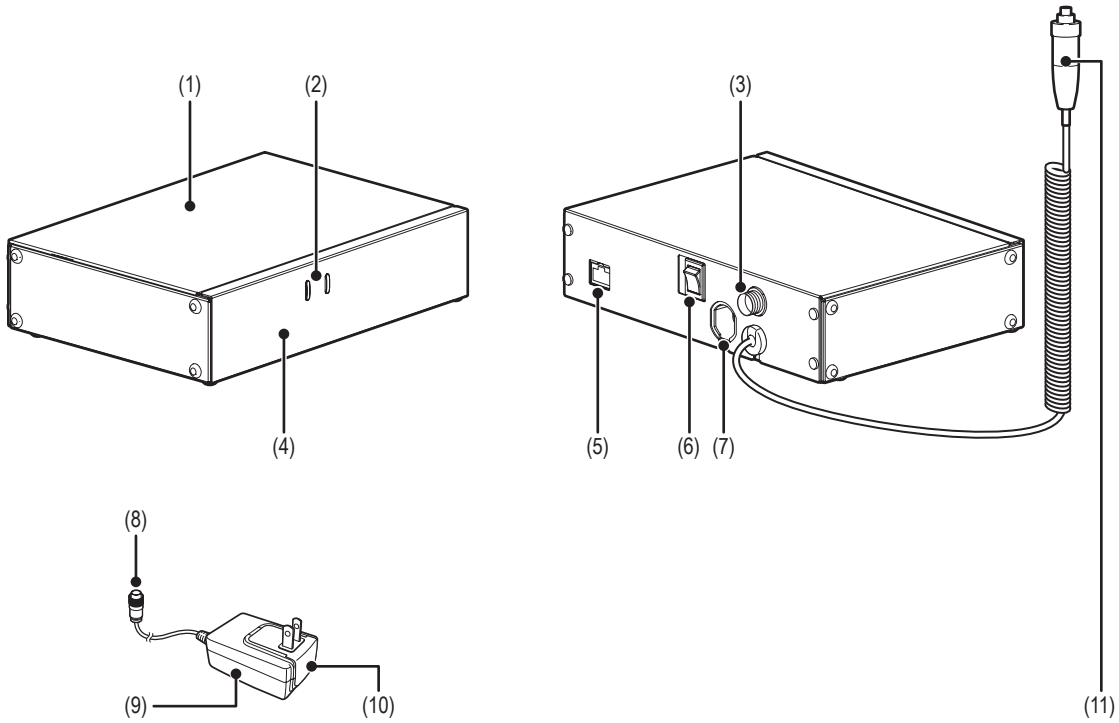

Number	Name	Functions
(1)	Base cover	Protects the internal parts.
(2)	LEDs	Indicate the status of the AeroDR Generator Interface Unit2.
(3)	Power cable connector socket	This is the socket of the Power cable connector.
(4)	Base BOX	Protects the internal parts.
(5)	LAN port	Connects to the Ethernet cable.
(6)	Power switch	• Used to turn the AeroDR Generator Interface Unit2 on/off. • It is only installed when the AC adapter is used.
(7)	X-ray link cable outlet	Outlet for various X-ray link cables.
(8)	Power cable connector	Plug into the power cable socket of AeroDR Generator Interface Unit2.
(9)	AC adapter	Used to supply power to the AeroDR Generator Interface Unit2.
(10)	Power plug	
(11)	Hand switch	When S-SRM connection is adopted, a hand switch is installed in the AeroDR Generator Interface Unit2.

2.2.11 Generator Interface Unit 3

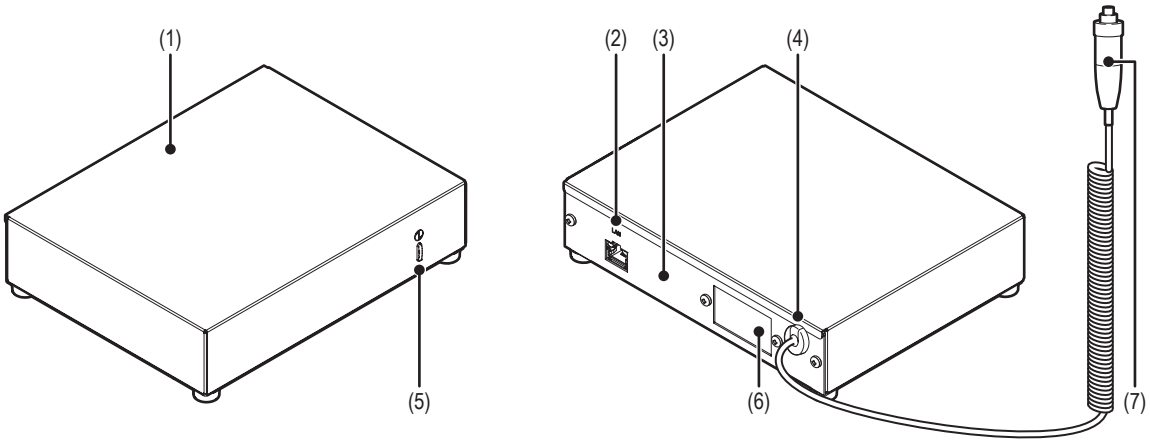

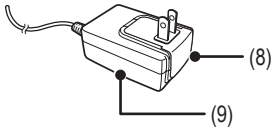

Number	Name	Functions
(1)	Cover	Protects the internal parts.
(2)	LAN port	Connects to the Ethernet cable.
(3)	Base	Protects the internal parts.
(4)	X-ray link cable outlet	Outlet for various X-ray link cables.
(5)	LED	Indicates the status of the Generator Interface Unit 3.
(6)	Location for connecting the GIU3 Serial I/F Kit or GIU3 AC Adapter	Positions to attach GIU3 Serial I/F Kit or GIU3 AC Adapter. The illustration shows an example with GIU3 AC Adapter attached.
(7)	Hand switch	When S-SRM connection is adopted, a hand switch is installed in the Generator Interface Unit 3.
(8)	Power plug	Used to supply power to the Generator Interface Unit 3.
(9)	AC adapter	

2.2.12 AeroDR Battery Charger

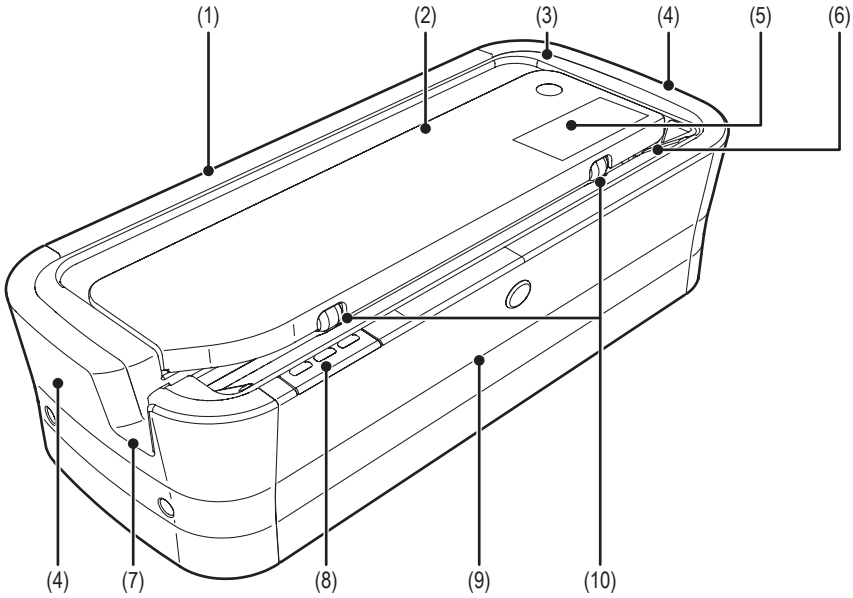

Number	Name	Functions
(1)	Rear cover	Protects the internal parts.
(2)	Slide cover	Protects the internal parts, and prevents dust from getting inside the AeroDR Battery Charger.
(3)	Top cover	Protects the internal parts.
(4)	Side cover	Protects the internal parts.
(5)	Charge/registration label	When an AeroDR Battery Charger exclusively for charge is used, a label that distinguishes the AeroDR Battery Charger exclusively for charge from an AeroDR Battery Charger that is used for charge and registration is affixed.
(6)	DR Detector insert table (front)	Guide for inserting the DR Detector from the front.
(7)	DR Detector insert table (side)	Guide for inserting the DR Detector from the side.
(8)	LEDs	Indicates the status between the DR Detector and the AeroDR Battery Charger.
(9)	Front cover	Protects the internal parts.
(10)	Roller	Prevents external friction when you insert the DR Detector.

2.2.13 AeroDR Battery Charger2

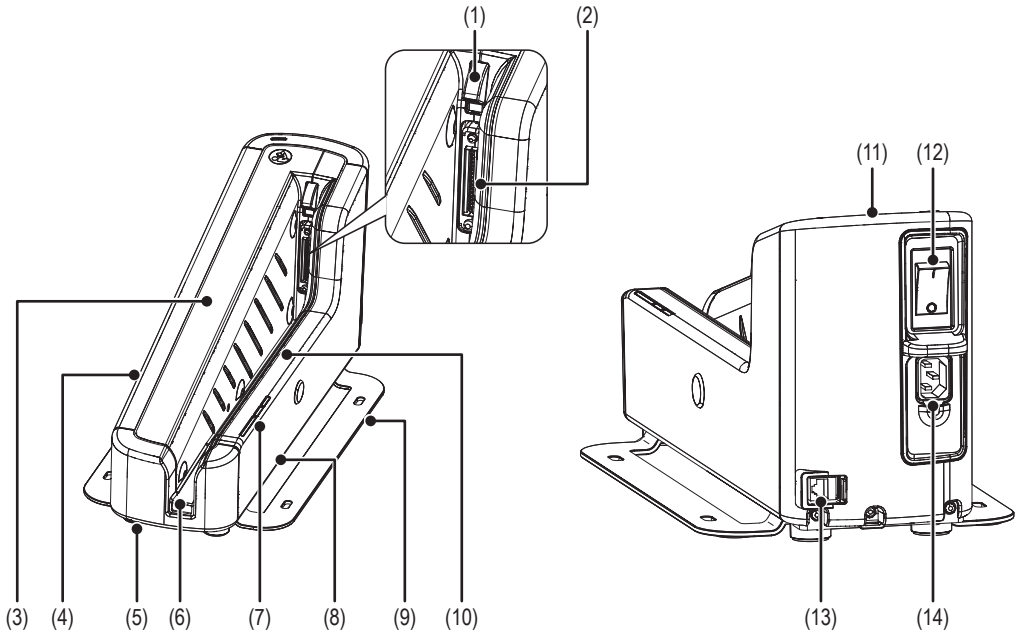

Number	Name	Functions
(1)	Connector cover	Protects the wired connection connector and prevents dust from entering inside it.
(2)	Wired connection connector	Connects to the wired connection connector of the DR Detector.
(3)	Rear insert guide	Protects the internal parts.
(4)	Rear cover	Protects the internal parts.
(5)	Side cover (left)	Protects the internal parts.
(6)	DR Detector insert table	A guide for inserting the DR Detector.
(7)	LEDs	Indicate the status of the DR Detector and AeroDR Battery Charger2.
(8)	Front cover	Protects the internal parts.
(9)	Stand	Protects the AeroDR Battery Charger2 from being overturned.
(10)	Front insert guide	Protects the internal parts.
(11)	Side cover (right)	Protects the internal parts.
(12)	Power switch	Used to turn the AeroDR Battery Charger2 on/off.
(13)	LAN connector	Connects to the Ethernet cable.
(14)	Inlet	Connects to the power cable of AeroDR Battery Charger2.

2.2.14 AeroDR Access Point

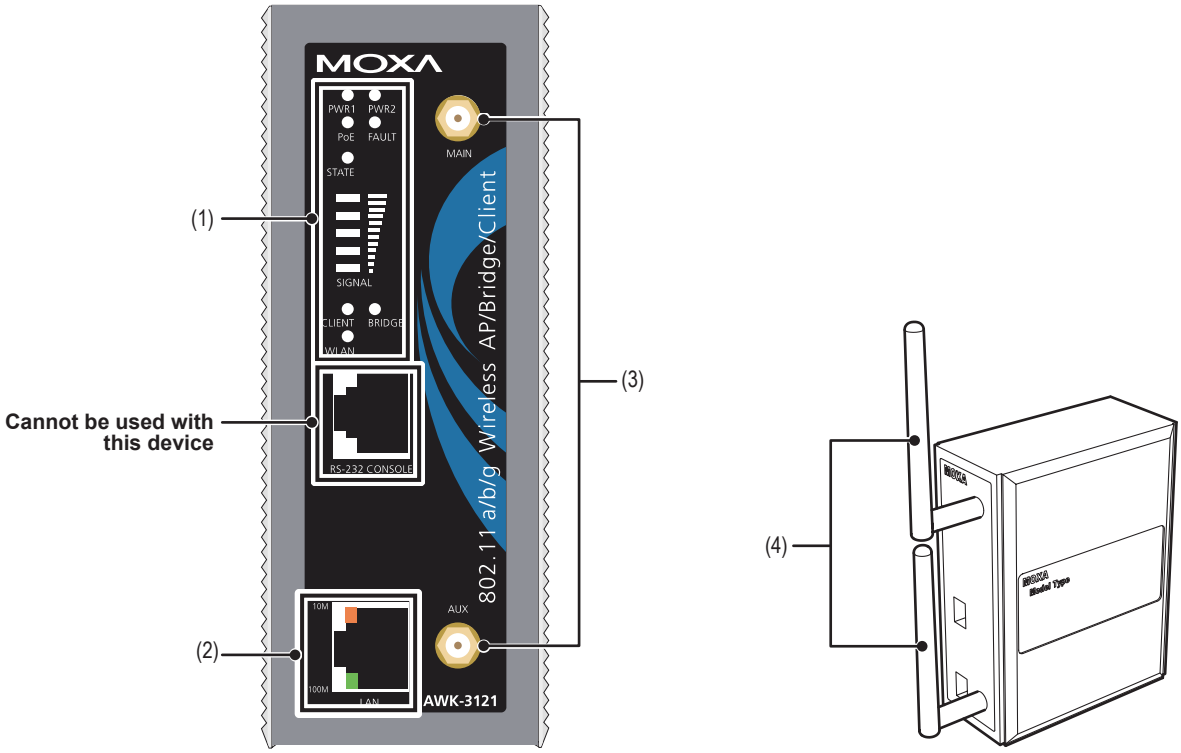

Number	Name	Functions
(1)	LEDs	Indicate the status of the AeroDR Access Point.
(2)	10/100BASE-T(X) RJ45 port	Used for connection to the AeroDR Interface Unit or AeroDR Interface Unit2.
(3)	Antenna port	Port to attach antenna.
(4)	Antenna	Receives wireless signal.

2.2.15 I/F Cable

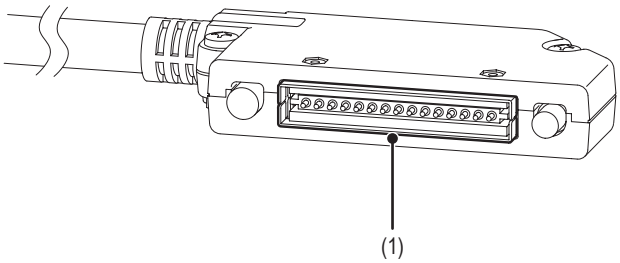

Number	Name	Functions
(1)	Spring connector	Connects to the wired connection connector of the DR Detector or AeroDR UF Cable.

2.2.16 AeroDR UF Cable

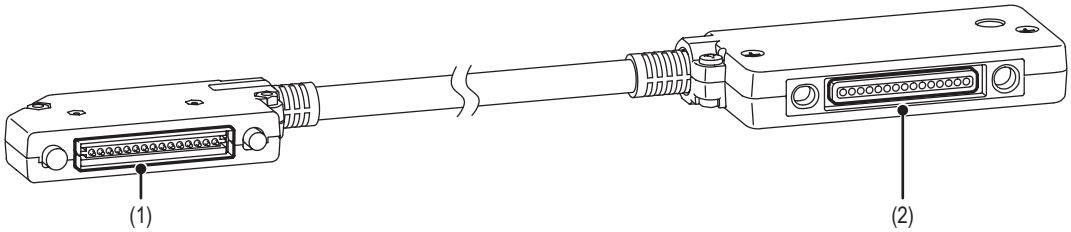

Number	Name	Functions
(1)	Spring connector	Connects to the wired connection connector of the DR Detector.
(2)	Wired connection connector	Connects to the spring connector of the I/F Cable.

Chapter 3

General Operations

3.1 Startup and shutdown

Normally, this device is used with the power on. When not used for more than 1 day, operate the startup/shutdown as follows.

HINT

- There is no specific sequence which should be started up first, this device or the image processing controller.
- If the power synchronization function of the DR Detector is enabled and the wired cable is connected, the startup / shutdown of the DR Detector will be performed along with the startup / shutdown of the synchronizing device.
- Refer to the "Operation Manual" of the image processing controller regarding on/off for the image processing controller.

3.1.1 Startup of this device

AeroDR Detector, AeroDR 2 Detector

IMPORTANT

- Do not use a sharp object to operate the switch; doing so may damage the AeroDR 2 1417HQ and AeroDR 2 1417S.

1 Prepare the DR Detector.

- If the DR Detector is inserted into the AeroDR Battery Charger or AeroDR Battery Charger2 with a wireless connection, the DR Detector should be removed.
- For a wired connection, confirm that the wired cable is connected securely to the wired connection connector of the DR Detector.

2 Press and hold the power switch for 2 seconds to turn it on, and confirm that the LED (green) is slowly flashing or lit.

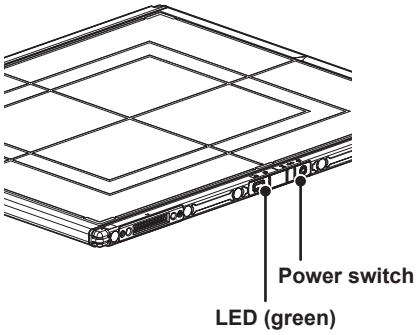

AeroDR 3 Detector

1 Prepare the DR Detector.

- If the DR Detector is inserted into the AeroDR Battery Charger2 with a wireless connection, the DR Detector should be removed.
- For a wired connection, confirm that the wired Cable is connected securely to the wired connection connector of the DR Detector.

2 Press and hold the power switch for 2 seconds to turn it on, and confirm that the Information LED (white) goes out gradually in the steps of lighting, flashing and slowly flashing and then the Battery LED (blue/orange) is on.

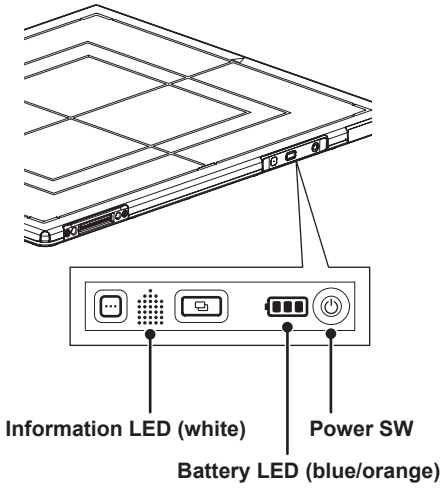

HINT

- The Battery LED changes according to the level of battery power of the DR Detector.

AeroDR Interface Unit

1 Turn on the power switch, and confirm that the LED (green) is on.

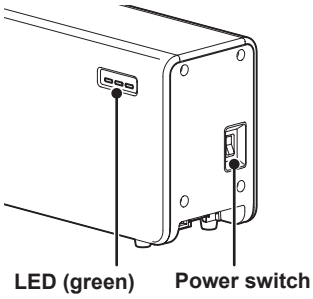

AeroDR Interface Unit2

1 Turn on the power switch, and confirm that the Detector Connection LED (green) and Generator Interface LED (green) are on.

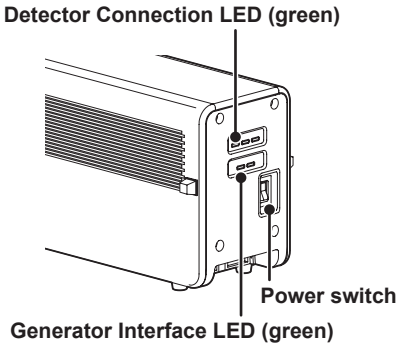

HINT

- It takes time for the Generator Interface LED (green) to light.

Detector Interface Unit

IMPORTANT

- For power supply through PoE, supply the power from the Power Supply Unit.

1 Turn on the power switch of the Power Supply Unit, and confirm that the LED (green) is on.

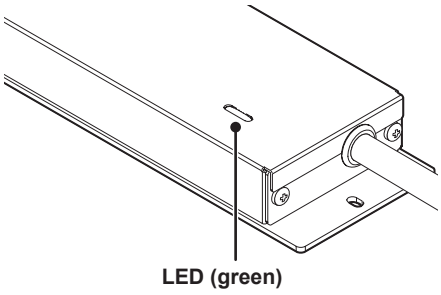

HINT

- When DR Detector is connected, the LED (blue) is on.
- When using the DI Unit AC Adapter, connect the power cable to a wall outlet and confirm that the LED (green) is on.

Detector Interface Unit 2

IMPORTANT

- For power supply through PoE, supply the power from the Power Supply Unit.

1 Turn on the power switch of the Power Supply Unit, and confirm that the LED (green) is on.

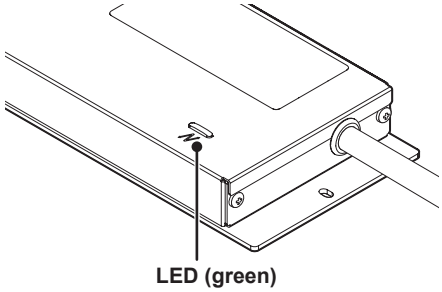

HINT

- When DR Detector is connected, the LED (blue) is on.

Power Supply Unit

1 Turn on the power switch, and confirm that the LED (blue) is on.

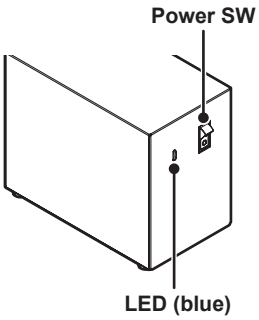

AeroDR Generator Interface Unit

1 Turn on the power switch of the Power Source Device, and confirm that the LED (green) is flashing.

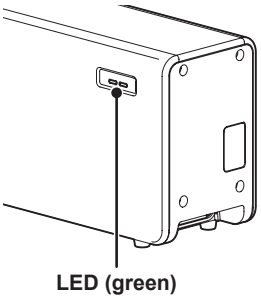

AeroDR Generator Interface Unit2

1 Turn on the power switch of the Power Source Device, and confirm that the LED (green) is flashing.

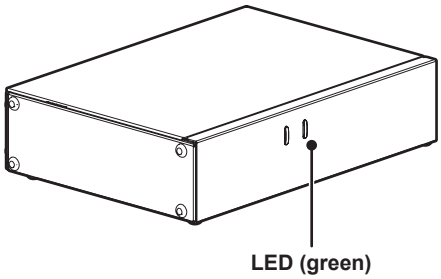

HINT

- When using the AC adapter, turn the power switch of the AeroDR Generator Interface Unit2 on, and confirm that the LED (green) is flashing.

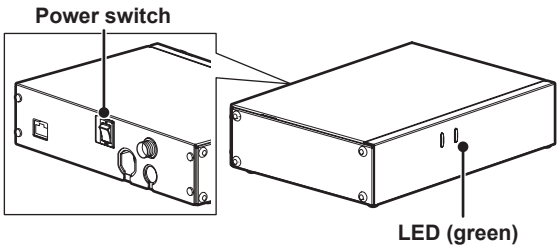

Generator Interface Unit 3

1 Turn on the power switch of the Power Source Device, and confirm that the LED (blue) flashes.

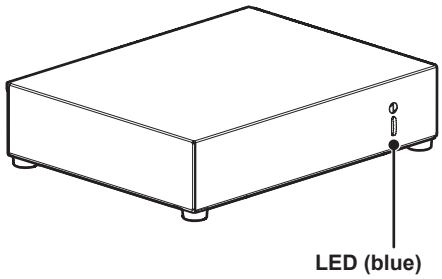

HINT

- When using the GIU3 AC Adapter, confirm that the Generator Interface Unit 3 is turned on when the power plug is connected to a wall outlet and the LED (blue) lights.

AeroDR Battery Charger

1 Connect the power cable to a wall outlet, and confirm that the LED (green) slowly flashes.

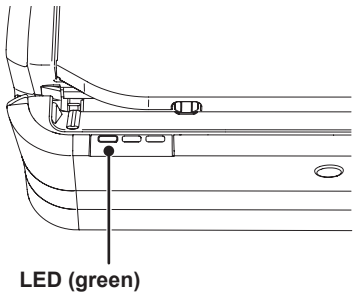

AeroDR Battery Charger2

1 Turn on the power switch, and confirm that the LED (green) slowly flashes.

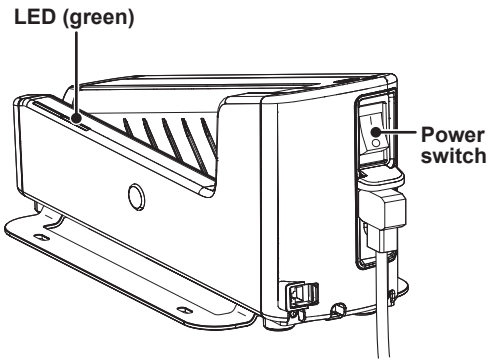

AeroDR Access Point

1 Turn on the power switch of the Power Source Device, and confirm that the LED (umber) is on.

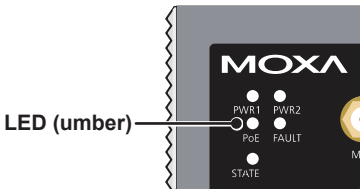

3.1.2 Shutdown of this device

AeroDR Detector, AeroDR 2 Detector

IMPORTANT

- Do not use a sharp object to operate the switch; doing so may damage the AeroDR 2 1417HQ and AeroDR 2 1417S.

1 Press and hold the power switch for 5 seconds to turn it off, and confirm that the LED (green) is turned off.

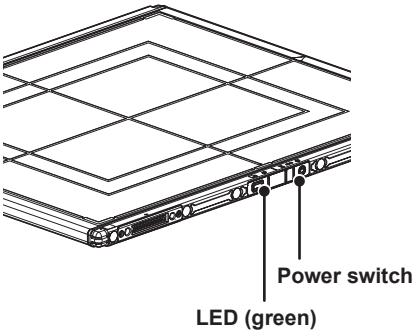

AeroDR 3 Detector

1 Press and hold the power switch for 5 seconds to turn it off, and confirm that the Information LED (white) goes out gradually in the steps of lighting, flashing and slowly flashing and then the Battery LED (blue/orange) is off.

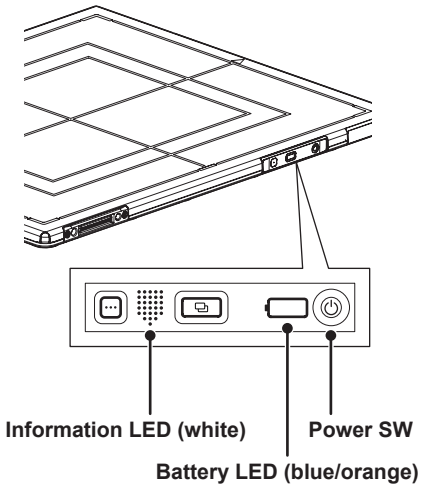

AeroDR Interface Unit

1 Turn off the power switch, and confirm that the LED (green) is off.

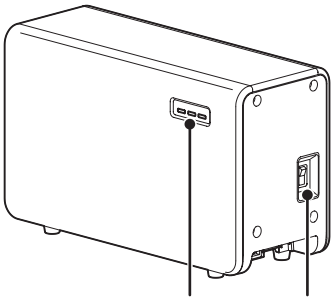

AeroDR Interface Unit2

1 Turn off the power switch, and confirm that the Detector Connection LED (green) and the Generator Interface LED (green) are off.

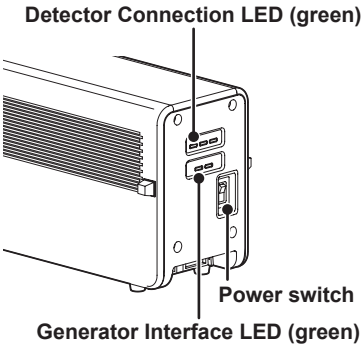

Detector Interface Unit

1 Turn off the power switch of the Power Supply Unit, and confirm that the LED (green) is off.

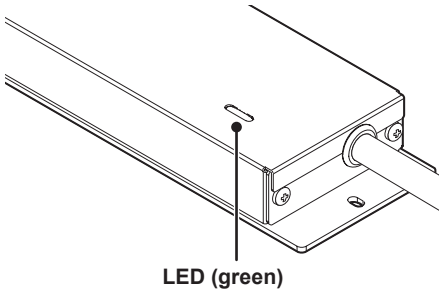

HINT

- When DR Detector is connected, the LED (blue) is off.
- When using the DI Unit AC Adapter, disconnect the power cable from the wall outlet and confirm that the LED (green) is off.

Detector Interface Unit 2

1 Turn off the power switch of the Power Supply Unit, and confirm that the LED (green) is off.

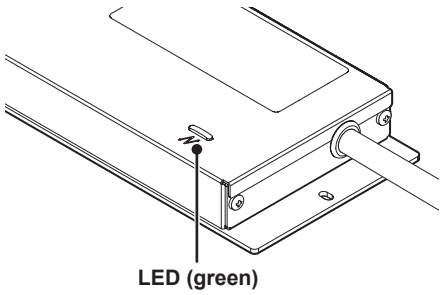

HINT

- When DR Detector is connected, the LED (blue) is off.

Power Supply Unit

1 Turn off the power switch, and confirm that the LED (blue) is off.

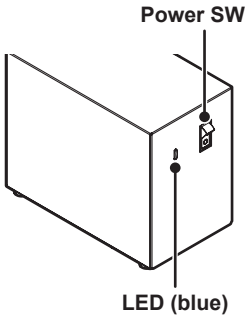

AeroDR Generator Interface Unit

1 Turn off the power switch of the Power Source Device, and confirm that the LED (green) is off.

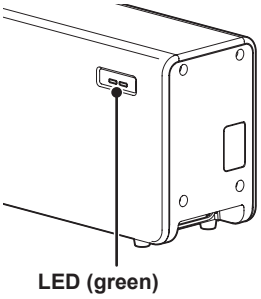

AeroDR Generator Interface Unit2

1 Turn off the power switch of the Power Source Device, and confirm that the LED (green) is off.

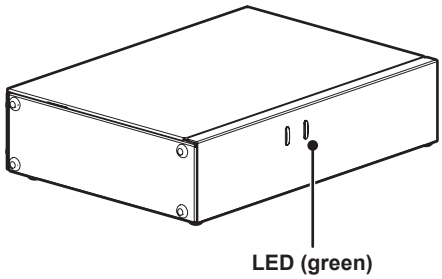

HINT

- When using the AC adapter, turn the power switch of the AeroDR Generator Interface Unit2 off, and confirm that the LED (green) goes off.

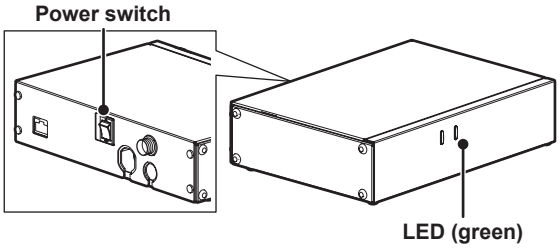

Generator Interface Unit 3

1 Turn off the power switch of the Power Source Device, and confirm that the LED (blue) is off.

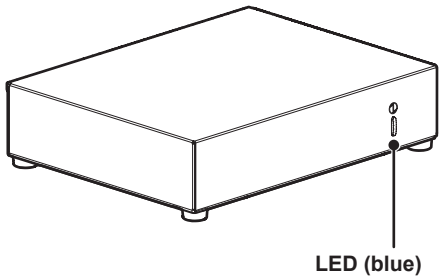

HINT

- When using the GIU3 AC Adapter, disconnect the power cable from the wall outlet and confirm that the LED (blue) is off.

AeroDR Battery Charger

1 Disconnect the power cable from the wall outlet, and confirm that the LED (green) is off.

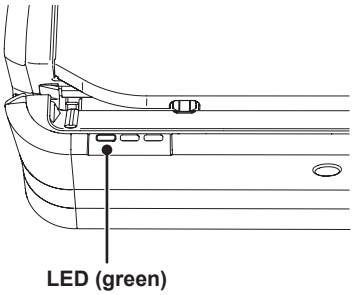

AeroDR Battery Charger2

1 Turn off the power switch, and confirm that the LED (green) is off.

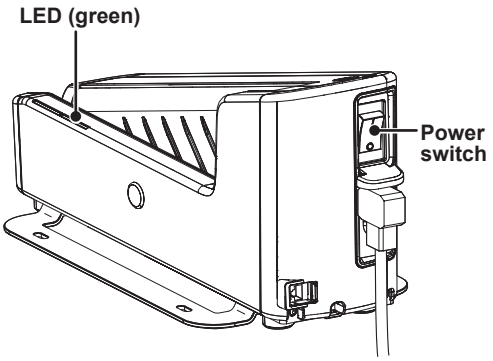

AeroDR Access Point

1 Turn off the power switch of the Power Source Device, and confirm that the LED (umber) is off.

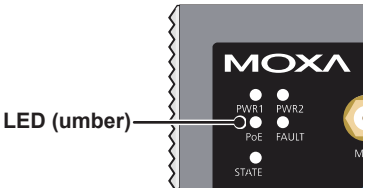

3.2 Operation of DR Detector

3.2.1 Exposure with basic connection or Aero Sync connection

Exposure under the basic connection example

IMPORTANT

- The DR Detector is precision equipment, and therefore impact or vibration during radiography or image transfer may affect the image quality. Be careful when handling the DR Detector during and just after radiography.

1 Perform examination registration with the image processing controller.

2 Check that this device is ready to expose images, and then prepare for the exposure.

3 Push the exposure switch of the X-ray device to perform the exposure.

- When the exposure is completed, images are stored in the DR Detector and will then be converted to digital data and sent to the image processing controller sequentially.

4 Check that the exposed image is displayed on the image processing controller.

HINT

- If the DR Detector remains unused for a long time (time can be set) it transitions to the sleep mode.
- When the image processing controller is ready to expose, it recovers from the sleep mode.

3.2.2 Exposure under the S-SRM connection example

IMPORTANT

- The DR Detector is precision equipment, and therefore impact or vibration during radiography or image transfer may affect the image quality. Be careful when handling the DR Detector during and just after radiography.

1 Perform examination registration with the image processing controller.

2 Check that this device is ready to expose images, and then prepare for the exposure.

3 Push the S-SRM's hand switch to the first stage.

- The exposure preparation signal is sent to the X-ray device.

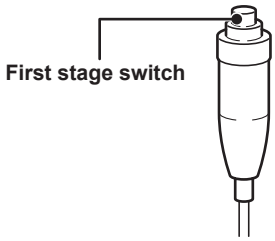

4 Push the S-SRM's hand switch up to the second level to perform exposure.

- Exposure is performed from the X-ray device to produce X-ray images.
- When the exposure is completed, images are stored in the DR Detector and will then be converted to digital data and sent to the image processing controller sequentially.

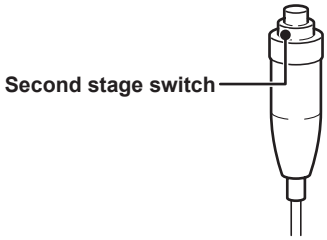

5 Check that the exposed image is displayed on the image processing controller.

HINT

- If the DR Detector remains unused for a long time (time can be set) it transitions to the sleep mode.
- When the image processing controller is ready to expose, it recovers from the sleep mode.

3.2.3 Exposure using Aero Storage

IMPORTANT

- The following DR Detector models can be used for Aero Storage exposure: AeroDR 3 Detector.

Starting Aero Storage Mode

IMPORTANT

- When DR Detector is in the following conditions, Aero Storage mode cannot start:
  - —It is connected to the AeroDR Battery Charger, AeroDR Battery Charger2, and a wired cable.
  - —DR Detector battery level has dropped to less than 10 % level.
- Selection SW cannot be operated while Aero Storage mode is active.
- When 100 Aero Storage images are saved, the Aero Storage mode starts, but it turns to the sleep state, and exposure using Aero Storage cannot be performed.

1 Press and hold the mode LED for three seconds.

2 Ensure that the mode LED (blue) blinks slowly, the information LED indicating the number of saved images is on, and the status LED (blue) is on.

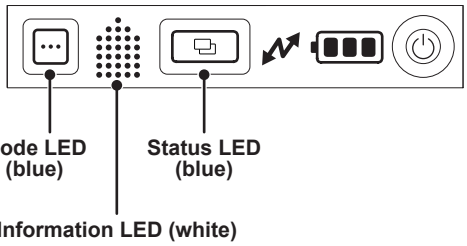

Exiting Aero Storage Mode

IMPORTANT

- You can also exit Aero Storage mode by pressing and holding the mode LED for three seconds.

1 Insert DR Detector into the AeroDR Battery Charger and AeroDR Battery Charger2, or connect it to a wired cable.

2 Aero Storage mode exits, and DR Detector is connected to the image processing controller.

HINT

- Aero Storage mode automatically exits in the following conditions:
  - —DR Detector battery level drops to less than 3 % level.
  - —DR Detector detects an error.

Exposure

IMPORTANT

- If you do not plan to expose immediately, exit Aero Storage mode.
- In Aero Storage, the maximum exposure time is set to 1.8 seconds and the resolution is set to the default (200μm). Please contact Konica Minolta technical representatives for more information about how to change the settings.
- The DR Detector is precision equipment, and therefore impact or vibration during radiography or image transfer may affect the image quality. Be careful when handling the DR Detector during and just after radiography.
- The number of saved images displayed in the information LED is counted when the orange status LED blinks fast after the X-ray exposure.
- The number of saved images displayed after an exposure is the patient's image number.
- Images exposed using Aero Storage do not have patient information. It is recommended, therefore, to keep record so that you can associate the patient exposed with the number of saved images displayed on DR Detector.
- When the number of saved images in Aero Storage reaches 100, it turns to the sleep state, and exposure using Aero Storage cannot be performed.
- While importing the images, do not disconnect DR Detector from AeroDR Battery Charger, AeroDR Battery Charger2, or the wired cable.
- When the image import process finishes, the number of saved image in DR Detector becomes zero.

1 Start Aero Storage mode.

2 Check that this device is ready to expose images, and then prepare for the exposure.

3 Push the exposure switch of the X-ray device to perform the exposure.

- After exposure, images are saved to DR Detector, and the information LED indicates the number of saved images.

4 Exit Aero Storage mode.

- Insert DR Detector into the AeroDR Battery Charger or AeroDR Battery Charger2, or connect it to a wired cable.
- Aero Storage mode exits, and DR Detector is connected to the image processing controller.

5 Import the images using the image processing controller.

Aero Indicator

Exposure with Aero Indicator is performed with the following procedure.

IMPORTANT

- Do not give diagnoses using the images displayed in Aero Indicator.
- Images displayed in Aero Indicator are for positioning check, and the display differs from the image displayed in the image processing controller.
- When performing exposure using Aero Indicator, align the orientation of the triangular mark of the DR Detector with the orientation of the grid bar as shown in the following figure.

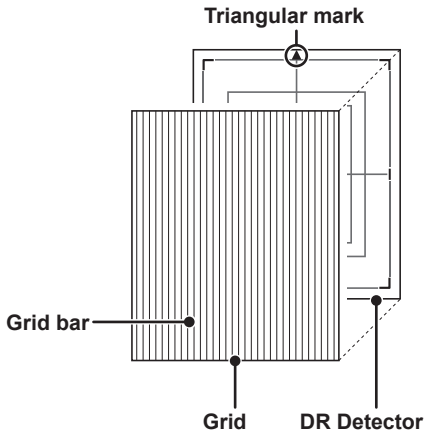

- If the orientation of the grid bar tilts 90° from the orientation of the triangular mark of the DR Detector at exposure, the image display unevenness may occur on Aero Indicator.
- The image unevenness on Aero Indicator due to the orientation of the grid bar will be removed upon image processing when the image is imported to the image processing controller.

1 Start the Aero Storage mode of the DR Detector.

2 Start Aero Indicator of the DR Detector to be accessed from a mobile device, and log in to Aero Indicator.

3 Check the connected DR Detector, and tap [OK].

4 Ensure that the status of Aero Indicator is ready for exposure, and perform an exposure operation.

5 Check the preview image displayed in Aero Indicator. The image is displayed during the reception process, and the preview image is displayed.

6 Exit the Aero Storage mode of the DR Detector as well as Aero Indicator on the mobile terminal.

7 Import the image using the image processing controller.

HINT

- If reconnect to the DR Detector that imported images to the image processing controller without exiting Aero Indicator, the following screen is displayed. Tap [Refresh] to refresh the imported image as well as exposure failure and division display displayed on the mobile terminal.

Aero Indicator screen display

IMPORTANT

- Aero Indicator can only be used in the Aero Storage mode of the DR Detector.
- If there are multiple DR Detectors that use Aero Indicator, exit the Aero Storage mode on (or turn off the power of) all DR Detector except the one connecting to the mobile device.
- Exiting the Aero Storage mode of the DR Detector disconnects the connection.
- Because the connection to the DR Detector can be disconnected, do not turn the mobile terminal to the sleep state while Aero Indicator is in use.
- When the number of saved images in Aero Storage reaches 100, it turns to the sleep state, and exposure using Aero Storage cannot be performed.

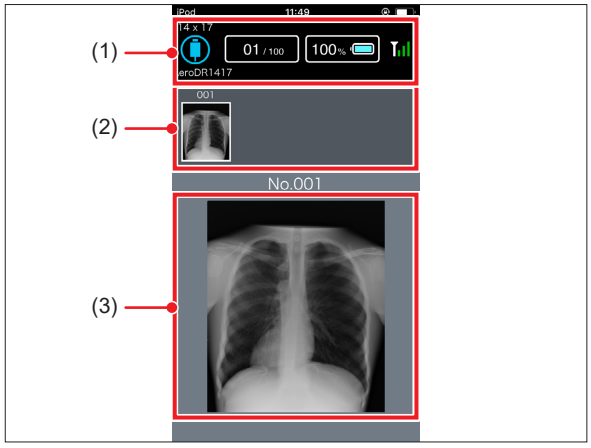

Number	Name	Function	
(1)	Status	14 x 17 AeroDR1417	Ready for exposure
		14 x 17 AeroDR1417	DR Detector is in preparation.
			DR Detector is not connected.
	Number of saved images	Number of images saved to the DR Detector.	
	Battery level	Battery level of DR Detector.	
	Radio wave intensity	The intensity of the radio wave used for DR Detector connection.	
(2)	Thumbnail	List of images saved to the DR Detector.	
(3)	Preview image	The selected thumbnail is displayed as an enlarged image.	

HINT

- A mobile terminal equipped with an audio output function can be configured to beep when the status turns to READY and when the DR Detector detects the X-ray.

Exposure failure and division display functions of Aero Indicator

IMPORTANT

- The information of exposure failure or division display function cannot be imported to the image processing controller. Record it on a piece of paper before importing the images.

1 Tap on the preview display.

- The exposure failure function and division display function buttons are displayed.

2 Tap the exposure failure function button [ ] or the division display function button [ ].

- Tap the exposure failure function button [ ] to insert an exposure failure indicator to the preview display and the corresponding thumbnail.

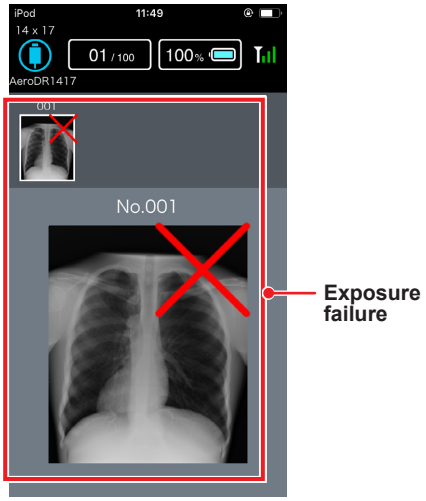

- Tap the division display function button [ ] to insert a divider at right of the thumbnail.

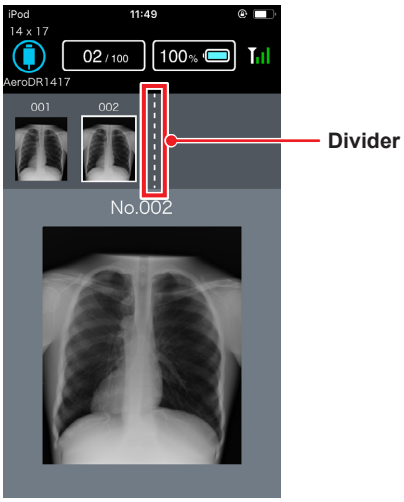

- When either button is Tapped, the exposure failure function and division display function buttons disappear.

HINT

- Repeat the same procedure to delete the exposure failure indicator or the divider.

3.2.4 Serial exposure

IMPORTANT

- DR Detectors capable of serial exposure are: AeroDR 3 1417HD, AeroDR 3 1717HD, AeroDR 3 1417HD2, and AeroDR 3 1717HD2.
- I/F cables capable of serial exposure are: I/F Cable4 1.5mD, I/F Cable4 8mD, and I/F Cable4 8mU.
- Intelligent Grid cannot be used.
- Please use an X-ray generator and a wall stand/table dedicated for serial exposure.
- Because the serial exposure images are exposed with low dosage, it is not guaranteed that these images have the same image quality as the images exposed in other method than serial exposure.
- The DR Detector is precision equipment, and therefore impact or vibration during radiography or image transfer may affect the image quality. Be careful when handling the DR Detector during and immediately after the exposure.

1 Perform examination registration with the image processing controller.

2 Check that this device is ready to expose images, and then prepare for the exposure.

3 Push the exposure switch of the X-ray device to perform the exposure.

- By pressing and holding the exposure switch, serial exposure is performed. Also, by releasing the exposure switch, X-ray exposure finishes to exit serial exposure.
- When the exposure is completed, images are stored in the DR Detector and will then be converted to digital data and sent to the image processing controller sequentially.

4 Check that the exposed image is displayed on the image processing controller.

3.2.5 DR Detector orientation

Change the orientation of the DR Detector according to the exposure body part.
Expose with the triangular mark upward when exposing in portrait, and with the triangular mark to the side when exposing in landscape.

When exposing in portrait

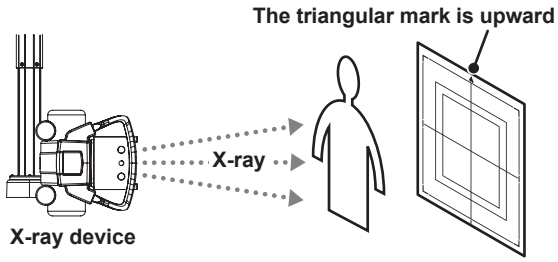

When exposing in landscape

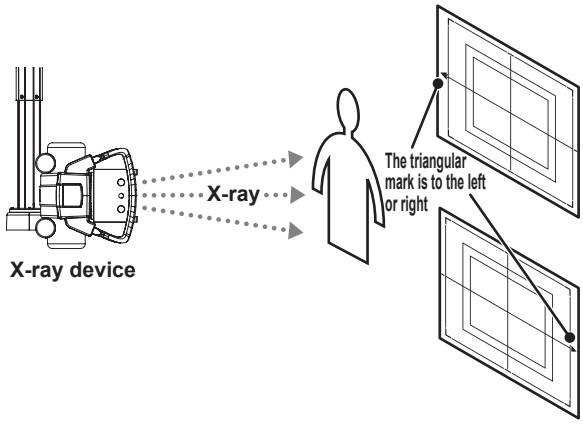

HINT

- The blue label or blue lines also helps you identify the top-bottom orientation of the DR Detector.
- To carry out exposures in portrait orientation, turn the DR Detector so that its blue label or blue lines comes to the bottom position.

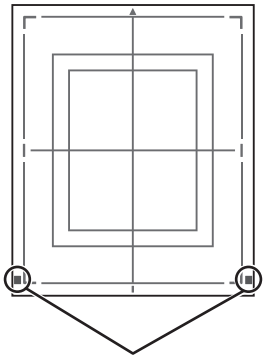

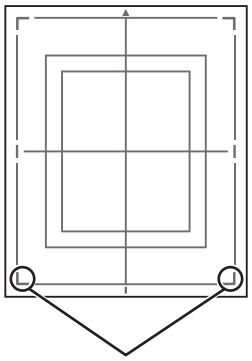

- The side with the triangular mark is the exposure surface.
- When exposing the chest, abdomen, and pelvis in landscape, because the functions to determine the orientation of the body and to rotate the image automatically is configured, set the orientation of DR Detector as follows:
  - For wired connection with an I/F cable or wireless connection, ensure that the orientation of the triangular mark to the left when performing an exposure.
  - For wired connection with an AeroDR UF cable, perform an exposure in a direction to which the AeroDR UF cable can be connected.
- Radiography is not allowed on a subject in a horizon-tal position when an AeroDR 1717HQ, AeroDR 3 1717HD, and AeroDR 3 1717HD2 are used.

3.2.6 Precautions for exposure

Exposure area

IMPORTANT

- If the irradiation field is larger than DR Detector when you take an image, an artifact may occur due to the X-ray back-scatter effect. Adjust the irradiation filed to fit within the imaging range.

- The size lines of DR Detector indicate the exposure size.
- During exposure, place the exposure body part within the white lines on the four corners.

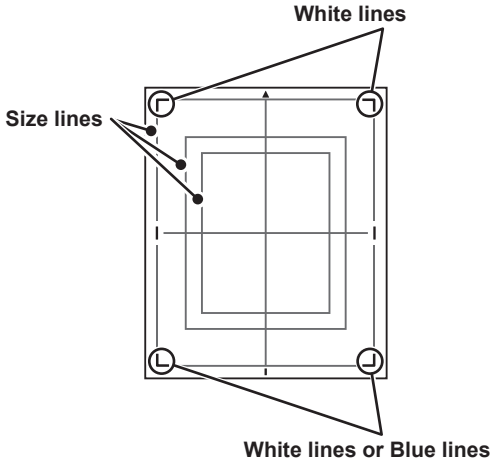

HINT

- As for AeroDR 3 Detector, the line in the bottom is blue.

Wired connection

- When performing exposure with a wired connection, fasten the wired cable horizontally to the wired connection connector of the DR Detector. If connected at an angle, transverse (noise) sometimes gets into acquired images after exposure.

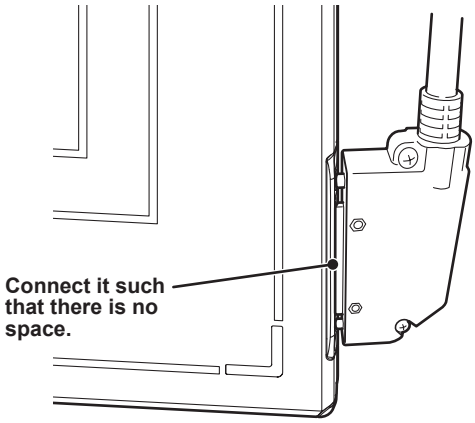

Wireless communications environment

- With a wireless environment, it is possible that errors such as no wireless connection, wireless communication terminates, and lengthened exposure cycle time might occur.

HINT

- Problems with a wireless communications environment can occur in the following conditions:
  - —Installed location of the access point is not good.
  - —When inserted in the wall stand, table, or stretcher, the opening in the wall stand or table is too small and there is no passage for the radio waves.
  - —The radio waves are not emitted due to metal parts close to the antenna, which changes the antenna characteristics.
  - —For exposures where the body touches the DR Detector directly, the radio waves may not be emitted if the body completely covers both antennas or either of the antennas.
  - —Other devices use the same radio band, and cause interference.
  - —When the 2.4 GHz band is used, using high frequency therapy equipment will cause interference.
  - —When the DFS band is used, the access point changes channels if weather radar or air control radar is detected. This may cause communication to be temporarily disconnected.

Exposure switch

- If the exposure switch remains held down, it may result in an afterimage becoming visible. Once exposure is finished, release the exposure switch immediately.

Grid

IMPORTANT

- For an AeroDR 1417S without the "1417S" identification, use a grid with a grid density of 34 lp/cm and an angle error of 0.5° or less.

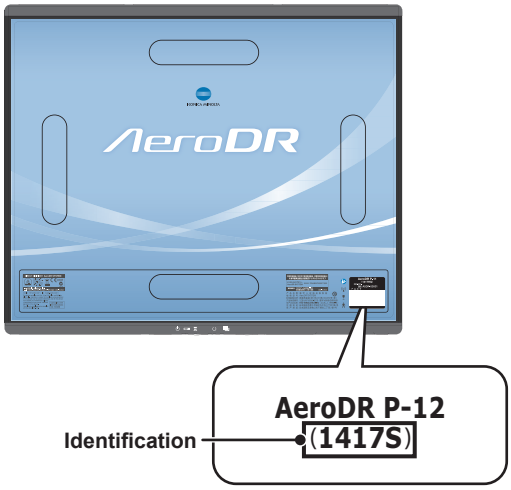

- A capped grid is recommended when laying the grid over the DR Detector on the table top or for exposure with the X-ray device.
- Do not use a grid of which the antenna is covered with metal, as the quality of wireless communication may be significantly reduced.

- Use the following grid when exposing.

DR Detector	Grid density	Grid ratio	Convergence distance	Angle error
AeroDR Detector, AeroDR 2 Detector	34 lp/cm 40 lp/cm	Variety	Variety	5.0° or less
AeroDR 3 Detector	34 lp/cm 40 lp/cm 60 lp/cm	Variety	Variety	5.0° or less

- With some individual differences, fiber grids may lack uniformity in thickness when compared to the aluminum grids. Due to this effect, there may be disturbance in the grid interval cycle, causing insufficient grid removal process.

High-dose exposure

- When high-dose exposures are performed continuously, afterimages of the last exposure will occasionally be visible. The affect of afterimages in this device can be resolved by leaving longer intervals between exposures, so make the intervals between exposures longer than usual when performing high-dose exposure.
- During high-dose exposure, continual use of a lead or other marker at the same position can cause burning in of the afterimage. Therefore, avoid using it in the same position. Also, if image burn-in is visible, run calibration.

Exposure time for basic connection/ S-SRM connection

IMPORTANT

- You cannot select 4.0, 6.7 and 10.3 as the maximum exposure time for the following DR Detectors.

DR Detector	Serial Number	
	First four digits	Number
AeroDR 1417HQ	A5DP	50197 or less
AeroDR 1417S	A50D	51000 or less
AeroDR 1717HQ	A6C3	51000 or less
AeroDR 1012HQ	A5TE	51000 or less

- If you increase the maximum exposure time in AeroDR Detector and AeroDR 2 Detector, the DR Detector may take longer to exit sleep mode.
- When the maximum exposure time of the AeroDR 3 Detector is set at 10.3, the interval between exposures should be 2 minutes or longer. The following exposures also require 2 minutes intervals.

- The maximum exposure time is as follows.

DR Detector	maximum exposure time
AeroDR Detector, AeroDR 2 Detector	0.7, 1.7, 3.2, 4.0, 6.7, 10.3 seconds
AeroDR 3 Detector	0.7, 1.7, 4.0, 10.3 seconds

- The exposure time for actual exposures should not exceed the maximum exposure time you have set. Otherwise, exposure may fail or correct images may not be able to be obtained.

HINT

- Use the image processing controller to set the maximum exposure time. In some cases, the maximum exposure time is fixed according to the X-ray device. For details, contact Konica Minolta technical representatives.
- When using ImagePilot as the image processing controller, it is not possible to change the maximum exposure time.

Exposure time for Aero Sync mode of the AeroDR 1417HQ, AeroDR 1717HQ, AeroDR 1012HQ, AeroDR 2 Detector

IMPORTANT

- If the conditions are not met, X-rays may not be detected or streaks may occur in the image.
- Because the minimum exposure time for AeroDR 1417HQ, AeroDR 1717HQ, and AeroDR 1012HQ varies depending on the X-ray device to be used, follow the survey results at the time of installation.
- The minimum exposure time applies to the time when X-ray is exposed onto the center of the DR Detector. If X-ray cannot be exposed onto the center, contact Konica Minolta technical representatives.

- Set the maximum exposure time to 0.8 seconds or less.
- Set the minimum exposure time as follows:

DR Detector	Minimum exposure time
AeroDR 1417HQ, AeroDR 1717HQ, AeroDR 1012HQ	2.1 milliseconds
AeroDR 2 Detector	1 millisecond

HINT

- When using ImagePilot as the image processing controller, it is not possible to change the maximum exposure time.