12.2. System Check Plots

This appendix contains the following system validation distribution scans.

Scan Reference Number	Title
001	System Performance Check 750MHz Body 12 08 15
002	System Performance Check 900MHz Body 23 07 15
003	System Performance Check 900MHz Body 10 08 15
004	System Performance Check 900MHz Body 21 09 15
005	System Performance Check 1900MHz Body 23 07 15
006	System Performance Check 1900MHz Body 13 08 15
007	System Performance Check 1900MHz Body 20 08 15
008	System Performance Check 2450MHz Body 23 07 15
009	System Performance Check 2450MHz Body 17 08 15
010	System Performance Check 5250MHz Body 04 08 15
011	System Performance Check 5600MHz Body 04 08 15
012	System Performance Check 5750MHz Body 04 08 15

This report shall not be reproduced except in full, without the written approval of UL VS Ltd.

001: System Performance Check 750MHz Body 12 08 15
Date: 12/8/2015
DUT: Dipole 750 MHz; Type: D750V3; Serial: D750V3 - SN:1011

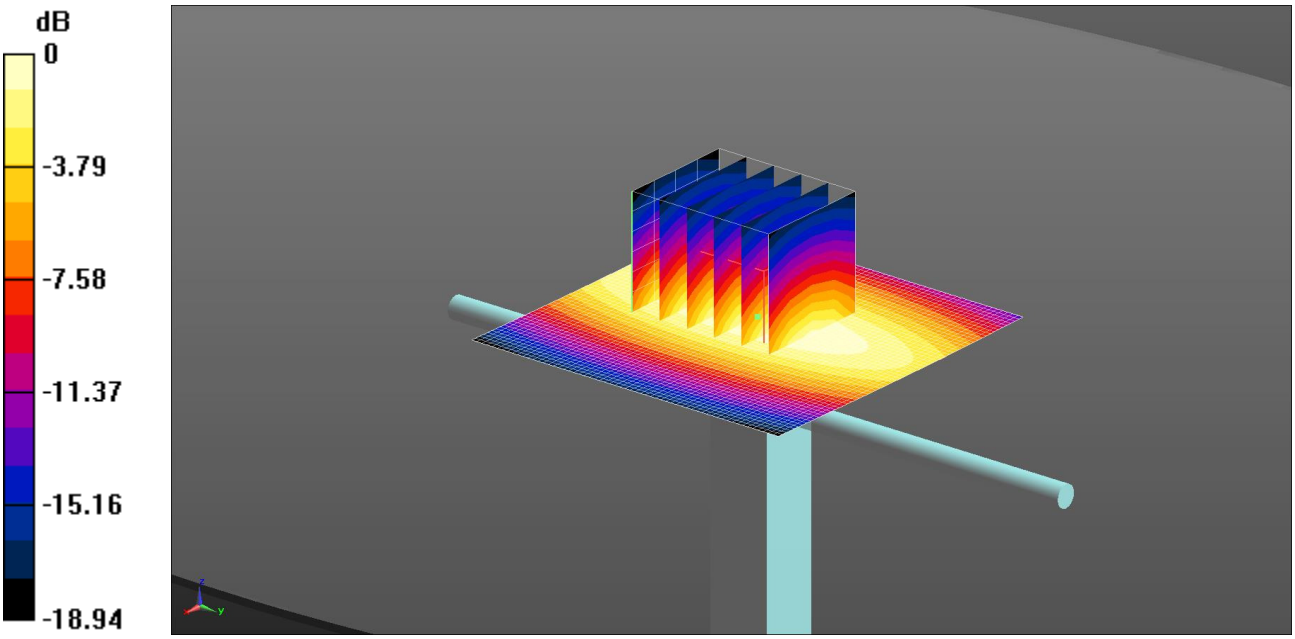

0 dB = 2.24 W/kg = 3.51 dBW/kg

Communication System: UID 0, CW (0); Frequency: 750 MHz;Duty Cycle: 1:1
Medium: 750 MHz MSL Medium parameters used: f = 750 MHz; σ = 0.971 S/m; ε_r = 54.516; ρ = 1000 kg/m^3
Phantom section: Flat Section
DASY4 Configuration:
- Probe: ET3DV6 - SN1586; ConvF(6.36, 6.36, 6.36); Calibrated: 22/5/2015;
- Sensor-Surface: 4mm (Mechanical Surface Detection)
- Electronics: DAE4 Sn1438; Calibrated: 29/4/2015
- Phantom: ELI v5.0 (30deg probe tilt); Type: QDOVA002AA; Serial: TP:xxxx
- ; SEMCAD X Version 14.6.10 (7331)

SAR/d=15mm, Pin=250 mW, dist=10.0mm (ET-Probe) 2 2 2/Area Scan (61x61x1): Interpolated grid: dx=1.500 mm, dy=1.500 mm
Maximum value of SAR (interpolated) = 2.24 W/kg
SAR/d=15mm, Pin=250 mW, dist=10.0mm (ET-Probe) 2 2 2/Zoom Scan (5x5x7) (5x6x7)/Cube 0: Measurement grid: dx=8mm, dy=8mm, dz=5mm
Reference Value = 49.96 V/m; Power Drift = 0.00 dB
Peak SAR (extrapolated) = 2.92 W/kg
SAR(1 g) = 2.09 W/kg; SAR(10 g) = 1.41 W/kg
Maximum value of SAR (measured) = 2.26 W/kg

This report shall not be reproduced except in full, without the written approval of UL VS Ltd.

002: System Performance Check 900MHz Body 23 07 15
Date: 23/7/2015
DUT: Dipole 900 MHz D900V2; Type: D900V2; Serial: D900V2 - SN:035

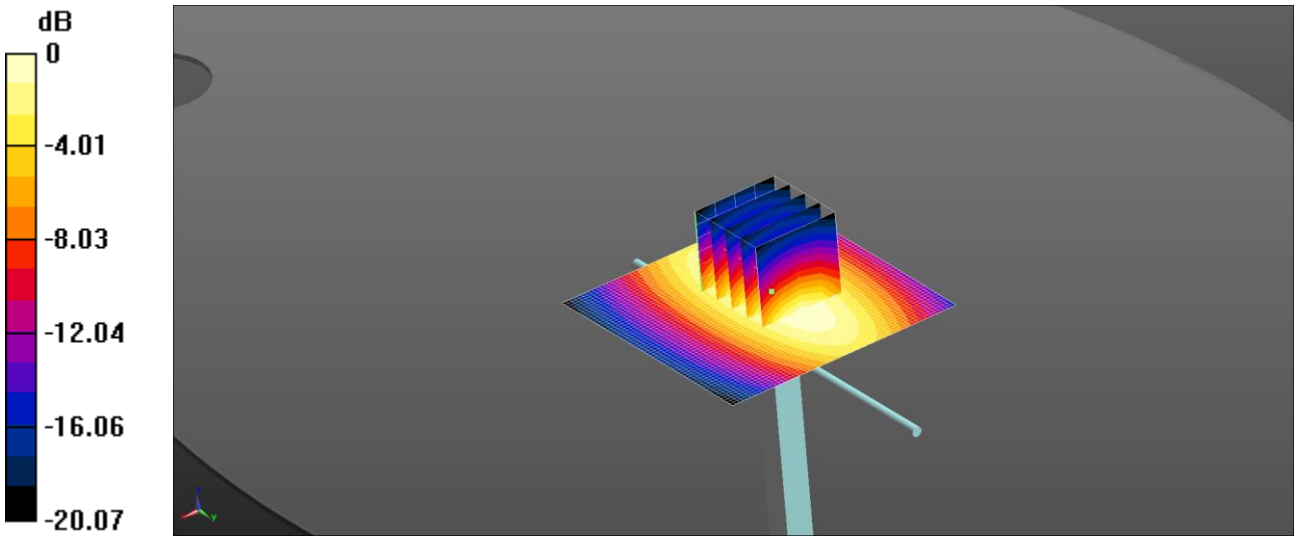

0 dB = 2.78 W/kg = 4.45 dBW/kg

Communication System: UID 0, CW; Frequency: 900 MHz;Duty Cycle: 1:1
Medium: 900 MHz MSL Medium parameters used: f = 900 MHz; σ = 1.057 S/m; ε_r = 54.172; ρ = 1000 kg/m^3
Phantom section: Flat Section
DASY4 Configuration:
- Probe: ET3DV6 - SN1586; ConvF(6.06, 6.06, 6.06); Calibrated: 22/5/2015;
- Sensor-Surface: 4mm (Mechanical Surface Detection)
- Electronics: DAE4 Sn1438; Calibrated: 29/4/2015
- Phantom: ELI v5.0 (30deg probe tilt); Type: QDOVA002AA; Serial: TP:xxxx
- ; SEMCAD X Version 14.6.10 (7331)

SAR/d=15mm, Pin=250 mW, dist=10.0mm (ET-Probe)/Area Scan (61x61x1): Interpolated grid: dx=1.500 mm, dy=1.500 mm
Maximum value of SAR (interpolated) = 2.78 W/kg

SAR/d=15mm, Pin=250 mW, dist=10.0mm (ET-Probe)/Zoom Scan (5x5x7) (5x5x7)/Cube 0: Measurement grid: dx=8mm, dy=8mm, dz=5mm
Reference Value = 53.78 V/m; Power Drift = -0.00 dB
Peak SAR (extrapolated) = 3.54 W/kg
SAR(1 g) = 2.57 W/kg; SAR(10 g) = 1.7 W/kg
Maximum value of SAR (measured) = 2.78 W/kg

This report shall not be reproduced except in full, without the written approval of UL VS Ltd.

003: System Performance Check 900MHz Body 10 08 15
Date: 10/8/2015
DUT: Dipole 900 MHz D900V2; Type: D900V2; Serial: D900V2 - SN:035

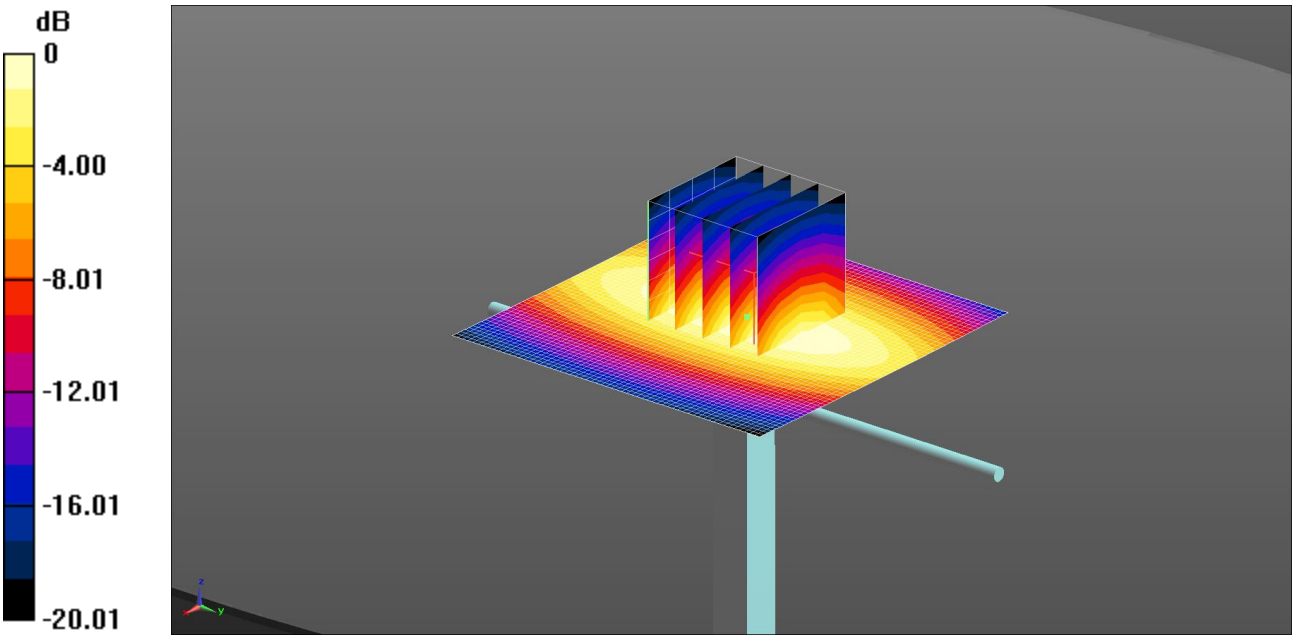

0 dB = 2.92 W/kg = 4.65 dBW/kg

Communication System: UID 0, CW; Frequency: 900 MHz;Duty Cycle: 1:1
Medium: 900 MHz MSL Medium parameters used: f = 900 MHz; σ = 1.068 S/m; ε_r = 53.779; ρ = 1000 kg/m^3
Phantom section: Flat Section
DASY4 Configuration:
- Probe: ET3DV6 - SN1586; ConvF(6.06, 6.06, 6.06); Calibrated: 22/5/2015;
- Sensor-Surface: 4mm (Mechanical Surface Detection)
- Electronics: DAE4 Sn1438; Calibrated: 29/4/2015
- Phantom: ELI v5.0 (30deg probe tilt); Type: QDOVA002AA; Serial: TP:xxxx
- ; SEMCAD X Version 14.6.10 (7331)

SAR/d=15mm, Pin=250 mW, dist=10.0mm (ET-Probe) 2 2/Area Scan (61x61x1): Interpolated grid: dx=1.500 mm, dy=1.500 mm
Maximum value of SAR (interpolated) = 2.92 W/kg
SAR/d=15mm, Pin=250 mW, dist=10.0mm (ET-Probe) 2 2/Zoom Scan (5x5x7) (5x5x7)/Cube 0: Measurement grid: dx=8mm, dy=8mm, dz=5mm
Reference Value = 54.75 V/m; Power Drift = -0.01 dB
Peak SAR (extrapolated) = 3.72 W/kg
SAR(1 g) = 2.7 W/kg; SAR(10 g) = 1.79 W/kg
Maximum value of SAR (measured) = 2.93 W/kg

This report shall not be reproduced except in full, without the written approval of UL VS Ltd.

004: System Performance Check 900MHz Body 21 09 15
Date: 21/9/2015
DUT: Dipole 900 MHz D900V2; Type: D900V2; Serial: D900V2 - SN:035

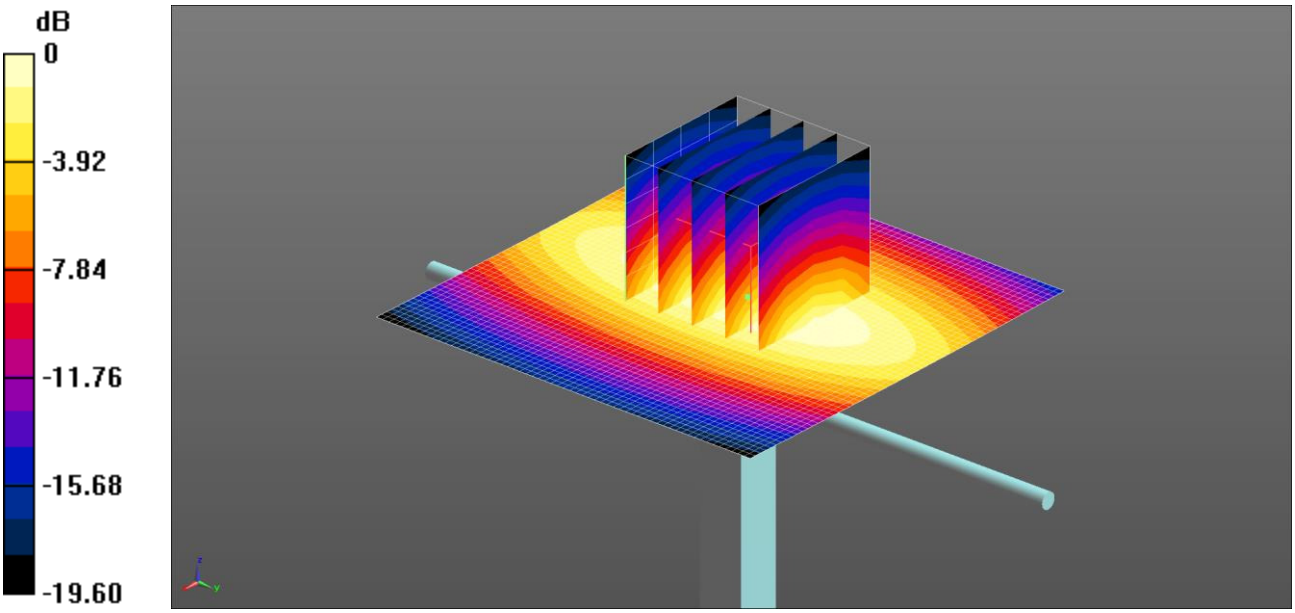

0 dB = 2.92 W/kg = 4.66 dBW/kg

Communication System: UID 0, CW; Frequency: 900 MHz;Duty Cycle: 1:1
Medium: 900 MHz MSL Medium parameters used: f = 900 MHz; σ = 1.036 S/m; ε_r = 51.753; ρ = 1000 kg/m^3
Phantom section: Flat Section
DASY4 Configuration:
- Probe: ET3DV6 - SN1586; ConvF(6.06, 6.06, 6.06); Calibrated: 22/5/2015;
- Sensor-Surface: 4mm (Mechanical Surface Detection)
- Electronics: DAE4 Sn1438; Calibrated: 29/4/2015
- Phantom: ELI v5.0 (30deg probe tilt); Type: QDOVA002AA; Serial: TP:xxxx
- ; SEMCAD X Version 14.6.10 (7331)

SAR/d=15mm, Pin=250 mW, dist=10.0mm (ET-Probe)/Area Scan (61x61x1): Interpolated grid: dx=1.500 mm, dy=1.500 mm
Maximum value of SAR (interpolated) = 2.92 W/kg
SAR/d=15mm, Pin=250 mW, dist=10.0mm (ET-Probe)/Zoom Scan (5x5x7) (5x5x7)/Cube 0: Measurement grid: dx=8mm, dy=8mm, dz=5mm
Reference Value = 55.60 V/m; Power Drift = 0.03 dB
Peak SAR (extrapolated) = 3.71 W/kg
SAR(1 g) = 2.7 W/kg; SAR(10 g) = 1.78 W/kg
Maximum value of SAR (measured) = 2.93 W/kg

This report shall not be reproduced except in full, without the written approval of UL VS Ltd.

005: System Performance Check 1900MHz Body 23 07 15
Date: 23/7/2015
DUT: Dipole 1900 MHz; Type: D1900V2; Serial: SN540

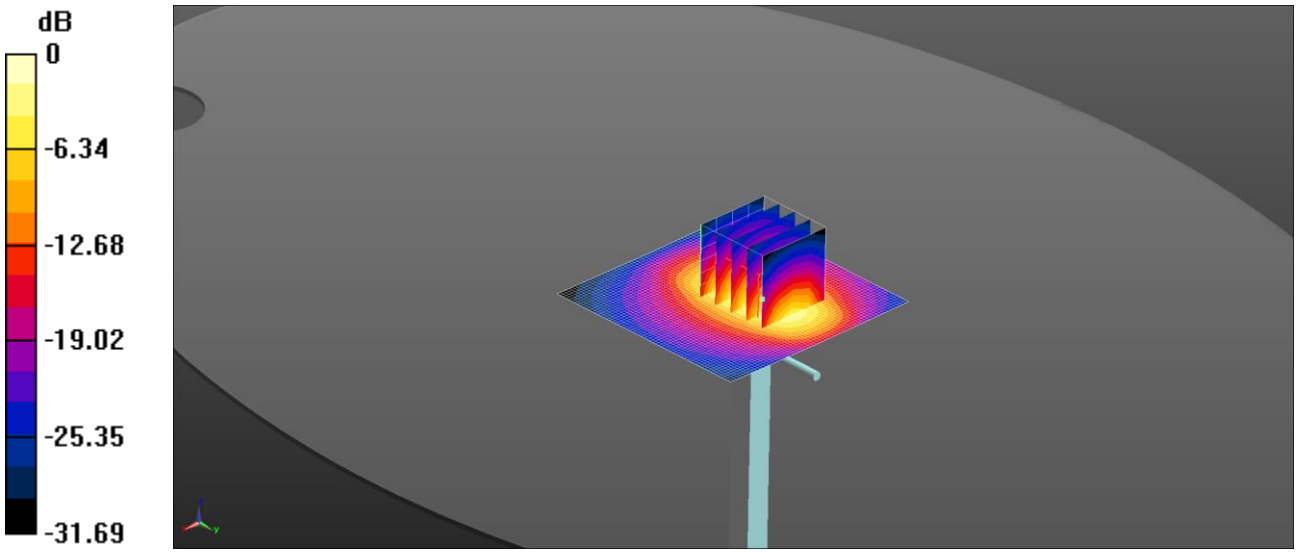

0 dB = 13.4 W/kg = 11.28 dBW/kg

Communication System: UID 0, CW; Frequency: 1900 MHz;Duty Cycle: 1:1
Medium: 1900 MHz MSL Medium parameters used: f = 1900 MHz; σ = 1.558 S/m; ε_r = 52.701; ρ = 1000 kg/m^3
Phantom section: Flat Section
DASY4 Configuration:
- Probe: EX3DV4 - SN3994; ConvF(7.63, 7.63, 7.63); Calibrated: 17/3/2015;
- Sensor-Surface: 4mm (Mechanical Surface Detection)
- Electronics: DAE3 Sn432; Calibrated: 20/8/2014
- Phantom: ELI v5.0; Type: QDOVA002AA; Serial: TP:xxxx
- ; SEMCAD X Version 14.6.10 (7331)

Configuration/d=10mm, Pin=250mW 2/Area Scan (61x61x1): Interpolated grid: dx=1.500 mm, dy=1.500 mm
Maximum value of SAR (interpolated) = 13.4 W/kg

Configuration/d=10mm, Pin=250mW 2/Zoom Scan (5x5x7) (5x5x7)/Cube 0: Measurement grid: dx=8mm, dy=8mm, dz=5mm
Reference Value = 83.29 V/m; Power Drift = 0.03 dB
Peak SAR (extrapolated) = 18.3 W/kg
SAR(1 g) = 10.1 W/kg; SAR(10 g) = 5.29 W/kg
Maximum value of SAR (measured) = 11.3 W/kg

This report shall not be reproduced except in full, without the written approval of UL VS Ltd.

006: System Performance Check 1900MHz Body 13 08 15
Date: 13/08/2015
DUT: Dipole 1900 MHz; SN540; Type: D1900V2; Serial: SN540

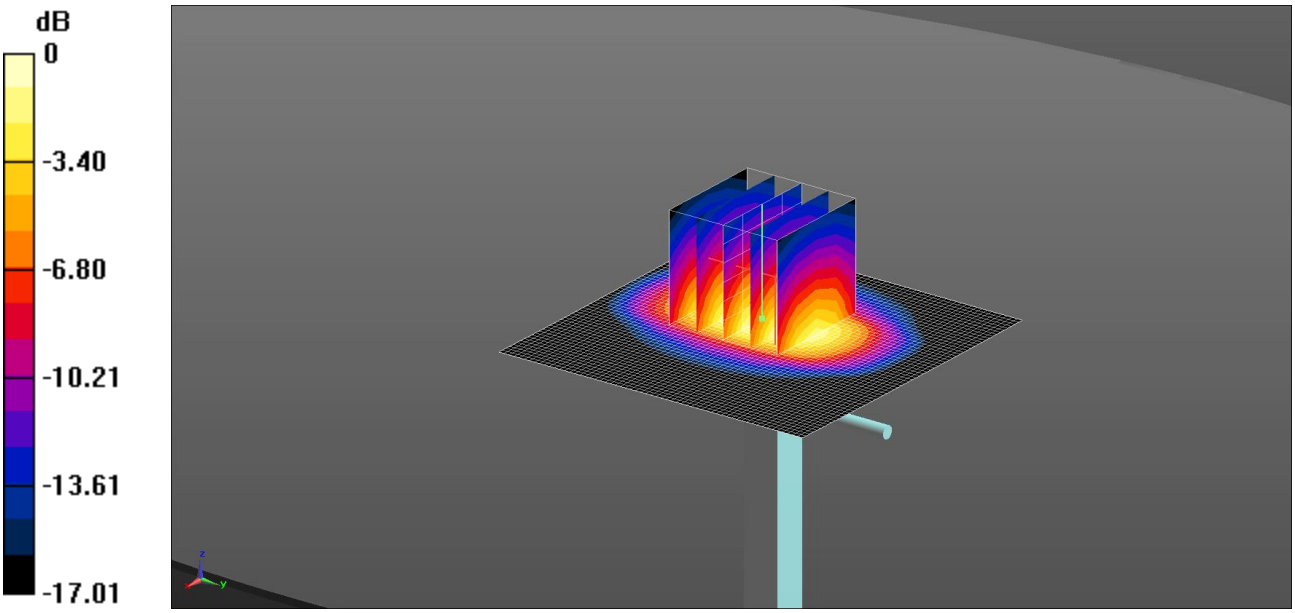

0 dB = 11.8 W/kg = 10.72 dBW/kg

Communication System: UID 0 - n/a, CW (0); Frequency: 1900 MHz;Duty Cycle: 1:1
Medium: 1900MHz MSL Medium parameters used: f = 1900 MHz; σ = 1.458 S/m; ε_r = 50.918; ρ = 1000 kg/m^3
Phantom section: Flat Section
DASY4 Configuration:
- Probe: EX3DV4 - SN3995; ConvF(7.72, 7.72, 7.72); Calibrated: 28/04/2015;
- Sensor-Surface: 4mm (Mechanical Surface Detection)
- Electronics: DAE3 Sn450; Calibrated: 16/09/2014
- Phantom: ELI v5.0; Type: QDOVA002AA; Serial: TP:xxxx
- ; SEMCAD X Version 14.6.9 (7117)

SAR/d=10mm, Pin=250 mW, dist=10.0mm (ET-Probe) 2 2/Area Scan (61x61x1): Interpolated grid: dx=1.500 mm, dy=1.500 mm
Maximum value of SAR (interpolated) = 12.5 W/kg
SAR/d=10mm, Pin=250 mW, dist=10.0mm (ET-Probe) 2 2/Zoom Scan (5x5x7) (5x5x7)/Cube 0: Measurement grid: dx=8mm, dy=8mm, dz=5mm
Reference Value = 84.774 V/m; Power Drift = 0.05 dB
Peak SAR (extrapolated) = 18.8 W/kg
SAR(1 g) = 10.5 W/kg; SAR(10 g) = 5.53 W/kg
Maximum value of SAR (measured) = 11.8 W/kg

This report shall not be reproduced except in full, without the written approval of UL VS Ltd.

007: System Performance Check 1900MHz Body 20 08 15
Date: 20/08/2015
DUT: Dipole 1900 MHz; Type: D1900V2; Serial: SN540

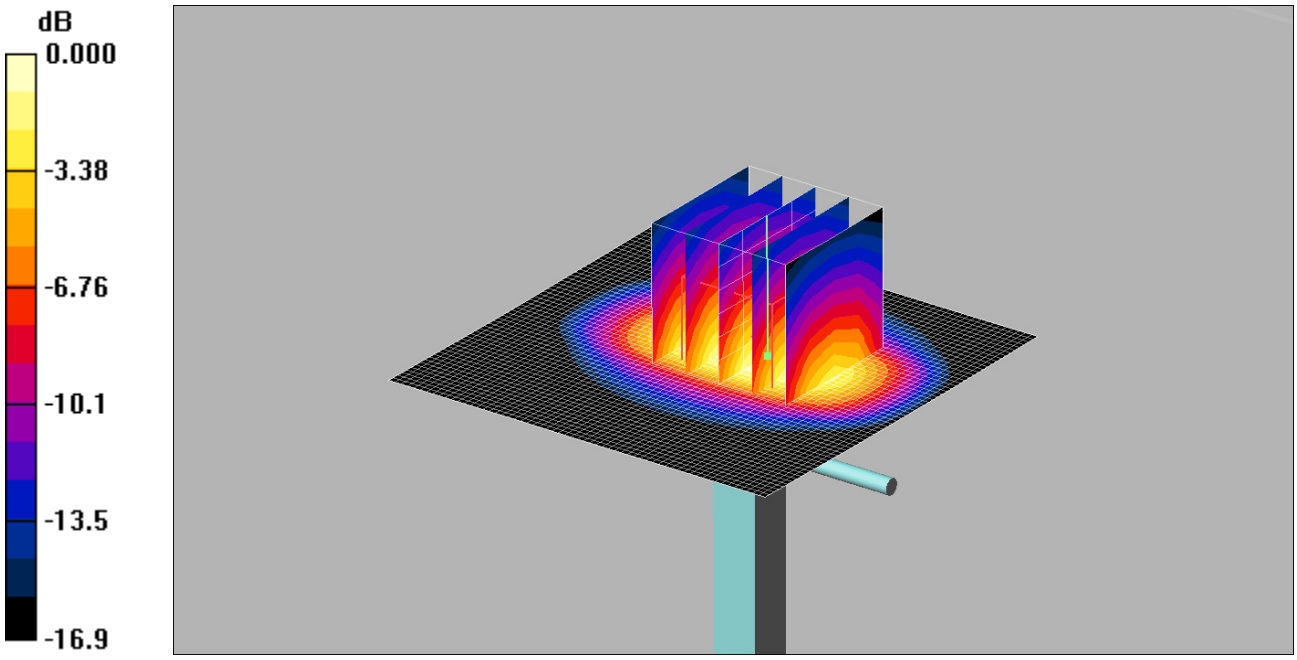

0 dB = 11.1mW/g

Communication System: UID 0, CW; Frequency: 1900 MHz;Duty Cycle: 1:1
Medium: 1900 MHz MSL Medium parameters used: f = 1900 MHz; σ = 1.478 S/m; εr = 53.549; ρ = 1000 kg/m3
Phantom section: Flat Section
DASY4 Configuration:
- Probe: EX3DV4 - SN3994; ConvF(7.63, 7.63, 7.63); Calibrated: 17/03/15;
- Sensor-Surface: 4mm (Mechanical Surface Detection)
- Electronics: DAE3 Sn394; Calibrated: 26/05/15
- Phantom: ELI v5.0; Type: QDOVA002AA; Serial: TP:xxxx
- ; SEMCAD X Version 14.6.10 (7331)

Configuration/d=10mm, Pin=250mW/Area Scan (61x61x1): Interpolated grid: dx=1.500 mm, dy=1.500 mm
Maximum value of SAR (interpolated) = 12.8 W/kg

Configuration/d=10mm, Pin=250mW/Zoom Scan (5x5x7) (5x5x7)/Cube 0: Measurement grid: dx=8mm, dy=8mm, dz=5mm
Reference Value = 86.35 V/m; Power Drift = -0.06 dB
Peak SAR (extrapolated) = 17.5 W/kg
SAR(1 g) = 9.91 W/kg; SAR(10 g) = 5.29 W/kg
Maximum value of SAR (measured) = 11.0 W/kg

This report shall not be reproduced except in full, without the written approval of UL VS Ltd.

008: System Performance Check 2450MHz Body 23 07 15
Date: 23/07/2015
DUT: Dipole 2450 MHz; SN725; Type: D2450V2; Serial: D2450V2 - SN:725

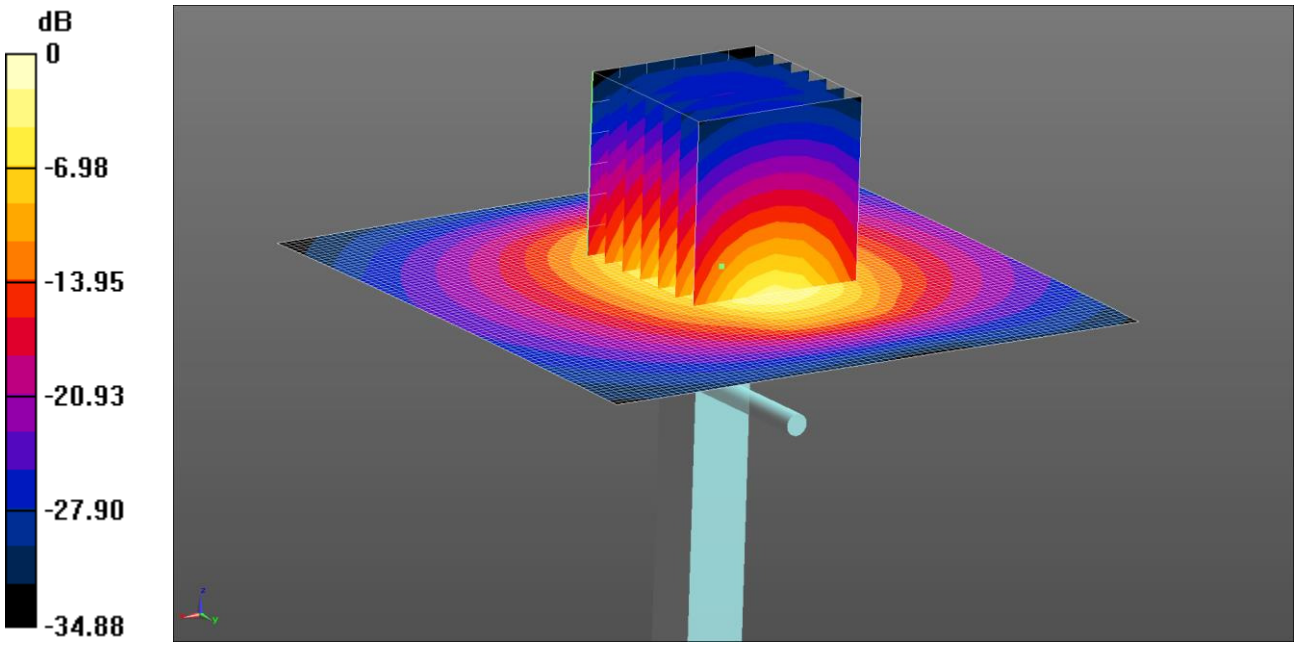

0 dB = 18.2 W/kg = 12.59 dBW/kg

Communication System: UID 0, CW (0); Frequency: 2450 MHz;Duty Cycle: 1:1
Medium: 2450MHz MSL Medium parameters used: f = 2450 MHz; σ = 1.956 S/m; ε_r = 50.972; ρ = 1000 kg/m^3
Phantom section: Flat Section
DASY4 Configuration:
- Probe: EX3DV4 - SN3995; ConvF(7.4, 7.4, 7.4); Calibrated: 28/04/2015;
- Sensor-Surface: 2mm (Mechanical Surface Detection)
- Electronics: DAE3 Sn450; Calibrated: 16/09/2014
- Phantom: ELI v5.0; Type: QDOVA002AA; Serial: TP:xxxx
- ; SEMCAD X Version 14.6.10 (7164)

Configuration/d=10mm, Pin=250mW/Area Scan (81x81x1): Interpolated grid: dx=1.200 mm, dy=1.200 mm
Maximum value of SAR (interpolated) = 18.2 W/kg

Configuration/d=10mm, Pin=250mW/Zoom Scan (7x7x7) (7x7x7)/Cube 0: Measurement grid: dx=5mm, dy=5mm, dz=5mm
Reference Value = 77.426 V/m; Power Drift = 0.02 dB
Peak SAR (extrapolated) = 24.9 W/kg
SAR(1 g) = 12 W/kg; SAR(10 g) = 5.58 W/kg
Maximum value of SAR (measured) = 18.3 W/kg

This report shall not be reproduced except in full, without the written approval of UL VS Ltd.

009: System Performance Check 2450MHz Body 17 08 15
Date: 17/08/2015
DUT: Dipole 2450 MHz; SN725; Type: D2450V2; Serial: D2450V2 - SN:725

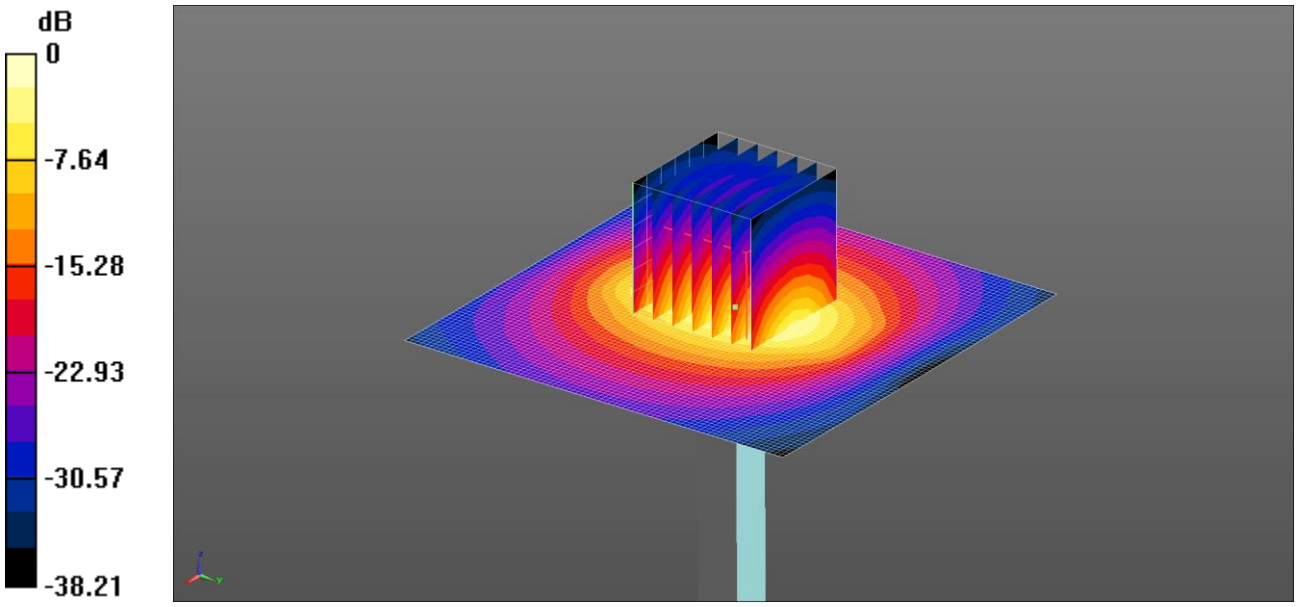

0 dB = 18.5 W/kg = 12.67 dBW/kg

Communication System: UID 0, CW (0); Frequency: 2450 MHz;Duty Cycle: 1:1
Medium: 2450 MHz MSL Medium parameters used: f = 2450 MHz; σ = 2.03 S/m; ε_r = 50.471; ρ = 1000 kg/m^3
Phantom section: Flat Section
DASY4 Configuration:
- Probe: EX3DV4 - SN3995; ConvF(7.4, 7.4, 7.4); Calibrated: 28/04/2015;
- Sensor-Surface: 2mm (Mechanical Surface Detection)
- Electronics: DAE3 Sn450; Calibrated: 16/09/2014
- Phantom: ELI v5.0; Type: QDOVA002AA; Serial: TP:xxxx
- ; SEMCAD X Version 14.6.10 (7164)

Configuration/d=10mm, Pin=250mW/Area Scan (81x81x1): Interpolated grid: dx=1.200 mm, dy=1.200 mm
Maximum value of SAR (interpolated) = 18.5 W/kg
Configuration/d=10mm, Pin=250mW/Zoom Scan (7x7x7) (7x7x7)/Cube 0: Measurement grid: dx=5mm, dy=5mm, dz=5mm
Reference Value = 73.464 V/m; Power Drift = 0.23 dB
Peak SAR (extrapolated) = 25.3 W/kg
SAR(1 g) = 12.1 W/kg; SAR(10 g) = 5.56 W/kg
Maximum value of SAR (measured) = 18.6 W/kg

This report shall not be reproduced except in full, without the written approval of UL VS Ltd.

010: System Performance Check 5250MHz Body 04 08 15
Date: 04/08/15
DUT: 5GHz Dipole; Type: D5GHzV2; Serial: SN 1016

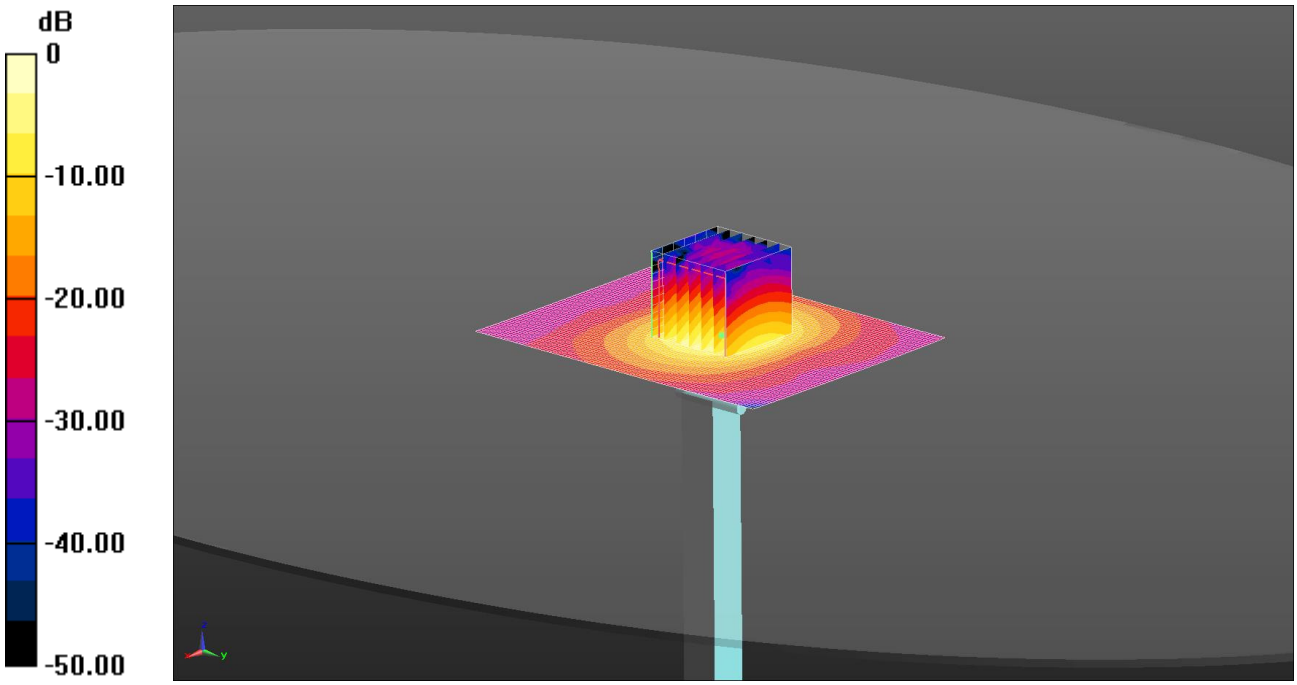

0 dB = 15.6 W/kg = 11.93 dBW/kg

Communication System: UID 0, CW (0); Frequency: 5250 MHz;Duty Cycle: 1:1
Medium: 5200/5500/5800 MHz MSL Medium parameters used: f = 5250 MHz; σ = 5.365 S/m; ε_r = 47.626; ρ = 1000 kg/m^3
Phantom section: Flat Section
DASY4 Configuration:
- Probe: EX3DV4 - SN3814; ConvF(4.38, 4.38, 4.38); Calibrated: 18/09/14;
- Sensor-Surface: 2mm (Mechanical Surface Detection)
- Electronics: DAE4 Sn1435; Calibrated: 20/02/15
- Phantom: ELI v5.0 (30deg probe tilt); Type: QDOVA002AA; Serial: TP:xxxx
- ; SEMCAD X Version 14.6.10 (7331)

Configuration/d=10mm, Pin=100mW 2/Area Scan (71x91x1): Interpolated grid: dx=1.000 mm, dy=1.000 mm
Maximum value of SAR (interpolated) = 15.7 W/kg

Configuration/d=10mm, Pin=100mW 2/Zoom Scan (7x7x12) (7x7x12)/Cube 0: Measurement grid: dx=4mm, dy=4mm, dz=2mm
Reference Value = 38.89 V/m; Power Drift = 0.10 dB
Peak SAR (extrapolated) = 29.1 W/kg
SAR(1 g) = 7.43 W/kg; SAR(10 g) = 2.1 W/kg
Maximum value of SAR (measured) = 15.6 W/kg

This report shall not be reproduced except in full, without the written approval of UL VS Ltd.

011: System Performance Check 5600MHz Body 04 08 15
Date: 04/08/15
DUT: 5GHz Dipole; Type: D5GHzV2; Serial: SN 1016

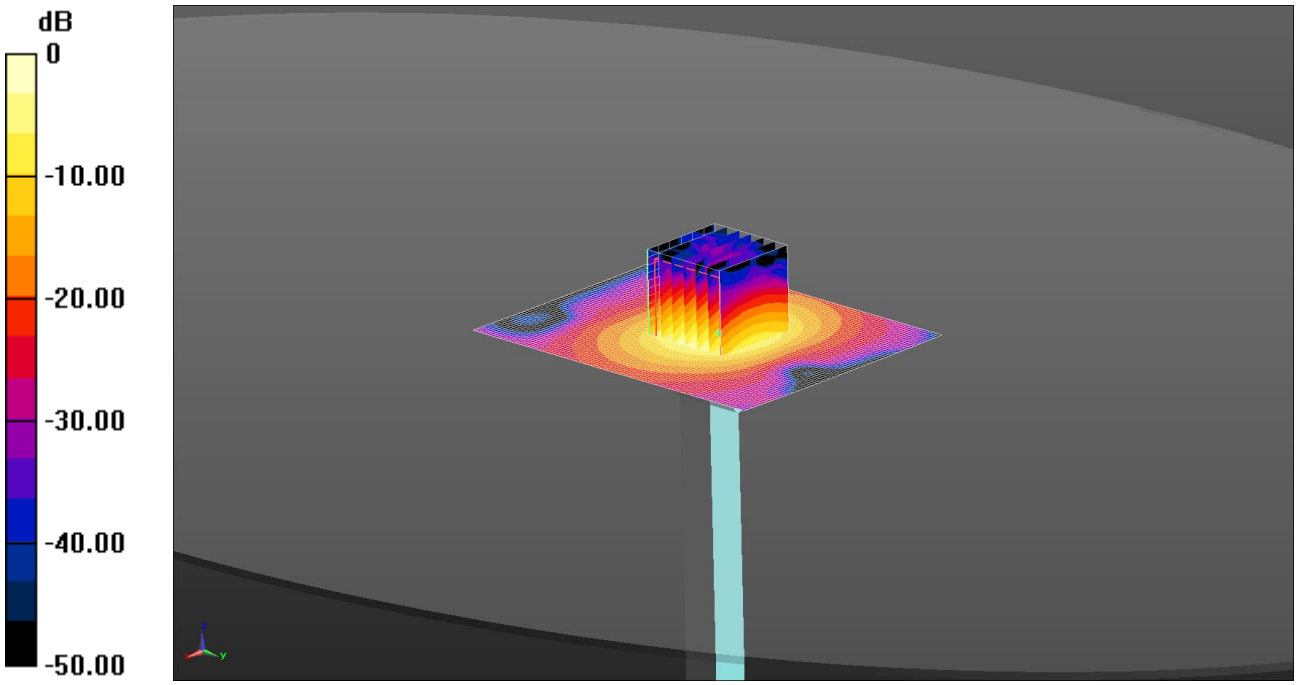

0 dB = 16.6 W/kg = 12.20 dBW/kg

Communication System: UID 0, CW (0); Frequency: 5600 MHz;Duty Cycle: 1:1
Medium: 5200/5500/5800 MHz MSL Medium parameters used: f = 5600 MHz; σ = 5.91 S/m; ε_r = 46.746; ρ = 1000 kg/m^3
Phantom section: Flat Section
DASY4 Configuration:
- Probe: EX3DV4 - SN3814; ConvF(3.79, 3.79, 3.79); Calibrated: 18/09/14;
- Sensor-Surface: 2mm (Mechanical Surface Detection)
- Electronics: DAE4 Sn1435; Calibrated: 20/02/15
- Phantom: ELI v5.0 (30deg probe tilt); Type: QDOVA002AA; Serial: TP:xxxx
- ; SEMCAD X Version 14.6.10 (7331)

Configuration/d=10mm, Pin=100mW 2 2/Area Scan (71x91x1): Interpolated grid: dx=1.000 mm, dy=1.000 mm
Maximum value of SAR (interpolated) = 16.7 W/kg

Configuration/d=10mm, Pin=100mW 2 2/Zoom Scan (7x7x12) (7x7x12)/Cube 0: Measurement grid: dx=4mm, dy=4mm, dz=2mm
Reference Value = 37.48 V/m; Power Drift = 0.10 dB
Peak SAR (extrapolated) = 32.8 W/kg
SAR(1 g) = 7.82 W/kg; SAR(10 g) = 2.19 W/kg
Maximum value of SAR (measured) = 16.6 W/kg

This report shall not be reproduced except in full, without the written approval of UL VS Ltd.

012: System Performance Check 5750MHz Body 04 08 15
Date: 04/08/15
DUT: 5GHz Dipole; Type: D5GHzV2; Serial: SN 1016

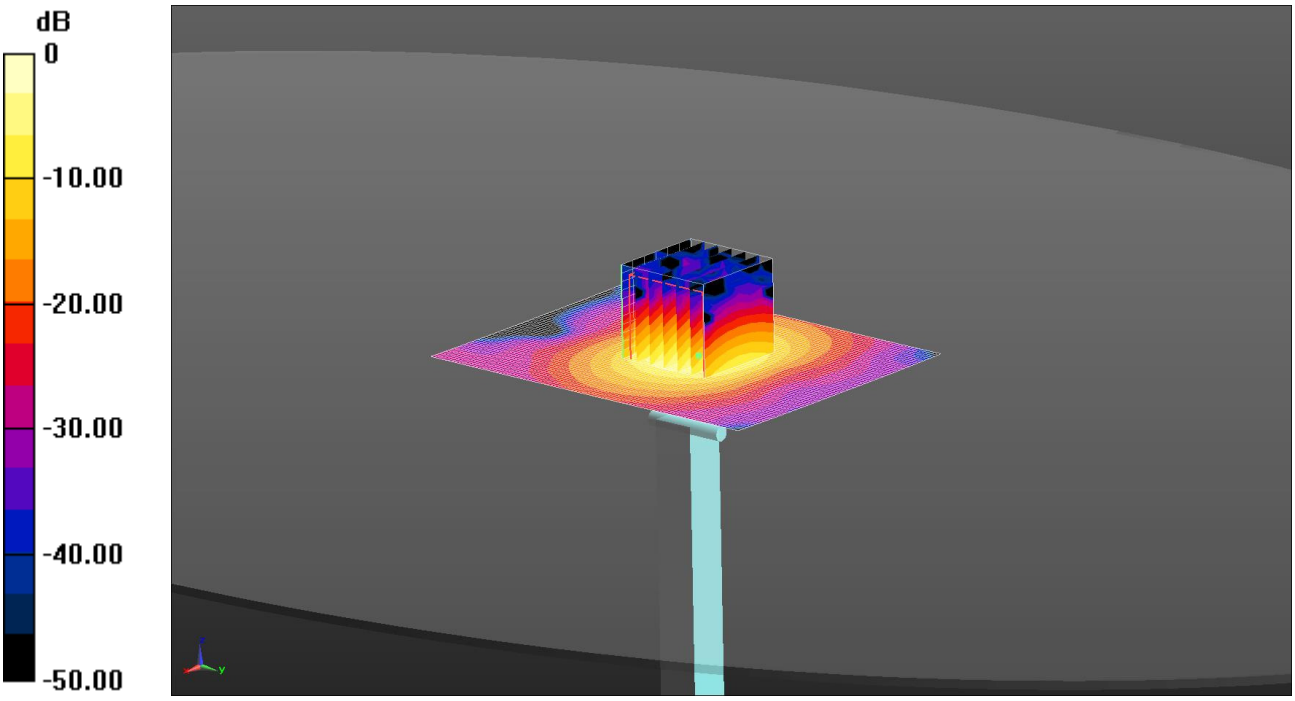

0 dB = 15.4 W/kg = 11.88 dBW/kg

Communication System: UID 0, CW (0); Frequency: 5750 MHz;Duty Cycle: 1:1
Medium: 5200/5500/5800 MHz MSL Medium parameters used: f = 5750 MHz; σ = 6.15 S/m; ε_r = 46.442; ρ = 1000 kg/m^3
Phantom section: Flat Section
DASY4 Configuration:
- Probe: EX3DV4 - SN3814; ConvF(4.06, 4.06, 4.06); Calibrated: 18/09/14;
- Sensor-Surface: 2mm (Mechanical Surface Detection)
- Electronics: DAE4 Sn1435; Calibrated: 20/02/15
- Phantom: ELI v5.0 (30deg probe tilt); Type: QDOVA002AA; Serial: TP:xxxx
- ; SEMCAD X Version 14.6.10 (7331)

Configuration/d=10mm, Pin=100mW 2/Area Scan (71x91x1): Interpolated grid: dx=1.000 mm, dy=1.000 mm
Maximum value of SAR (interpolated) = 16.0 W/kg

Configuration/d=10mm, Pin=100mW 2/Zoom Scan (7x7x12) (7x7x12)/Cube 0: Measurement grid: dx=4mm, dy=4mm, dz=2mm
Reference Value = 35.59 V/m; Power Drift = 0.04 dB
Peak SAR (extrapolated) = 30.6 W/kg
SAR(1 g) = 7.22 W/kg; SAR(10 g) = 2.03 W/kg
Maximum value of SAR (measured) = 15.4 W/kg

This report shall not be reproduced except in full, without the written approval of UL VS Ltd.

12.3. SAR Test Plots

This appendix contains the following system validation distribution scans.

Scan Reference Number	Title
001	Back of EUT Facing Phantom GSM 850 GPRS 2Tx CH190
002	Back of EUT Facing Phantom PCS 1900 GPRS 2Tx CH810
003	Back of EUT Facing Phantom WCDMA Band 2 CH9538
004	Back of EUT Facing Phantom WCDMA Band 5 CH4183
005	Back of EUT Facing Phantom CDMA BC0 RC3 SO32 CH384
006	Back of EUT Facing Phantom CDMA BC1 RC3 SO32 CH600
007	Back of EUT Facing Phantom CDMA BC10 RC3 SO32 CH580
008	Back of EUT Facing Phantom LTE Band 5 10MHz 50%RB Low CH20525
009	Back of EUT Facing Phantom LTE Band 13 10MHz 50%RB High CH23230
010	Back of EUT Facing Phantom LTE Band 25 1RB Low CH26365
011	Bottom of EUT Facing Phantom Wi-Fi 2.4 GHz 802.11b CH6
012	Bottom of EUT Facing Phantom Bluetooth CH39
013	Bottom of EUT Facing Phantom Wi-Fi 5.2 GHz 802 11n HT40 Ant 1 CH46
014	Bottom of EUT Facing Phantom Wi-Fi 5.3 GHz 802 11a Ant 1 CH52
015	Bottom of EUT Facing Phantom Wi-Fi 5.5 GHz 802 11a Ant 1 CH136
016	Bottom of EUT Facing Phantom Wi-Fi 5.8 GHz 802 11a Ant 1 CH149

This report shall not be reproduced except in full, without the written approval of UL VS Ltd.

001: Back of EUT Facing Phantom GSM 850 GPRS 2Tx CH190
Date: 24/7/2015
DUT: A1460; Sleeve: Infinea TAB; Sleeve contains FCC ID: YRWDATECSBT301

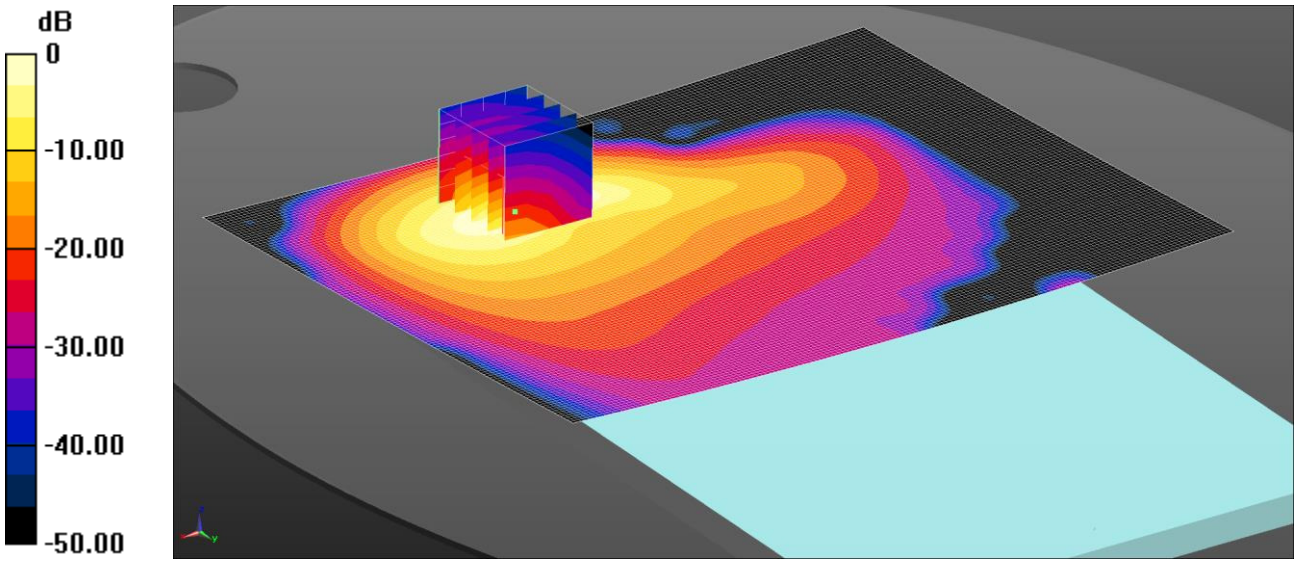

0 dB = 1.34 W/kg = 1.27 dBW/kg

Communication System: UID 0, GPRS 2Tx (0); Frequency: 836.6 MHz;Duty Cycle: 1:4.00037
Medium: 900 MHz MSL Medium parameters used (interpolated): f = 836.6 MHz; σ = 1.012 S/m; ε_r = 54.528; ρ = 1000 kg/m^3
Phantom section: Flat Section
DASY4 Configuration:
- Probe: ET3DV6 - SN1586; ConvF(6.22, 6.22, 6.22); Calibrated: 22/5/2015;
- Sensor-Surface: 4mm (Mechanical Surface Detection)
- Electronics: DAE4 Sn1438; Calibrated: 29/4/2015
- Phantom: ELI v5.0 (30deg probe tilt); Type: QDOVA002AA; Serial: TP:xxxx
- ; SEMCAD X Version 14.6.10 (7331)

MFi FCC/Back of EUT Facing Phantom 2/Area Scan (161x121x1): Interpolated grid: dx=1.500 mm, dy=1.500 mm

Maximum value of SAR (interpolated) = 1.34 W/kg

MFi FCC/Back of EUT Facing Phantom 2/Zoom Scan (5x5x7) (5x5x7)/Cube 0: Measurement grid: dx=8mm, dy=8mm, dz=5mm
Reference Value = 20.83 V/m; Power Drift = -0.18 dB
Peak SAR (extrapolated) = 2.21 W/kg
SAR(1 g) = 1.13 W/kg; SAR(10 g) = 0.578 W/kg

Maximum value of SAR (measured) = 1.34 W/kg

This report shall not be reproduced except in full, without the written approval of UL VS Ltd.

002: Back of EUT Facing Phantom PCS 1900 GPRS 2Tx CH810
Date: 14/08/2015
DUT: A1460; Sleeve: Infinea TAB; Sleeve contains FCC ID: YRWDATECSBT301

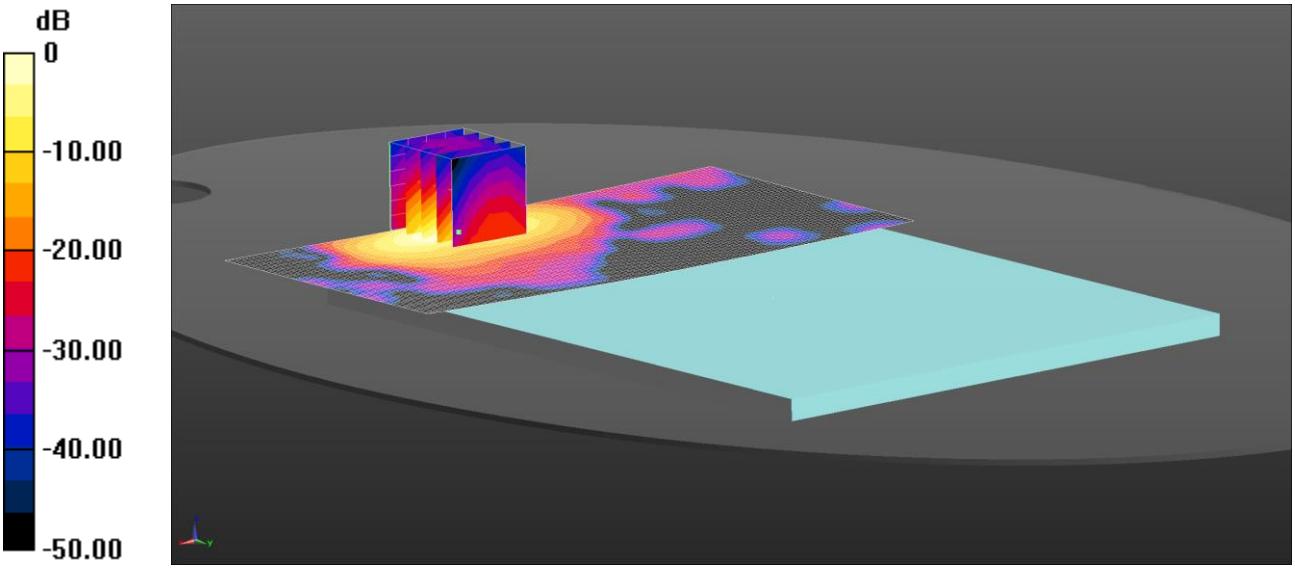

0 dB = 1.17 W/kg = 0.67 dBW/kg

Communication System: UID 0, GPRS 2Tx (0); Frequency: 1909.8 MHz;Duty Cycle: 1:4.00037
Medium: 1900MHz MSL Medium parameters used (interpolated): f = 1909.8 MHz; σ = 1.468 S/m; ε_r = 50.879; ρ = 1000 kg/m^3
Phantom section: Flat Section
DASY4 Configuration:
- Probe: EX3DV4 - SN3995; ConvF(7.72, 7.72, 7.72); Calibrated: 28/04/2015;
- Sensor-Surface: 4mm (Mechanical Surface Detection)
- Electronics: DAE3 Sn450; Calibrated: 16/09/2014
- Phantom: ELI v5.0; Type: QDOVA002AA; Serial: TP:xxxx
- ; SEMCAD X Version 14.6.10 (7164)

Configuration/Back of EUT Facing Phantom/Area Scan (141x71x1): Interpolated grid: dx=1.500 mm, dy=1.500 mm
Maximum value of SAR (interpolated) = 1.17 W/kg
Configuration/Back of EUT Facing Phantom/Zoom Scan (5x5x7) 2 (5x5x7)/Cube 0: Measurement grid: dx=8mm, dy=8mm, dz=5mm
Reference Value = 28.163 V/m; Power Drift = 0.00 dB
Peak SAR (extrapolated) = 1.93 W/kg
SAR(1 g) = 1 W/kg; SAR(10 g) = 0.477 W/kg
Maximum value of SAR (measured) = 1.18 W/kg

This report shall not be reproduced except in full, without the written approval of UL VS Ltd.

003: Back of EUT Facing Phantom WCDMA Band 2 CH9538
Date: 23/7/2015
DUT: A1460; Sleeve: Infinea TAB; Sleeve contains FCC ID: YRWDATECSBT301

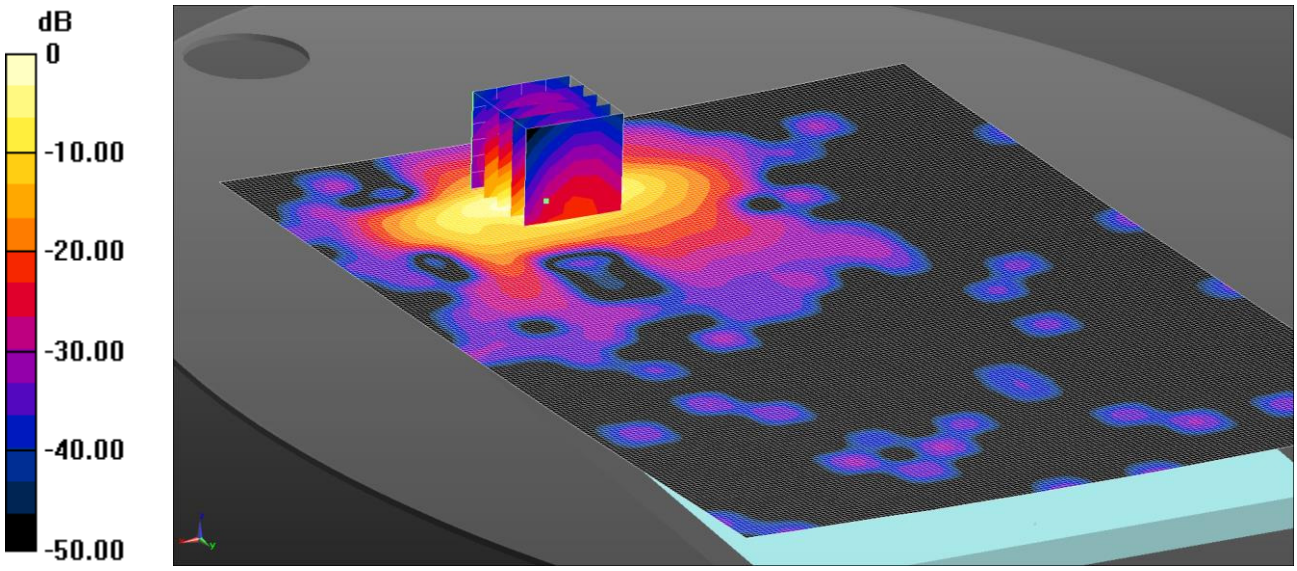

0 dB = 1.63 W/kg = 2.12 dBW/kg

Communication System: UID 0, UMTS-FDD II; Frequency: 1907.6 MHz;Duty Cycle: 1:1
Medium: 1900 MHz MSL Medium parameters used (interpolated): f = 1907.6 MHz; σ = 1.564 S/m; ε_r = 52.682; ρ = 1000 kg/m^3
Phantom section: Flat Section
DASY4 Configuration:
- Probe: EX3DV4 - SN3994; ConvF(7.63, 7.63, 7.63); Calibrated: 17/3/2015;
- Sensor-Surface: 2mm (Mechanical Surface Detection)
- Electronics: DAE3 Sn432; Calibrated: 20/8/2014
- Phantom: ELI v5.0; Type: QDOVA002AA; Serial: TP:xxxx
- ; SEMCAD X Version 14.6.10 (7331)

Configuration/(Angled) Back of EUT Facing Phantom/Area Scan (151x211x1): Interpolated grid: dx=1.500 mm, dy=1.500 mm

Maximum value of SAR (interpolated) = 1.63 W/kg

Configuration/(Angled) Back of EUT Facing Phantom/Zoom Scan (5x5x7) (5x5x7)/Cube 0: Measurement grid: dx=8mm, dy=8mm, dz=5mm
Reference Value = 4.035 V/m; Power Drift = -0.08 dB
Peak SAR (extrapolated) = 2.23 W/kg
SAR(1 g) = 1.14 W/kg; SAR(10 g) = 0.526 W/kg

Maximum value of SAR (measured) = 1.75 W/kg

This report shall not be reproduced except in full, without the written approval of UL VS Ltd.

004: Back of EUT Facing Phantom WCDMA Band 5 CH4183
Date: 24/9/2015
DUT: A1460; Sleeve: Infinea TAB; Sleeve contains FCC ID: YRWDATECSBT301

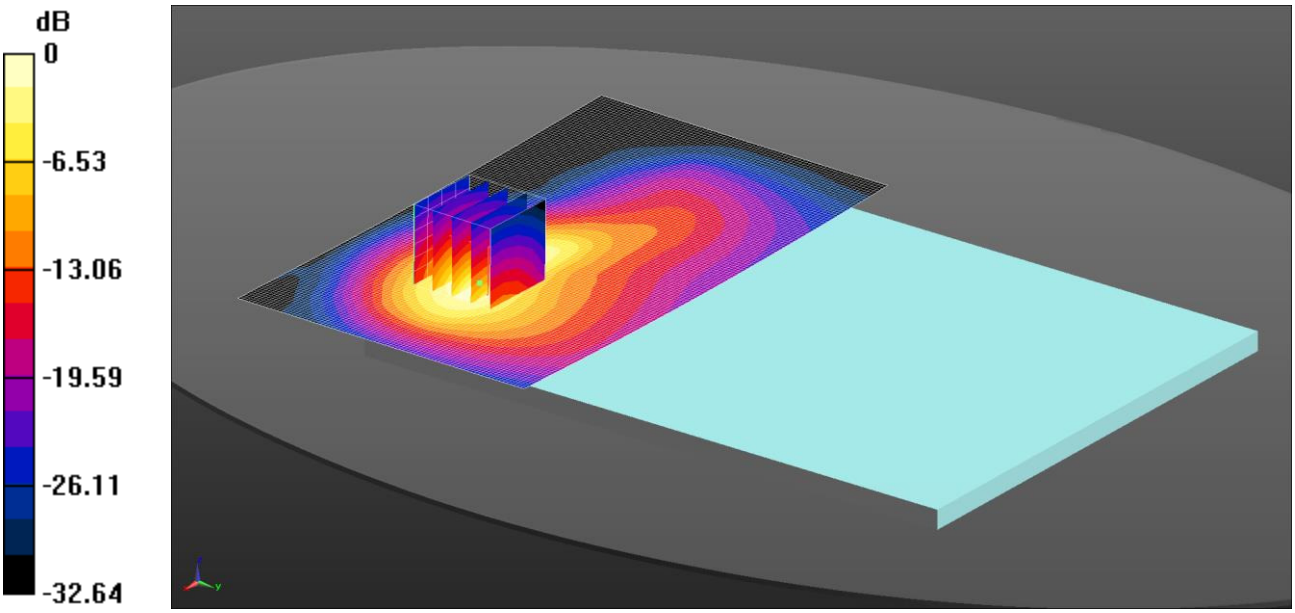

0 dB = 1.11 W/kg = 0.47 dBW/kg

Communication System: UID 0, UMTS FDD (0); Frequency: 836.6 MHz;Duty Cycle: 1:1
Medium: 900 MHz MSL Medium parameters used (interpolated): f = 836.6 MHz; σ = 0.995 S/m; ε_r = 52.033; ρ = 1000 kg/m^3
Phantom section: Flat Section
DASY4 Configuration:
- Probe: ET3DV6 - SN1586; ConvF(6.22, 6.22, 6.22); Calibrated: 22/5/2015;
- Sensor-Surface: 4mm (Mechanical Surface Detection)
- Electronics: DAE4 Sn1438; Calibrated: 29/4/2015
- Phantom: ELI v5.0 (30deg probe tilt); Type: QDOVA002AA; Serial: TP:xxxx
- ; SEMCAD X Version 14.6.10 (7331)

Configuration/Back of EUT Facing Phantom/Area Scan (141x81x1): Interpolated grid: dx=1.500 mm, dy=1.500 mm
Maximum value of SAR (interpolated) = 1.11 W/kg
Configuration/Back of EUT Facing Phantom/Zoom Scan (5x5x7) (5x5x7)/Cube 0: Measurement grid: dx=8mm, dy=8mm, dz=5mm
Reference Value = 34.32 V/m; Power Drift = 0.08 dB
Peak SAR (extrapolated) = 2.34 W/kg
SAR(1 g) = 1.14 W/kg; SAR(10 g) = 0.575 W/kg
Maximum value of SAR (measured) = 1.27 W/kg

This report shall not be reproduced except in full, without the written approval of UL VS Ltd.

005: Back of EUT Facing Phantom CDMA BC0 RC3 SO32 CH384
Date: 24/9/2015
DUT: A1460; Sleeve: Infinea TAB; Sleeve contains FCC ID: YRWDATECSBT301

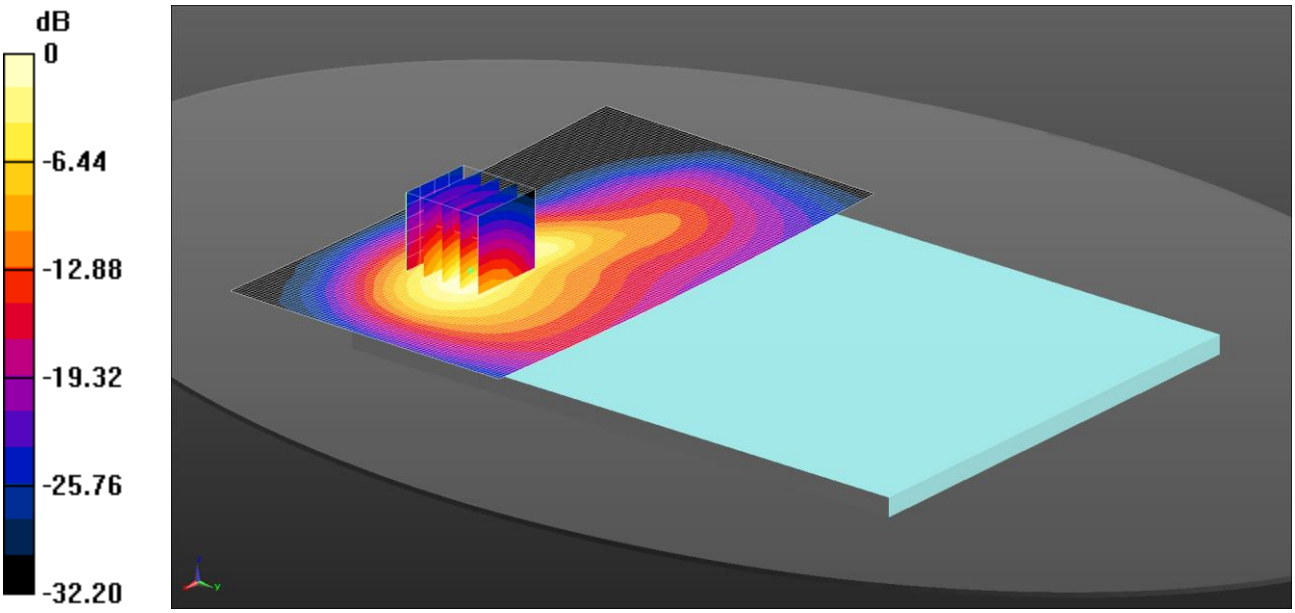

0 dB = 0.997 W/kg = -0.01 dBW/kg

Communication System: UID 0, CDMA2000 (0); Frequency: 836.52 MHz;Duty Cycle: 1:1
Medium: 900 MHz MSL Medium parameters used (interpolated): f = 836.52 MHz; σ = 0.995 S/m; ε_r = 52.033; ρ = 1000 kg/m^3
Phantom section: Flat Section
DASY4 Configuration:
- Probe: ET3DV6 - SN1586; ConvF(6.22, 6.22, 6.22); Calibrated: 22/5/2015;
- Sensor-Surface: 4mm (Mechanical Surface Detection)
- Electronics: DAE4 Sn1438; Calibrated: 29/4/2015
- Phantom: ELI v5.0 (30deg probe tilt); Type: QDOVA002AA; Serial: TP:xxxx
- ; SEMCAD X Version 14.6.10 (7331)

Configuration/Back of EUT Facing Phantom 3 2/Area Scan (141x81x1): Interpolated grid: dx=1.500 mm, dy=1.500 mm
Maximum value of SAR (interpolated) = 0.997 W/kg
Configuration/Back of EUT Facing Phantom 3 2/Zoom Scan (5x5x7) (5x5x7)/Cube 0: Measurement grid: dx=8mm, dy=8mm, dz=5mm
Reference Value = 36.17 V/m; Power Drift = -0.04 dB
Peak SAR (extrapolated) = 2.14 W/kg
SAR(1 g) = 1.07 W/kg; SAR(10 g) = 0.549 W/kg
Maximum value of SAR (measured) = 1.21 W/kg

This report shall not be reproduced except in full, without the written approval of UL VS Ltd.

006: Back of EUT Facing Phantom CDMA BC1 RC3 SO32 CH600
Date: 13/08/2015
DUT: A1460; Sleeve: Infinea TAB; Sleeve contains FCC ID: YRWDATECSBT301

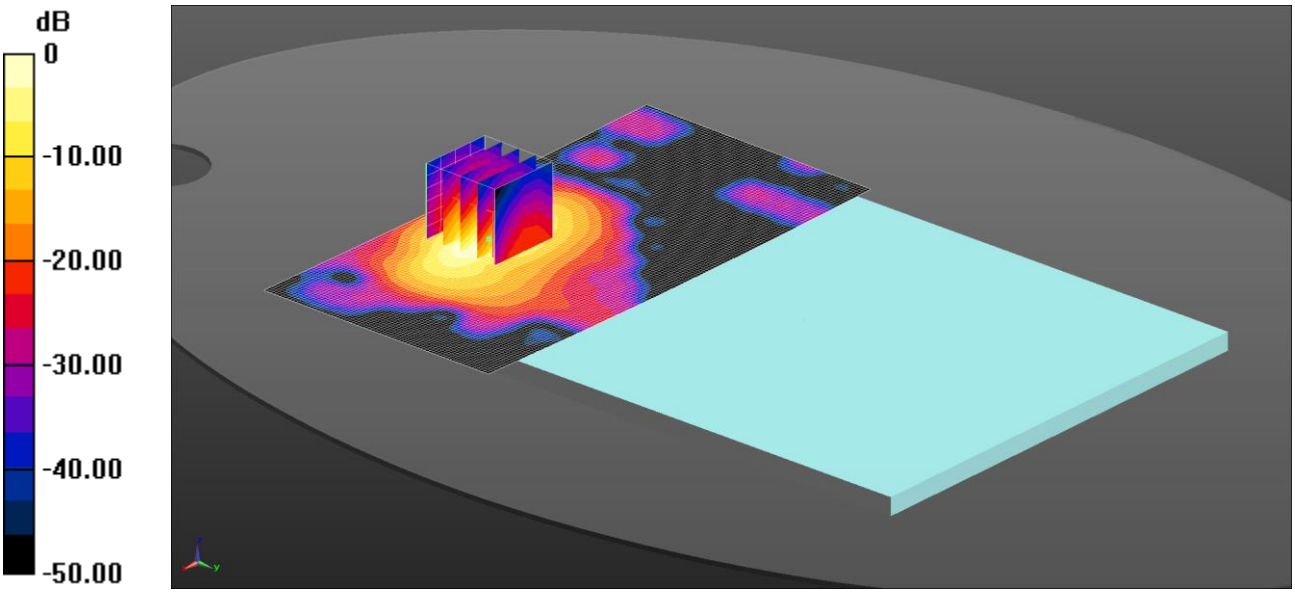

0 dB = 1.13 W/kg = 0.51 dBW/kg

Communication System: UID 0, CDMA2000 (0); Frequency: 1880 MHz;Duty Cycle: 1:1
Medium: 1900 MHz MSL Medium parameters used (interpolated): f = 1880 MHz; σ = 1.437 S/m; ε_r = 50.994; ρ = 1000 kg/m^3
Phantom section: Flat Section
DASY4 Configuration:
- Probe: EX3DV4 - SN3995; ConvF(7.72, 7.72, 7.72); Calibrated: 28/04/2015;
- Sensor-Surface: 4mm (Mechanical Surface Detection)
- Electronics: DAE3 Sn450; Calibrated: 16/09/2014
- Phantom: ELI v5.0; Type: QDOVA002AA; Serial: TP:xxxx
- ; SEMCAD X Version 14.6.10 (7164)

Configuration/Back of EUT Facing Phantom/Area Scan (141x71x1): Interpolated grid: dx=1.500 mm, dy=1.500 mm
Maximum value of SAR (interpolated) = 1.13 W/kg
Configuration/Back of EUT Facing Phantom/Zoom Scan (5x5x7) 2 (5x5x7)/Cube 0: Measurement grid: dx=8mm, dy=8mm, dz=5mm
Reference Value = 24.564 V/m; Power Drift = -0.02 dB
Peak SAR (extrapolated) = 1.89 W/kg
SAR(1 g) = 0.971 W/kg; SAR(10 g) = 0.459 W/kg
Maximum value of SAR (measured) = 1.14 W/kg

This report shall not be reproduced except in full, without the written approval of UL VS Ltd.

007: Back of EUT Facing Phantom CDMA BC10 RC3 SO32 CH580
Date: 12/8/2015
DUT: A1460; Sleeve: Infinea TAB; Sleeve contains FCC ID: YRWDATECSBT301

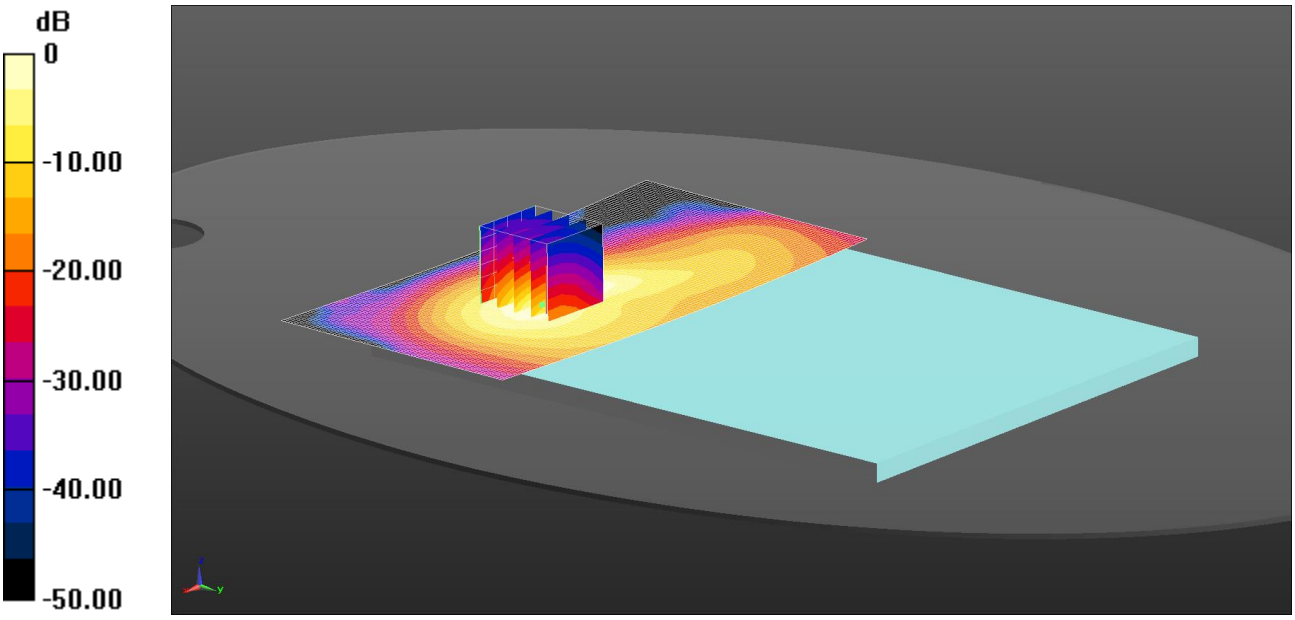

0 dB = 0.963 W/kg = -0.17 dBW/kg

Communication System: UID 0, CDMA2000 (0); Frequency: 820.5 MHz;Duty Cycle: 1:1
Medium: 900 MHz MSL Medium parameters used (interpolated): f = 820.5 MHz; σ = 1.016 S/m; ε_r = 54.186; ρ = 1000 kg/m^3
Phantom section: Flat Section
DASY4 Configuration:
- Probe: ET3DV6 - SN1586; ConvF(6.22, 6.22, 6.22); Calibrated: 22/5/2015;
- Sensor-Surface: 4mm (Mechanical Surface Detection)
- Electronics: DAE4 Sn1438; Calibrated: 29/4/2015
- Phantom: ELI v5.0 (30deg probe tilt); Type: QDOVA002AA; Serial: TP:xxxx
- ; SEMCAD X Version 14.6.10 (7331)

Configuration/Back of EUT Facing Phantom/Area Scan (141x71x1): Interpolated grid: dx=1.500 mm, dy=1.500 mm
Maximum value of SAR (interpolated) = 0.963 W/kg
Configuration/Back of EUT Facing Phantom/Zoom Scan (5x5x7) (5x5x7)/Cube 0: Measurement grid: dx=8mm, dy=8mm, dz=5mm
Reference Value = 29.41 V/m; Power Drift = 0.03 dB
Peak SAR (extrapolated) = 1.89 W/kg
SAR(1 g) = 0.940 W/kg; SAR(10 g) = 0.475 W/kg
Maximum value of SAR (measured) = 1.07 W/kg

This report shall not be reproduced except in full, without the written approval of UL VS Ltd.

008: Back of EUT Facing Phantom LTE Band 5 10MHz 50%RB Low CH20525
Date: 24/7/2015
DUT: A1460; Sleeve: Infinea TAB; Sleeve contains FCC ID: YRWDATECSBT301

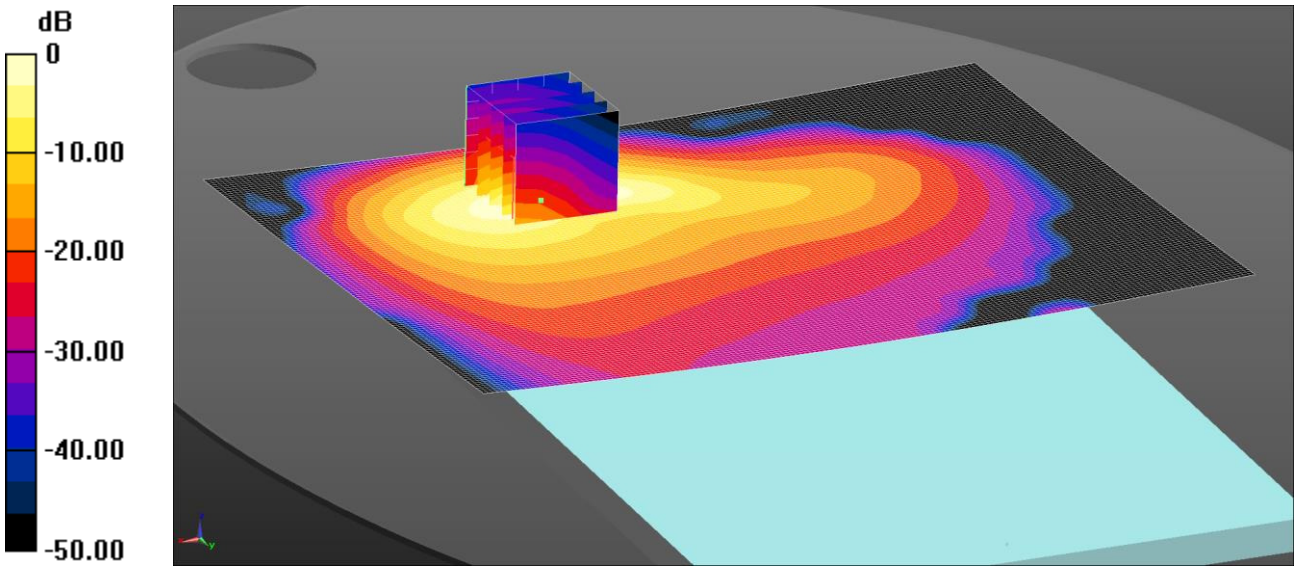

0 dB = 1.15 W/kg = 0.59 dBW/kg

Communication System: UID 0, LTE Bands - 10MHz Channel BW (0); Frequency: 836.5 MHz;Duty Cycle: 1:1
Medium: 900 MHz MSL Medium parameters used (interpolated): f = 836.5 MHz; σ = 1.012 S/m; ε_r = 54.528; ρ = 1000 kg/m^3
Phantom section: Flat Section
DASY4 Configuration:
- Probe: ET3DV6 - SN1586; ConvF(6.22, 6.22, 6.22); Calibrated: 22/5/2015;
- Sensor-Surface: 4mm (Mechanical Surface Detection)
- Electronics: DAE4 Sn1438; Calibrated: 29/4/2015
- Phantom: ELI v5.0 (30deg probe tilt); Type: QDOVA002AA; Serial: TP:xxxx
- ; SEMCAD X Version 14.6.10 (7331)

MFi FCC/Back of EUT Facing Phantom 2/Area Scan (161x121x1): Interpolated grid: dx=1.500 mm, dy=1.500 mm

Maximum value of SAR (interpolated) = 1.15 W/kg

MFi FCC/Back of EUT Facing Phantom 2/Zoom Scan (5x5x7) (5x5x7)/Cube 0: Measurement grid: dx=8mm, dy=8mm, dz=5mm
Reference Value = 20.48 V/m; Power Drift = -0.02 dB
Peak SAR (extrapolated) = 1.97 W/kg
SAR(1 g) = 0.986 W/kg; SAR(10 g) = 0.502 W/kg

Maximum value of SAR (measured) = 1.17 W/kg

This report shall not be reproduced except in full, without the written approval of UL VS Ltd.

009: Back of EUT Facing Phantom LTE Band 13 10MHz 50%RB High CH23230
Date: 12/8/2015
DUT: A1460; Sleeve: Infinea TAB; Sleeve contains FCC ID: YRWDATECSBT301

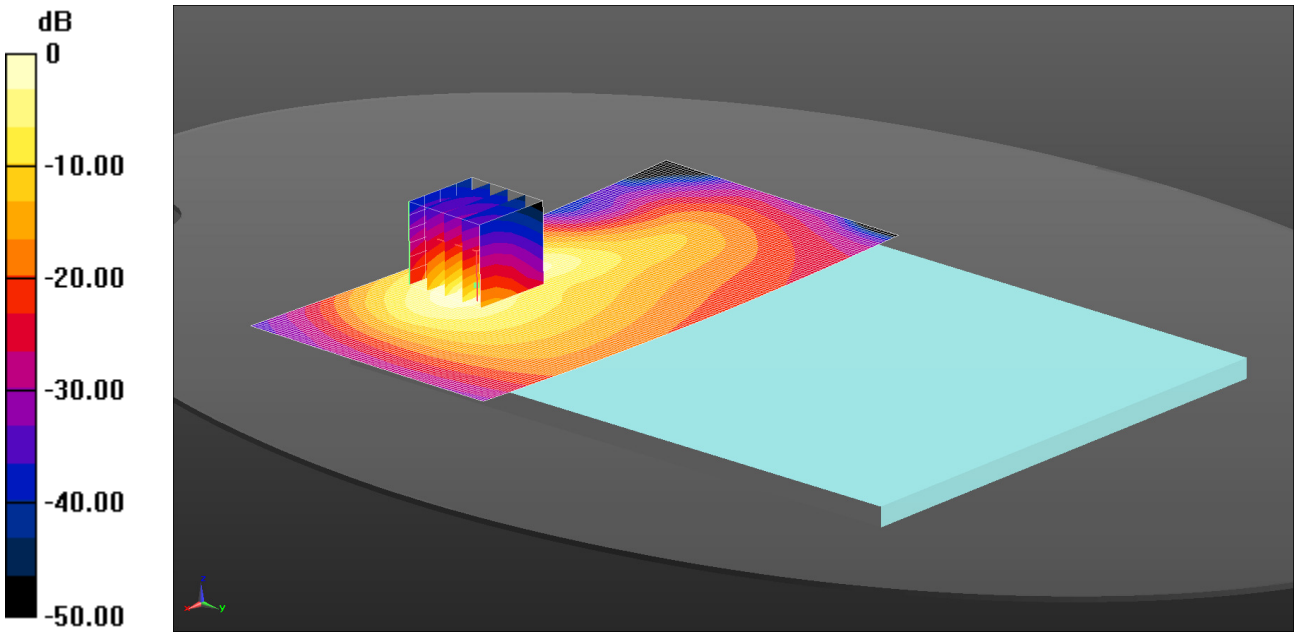

0 dB = 1.05 W/kg = 0.23 dBW/kg

Communication System: UID 0, LTE FDD Bands - 20MHz Channel BW (0); Frequency: 782 MHz;Duty Cycle: 1:1
Medium: 750 MHz MSL Medium parameters used (interpolated): f = 782 MHz; σ = 0.991 S/m; ε_r = 54.345; ρ = 1000 kg/m^3
Phantom section: Flat Section
DASY4 Configuration:
- Probe: ET3DV6 - SN1586; ConvF(6.36, 6.36, 6.36); Calibrated: 22/5/2015;
- Sensor-Surface: 4mm (Mechanical Surface Detection)
- Electronics: DAE4 Sn1438; Calibrated: 29/4/2015
- Phantom: ELI v5.0 (30deg probe tilt); Type: QDOVA002AA; Serial: TP:xxxx
- ; SEMCAD X Version 14.6.10 (7331)

Configuration/Back of EUT Facing Phantom/Area Scan (141x71x1): Interpolated grid: dx=1.500 mm, dy=1.500 mm
Maximum value of SAR (interpolated) = 1.05 W/kg
Configuration/Back of EUT Facing Phantom/Zoom Scan (5x5x7) (5x5x7)/Cube 0: Measurement grid: dx=8mm, dy=8mm, dz=5mm
Reference Value = 33.79 V/m; Power Drift = 0.02 dB
Peak SAR (extrapolated) = 2.04 W/kg
SAR(1 g) = 0.988 W/kg; SAR(10 g) = 0.501 W/kg
Maximum value of SAR (measured) = 1.16 W/kg

This report shall not be reproduced except in full, without the written approval of UL VS Ltd.

010: Back of EUT Facing Phantom LTE Band 25 1RB Low CH26365
Date: 21/08/2015
DUT: A1460; Sleeve: Infinea TAB; Sleeve contains FCC ID: YRWDATECSBT301

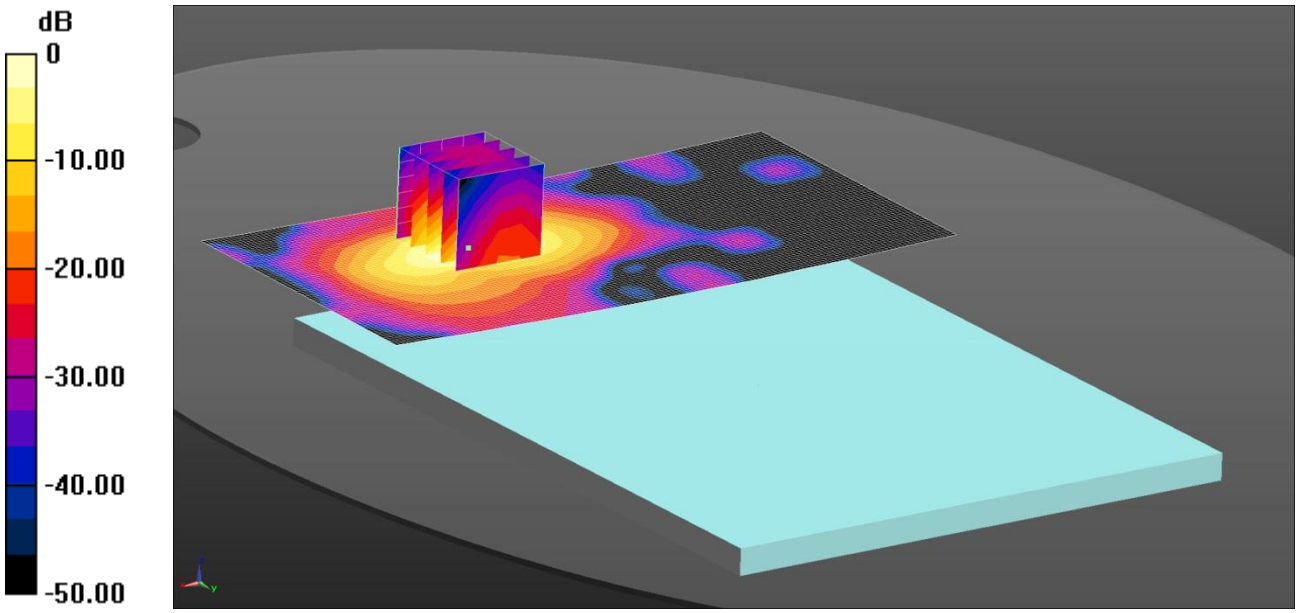

0 dB = 1.09 W/kg = 0.36 dBW/kg

Communication System: UID 0, LTE - Band 25 / 20MHz Channel; Frequency: 1882 MHz;Duty Cycle: 1:1
Medium: 1900 MHz MSL Medium parameters used (interpolated): f = 1882 MHz; σ = 1.457 S/m; εr = 53.611; ρ = 1000 kg/m3
Phantom section: Flat Section
DASY4 Configuration:
- Probe: EX3DV4 - SN3994; ConvF(7.63, 7.63, 7.63); Calibrated: 17/03/15;
- Sensor-Surface: 4mm (Mechanical Surface Detection)
- Electronics: DAE3 Sn394; Calibrated: 26/05/15
- Phantom: ELI v5.0; Type: QDOVA002AA; Serial: TP:xxxx
- ; SEMCAD X Version 14.6.10 (7331)

Configuration/Back of EUT/Area Scan (141x71x1): Interpolated grid: dx=1.500 mm, dy=1.500 mm
Maximum value of SAR (interpolated) = 1.09 W/kg

Configuration/Back of EUT/Zoom Scan (5x5x7) (5x5x7)/Cube 0: Measurement grid: dx=8mm, dy=8mm, dz=5mm
Reference Value = 26.89 V/m; Power Drift = -0.03 dB
Peak SAR (extrapolated) = 1.89 W/kg
SAR(1 g) = 0.971 W/kg; SAR(10 g) = 0.452 W/kg
Maximum value of SAR (measured) = 1.15 W/kg

This report shall not be reproduced except in full, without the written approval of UL VS Ltd.

011: Bottom of EUT Facing Phantom Wi-Fi 2.4 GHz 802.11b CH6
Date: 23/07/2015
DUT: A1460; Sleeve: Infinea TAB; Sleeve contains FCC ID: YRWDATECSBT301

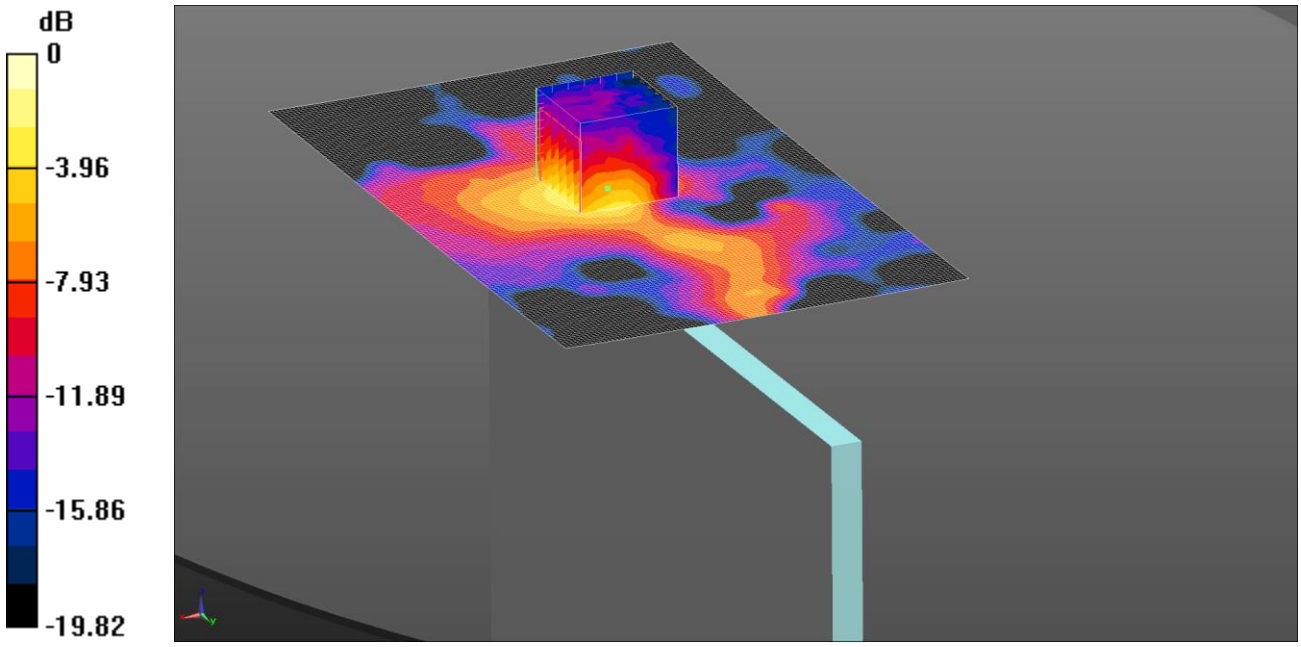

0 dB = 0.0468 W/kg = -13.30 dBW/kg

Communication System: UID 0, WLAN 802.11 (0); Frequency: 2437 MHz;Duty Cycle: 1:1
Medium: 2.4 GHz MSL Medium parameters used (interpolated): f = 2437 MHz; σ = 1.936 S/m; ε_r = 51.01; ρ = 1000 kg/m^3
Phantom section: Flat Section
DASY4 Configuration:
- Probe: EX3DV4 - SN3995; ConvF(7.4, 7.4, 7.4); Calibrated: 28/04/2015;
- Sensor-Surface: 4mm (Mechanical Surface Detection)
- Electronics: DAE3 Sn450; Calibrated: 16/09/2014
- Phantom: ELI v5.0; Type: QDOVA002AA; Serial: TP:xxxx
- ; SEMCAD X Version 14.6.10 (7164)

Configuration/Bottom of EUT Facing Phantom 2 2/Area Scan (101x161x1): Interpolated grid: dx=1.000 mm, dy=1.000 mm
Maximum value of SAR (interpolated) = 0.0487 W/kg

Configuration/Bottom of EUT Facing Phantom 2 2/Zoom Scan (7x7x12) (7x7x12)/Cube 0: Measurement grid: dx=4mm, dy=4mm, dz=2mm
Reference Value = 4.357 V/m; Power Drift = 0.15 dB
Peak SAR (extrapolated) = 0.0910 W/kg
SAR(1 g) = 0.040 W/kg; SAR(10 g) = 0.017 W/kg
Maximum value of SAR (measured) = 0.0468 W/kg

Note: SAR level measured is very low as equivalent to noise floor.

This report shall not be reproduced except in full, without the written approval of UL VS Ltd.

012: Bottom of EUT Facing Phantom Bluetooth CH39
Date: 18/08/2015
DUT: A1460; Sleeve: Infinea TAB; Sleeve contains FCC ID: YRWDATECSBT301

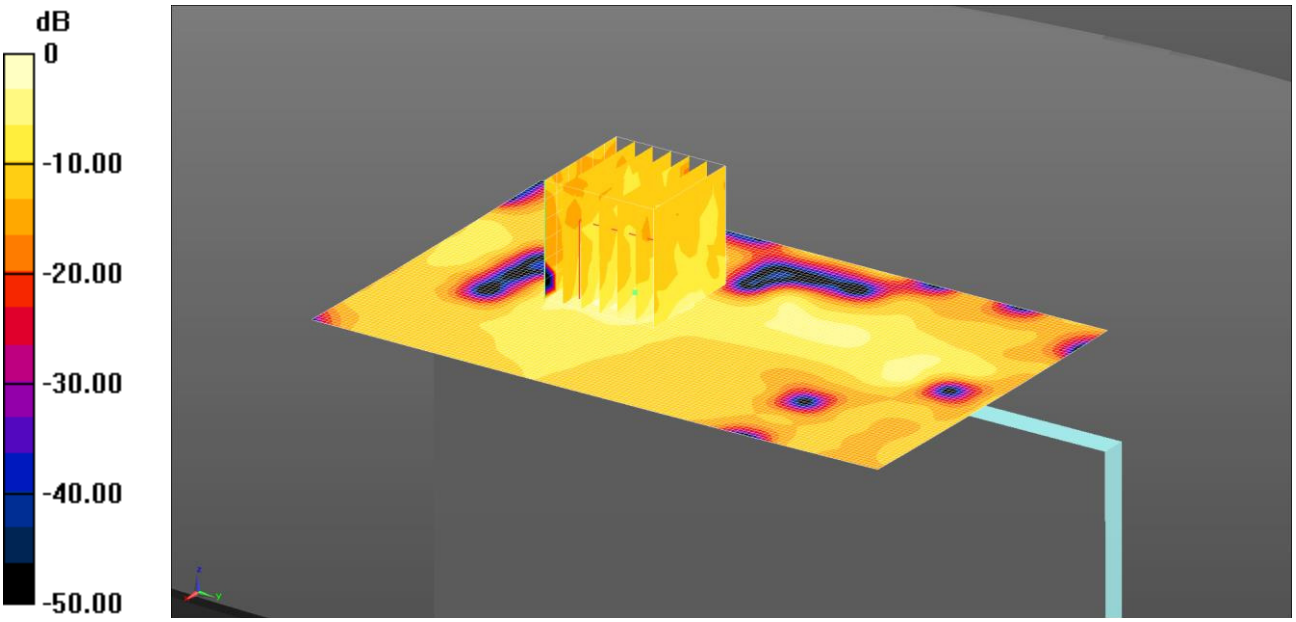

0 dB = 0.0239 W/kg = -16.21 dBW/kg

Communication System: UID 0, Bluetooth (0); Frequency: 2441 MHz;Duty Cycle: 1:1
Medium: 2450 MHz MSL Medium parameters used (interpolated): f = 2441 MHz; σ = 2.017 S/m; ε_r = 50.499; ρ = 1000 kg/m^3
Phantom section: Flat Section
DASY4 Configuration:
- Probe: EX3DV4 - SN3995; ConvF(7.4, 7.4, 7.4); Calibrated: 28/04/2015;
- Sensor-Surface: 2mm (Mechanical Surface Detection)
- Electronics: DAE3 Sn450; Calibrated: 16/09/2014
- Phantom: ELI v5.0; Type: QDOVA002AA; Serial: TP:xxxx
- ; SEMCAD X Version 14.6.10 (7164)

Configuration/Bottom of EUT Facing Phantom - Middle 2/Area Scan (81x131x1): Interpolated grid: dx=1.200 mm, dy=1.200 mm
Maximum value of SAR (interpolated) = 0.0239 W/kg
Configuration/Bottom of EUT Facing Phantom - Middle 2/Zoom Scan (7x7x7) (7x7x7)/Cube 0: Measurement grid: dx=5mm, dy=5mm, dz=5mm
Reference Value = 2.301 V/m; Power Drift = -0.03 dB
Peak SAR (extrapolated) = 0.0590 W/kg
SAR(1 g) = 0.011 W/kg; SAR(10 g) = 0.00444 W/kg
Maximum value of SAR (measured) = 0.0162 W/kg

Note: SAR level measured is very low as equivalent to noise floor.

This report shall not be reproduced except in full, without the written approval of UL VS Ltd.

013: Bottom of EUT Facing Phantom Wi-Fi 5.2 GHz 802 11n HT40 Ant 1 CH46
Date: 06/08/15
DUT: A1460; Sleeve: Infinea TAB; Sleeve contains FCC ID: YRWDATECSBT301

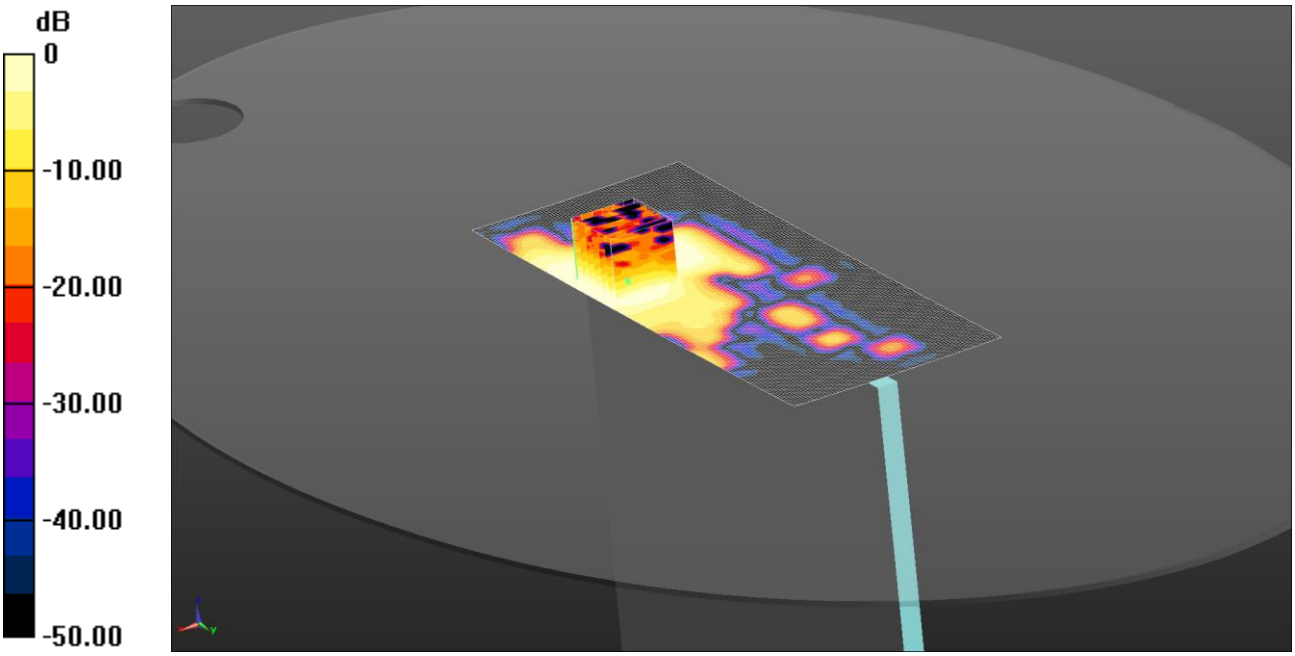

0 dB = 0.142 W/kg = -8.48 dBW/kg

Communication System: UID 0, WLAN 802.11 (0); Frequency: 5230 MHz;Duty Cycle: 1:1
Medium: 5200/5500/5800 MHz MSL Medium parameters used (interpolated): f = 5230 MHz; σ = 5.325 S/m; ε_r = 47.672; ρ = 1000 kg/m^3
Phantom section: Flat Section
DASY4 Configuration:
- Probe: EX3DV4 - SN3814; ConvF(4.38, 4.38, 4.38); Calibrated: 18/09/14;
- Sensor-Surface: 4mm (Mechanical Surface Detection)
- Electronics: DAE4 Sn1435; Calibrated: 20/02/15
- Phantom: ELI v5.0 (30deg probe tilt); Type: QDOVA002AA; Serial: TP:xxxx
- ; SEMCAD X Version 14.6.10 (7331)

Configuration/Bottom of EUT Facing Phantom 2/Area Scan (81x201x1): Interpolated grid: dx=1.000 mm, dy=1.000 mm
Maximum value of SAR (interpolated) = 0.150 W/kg
Configuration/Bottom of EUT Facing Phantom 2/Zoom Scan (7x7x12) (7x7x12)/Cube 0: Measurement grid: dx=4mm, dy=4mm, dz=2mm
Reference Value = 5.142 V/m; Power Drift = 0.04 dB
Peak SAR (extrapolated) = 0.394 W/kg
SAR(1 g) = 0.134 W/kg
Maximum value of SAR (measured) = 0.142 W/kg

Note: SAR level measured is very low as equivalent to noise floor.

This report shall not be reproduced except in full, without the written approval of UL VS Ltd.

014: Bottom of EUT Facing Phantom Wi-Fi 5.3 GHz 802 11a Ant 1 CH52
Date: 06/08/15
DUT: A1460; Sleeve: Infinea TAB; Sleeve contains FCC ID: YRWDATECSBT301

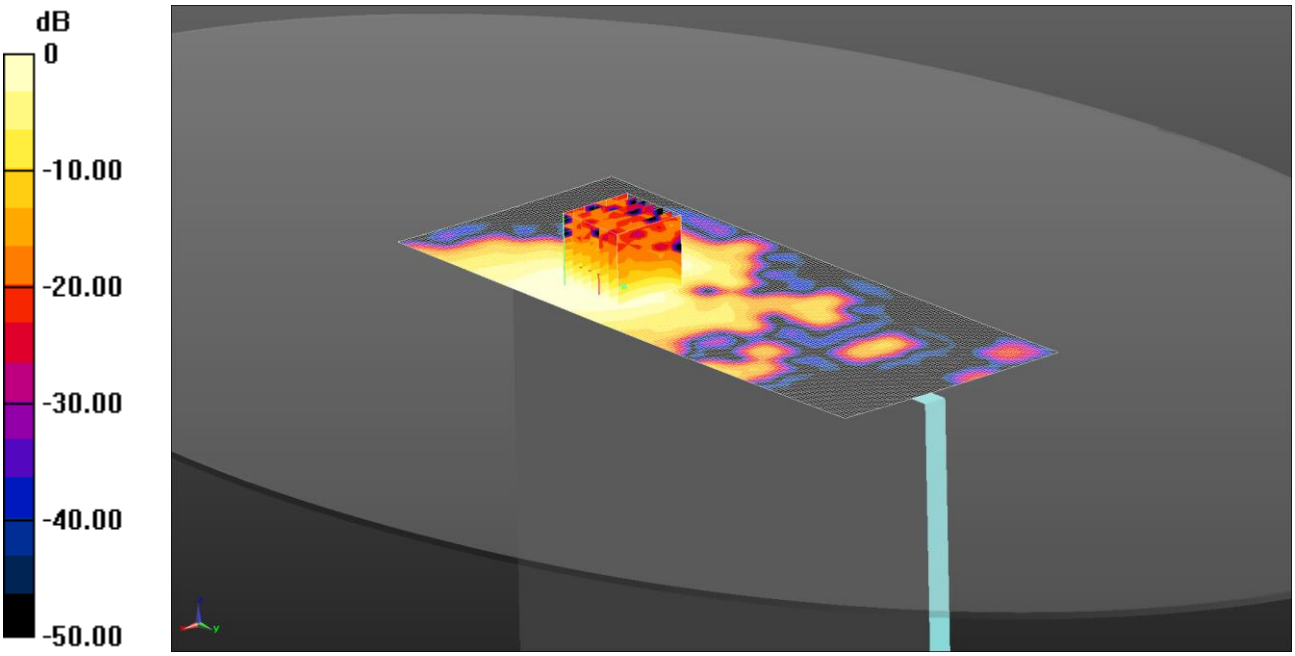

0 dB = 0.242 W/kg = -6.16 dBW/kg

Communication System: UID 0, WLAN 802.11 (0); Frequency: 5260 MHz;Duty Cycle: 1:1
Medium: 5200/5500/5800 MHz MSL Medium parameters used (interpolated): f = 5260 MHz; σ = 5.379 S/m; ε_r = 47.606; ρ = 1000 kg/m^3
Phantom section: Flat Section
DASY4 Configuration:
- Probe: EX3DV4 - SN3814; ConvF(4.18, 4.18, 4.18); Calibrated: 18/09/14;
- Sensor-Surface: 4mm (Mechanical Surface Detection)
- Electronics: DAE4 Sn1435; Calibrated: 20/02/15
- Phantom: ELI v5.0 (30deg probe tilt); Type: QDOVA002AA; Serial: TP:xxxx
- ; SEMCAD X Version 14.6.10 (7331)

Configuration/Bottom of EUT Facing Phantom 2/Area Scan (81x201x1): Interpolated grid: dx=1.000 mm, dy=1.000 mm
Maximum value of SAR (interpolated) = 0.244 W/kg
Configuration/Bottom of EUT Facing Phantom 2/Zoom Scan (7x7x12) (7x7x12)/Cube 0: Measurement grid: dx=4mm, dy=4mm, dz=2mm
Reference Value = 5.241 V/m; Power Drift = -0.16 dB
Peak SAR (extrapolated) = 0.501 W/kg
SAR(1 g) = 0.203 W/kg
Maximum value of SAR (measured) = 0.242 W/kg

Note: SAR level measured is very low as equivalent to noise floor.

This report shall not be reproduced except in full, without the written approval of UL VS Ltd.

015: Bottom of EUT Facing Phantom Wi-Fi 5.5 GHz 802 11a Ant 1 CH136
Date: 06/08/15
DUT: A1460; Sleeve: Infinea TAB; Sleeve contains FCC ID: YRWDATECSBT301

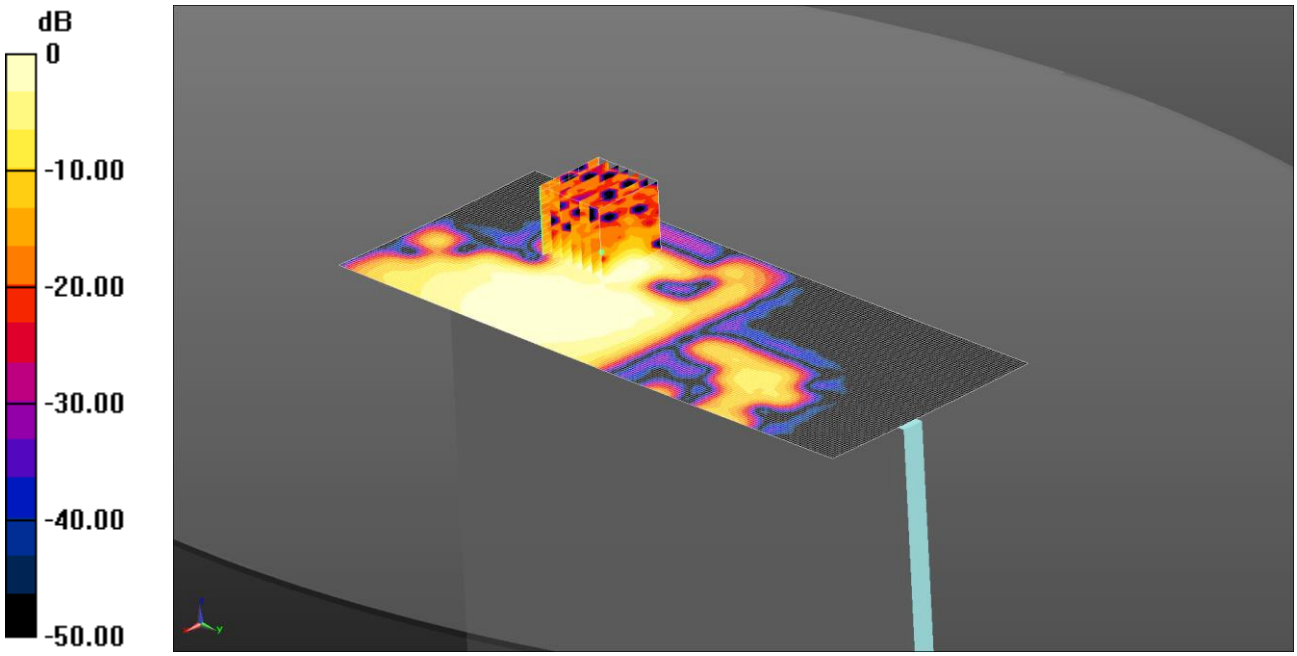

0 dB = 0.201 W/kg = -6.97 dBW/kg

Communication System: UID 0, WLAN 802.11 (0); Frequency: 5680 MHz;Duty Cycle: 1:1
Medium: 5200/5500/5800 MHz MSL Medium parameters used (interpolated): f = 5680 MHz; σ = 6.029 S/m; ε_r = 46.557; ρ = 1000 kg/m^3
Phantom section: Flat Section
DASY4 Configuration:
- Probe: EX3DV4 - SN3814; ConvF(4.06, 4.06, 4.06); Calibrated: 18/09/14;
- Sensor-Surface: 4mm (Mechanical Surface Detection)
- Electronics: DAE4 Sn1435; Calibrated: 20/02/15
- Phantom: ELI v5.0 (30deg probe tilt); Type: QDOVA002AA; Serial: TP:xxxx
- ; SEMCAD X Version 14.6.10 (7331)

Configuration/Bottom of EUT Facing Phantom 2/Area Scan (81x201x1): Interpolated grid: dx=1.000 mm, dy=1.000 mm
Maximum value of SAR (interpolated) = 0.254 W/kg
Configuration/Bottom of EUT Facing Phantom 2/Zoom Scan (7x7x12) (7x7x12)/Cube 0: Measurement grid: dx=4mm, dy=4mm, dz=2mm
Reference Value = 4.944 V/m; Power Drift = 0.05 dB
Peak SAR (extrapolated) = 1.02 W/kg
SAR(1 g) = 0.164 W/kg
Maximum value of SAR (measured) = 0.201 W/kg

Note: SAR level measured is very low as equivalent to noise floor.

This report shall not be reproduced except in full, without the written approval of UL VS Ltd.

016: Bottom of EUT Facing Phantom Wi-Fi 5.8 GHz 802 11a Ant 1 CH149
Date: 06/08/15
DUT: A1460; Sleeve: Infinea TAB; Sleeve contains FCC ID: YRWDATECSBT301

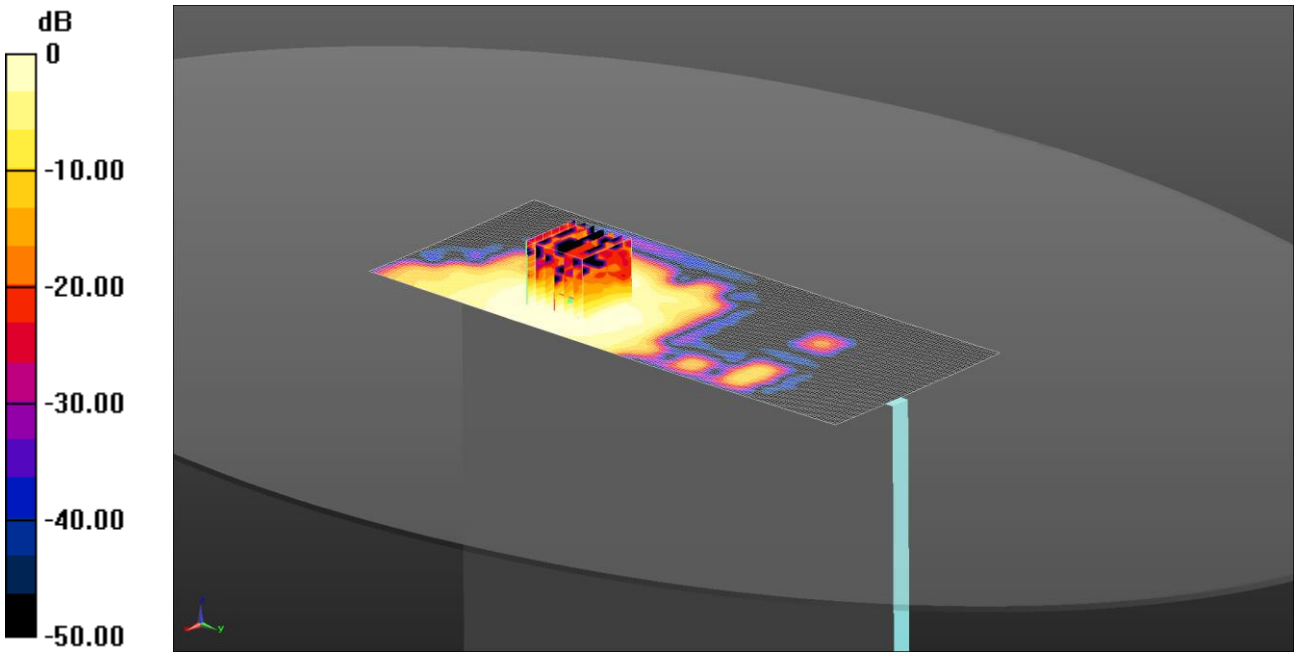

0 dB = 0.222 W/kg = -6.54 dBW/kg

Communication System: UID 0, WLAN 802.11 (0); Frequency: 5745 MHz;Duty Cycle: 1:1
Medium: 5200/5500/5800 MHz MSL Medium parameters used (interpolated): f = 5745 MHz; σ = 6.141 S/m; ε_r = 46.446; ρ = 1000 kg/m^3
Phantom section: Flat Section
DASY4 Configuration:
- Probe: EX3DV4 - SN3814; ConvF(4.06, 4.06, 4.06); Calibrated: 18/09/14;
- Sensor-Surface: 4mm (Mechanical Surface Detection)
- Electronics: DAE4 Sn1435; Calibrated: 20/02/15
- Phantom: ELI v5.0 (30deg probe tilt); Type: QDOVA002AA; Serial: TP:xxxx
- ; SEMCAD X Version 14.6.10 (7331)

Configuration/Bottom of EUT Facing Phantom 2/Area Scan (81x201x1): Interpolated grid: dx=1.000 mm, dy=1.000 mm
Maximum value of SAR (interpolated) = 0.243 W/kg
Configuration/Bottom of EUT Facing Phantom 2/Zoom Scan (7x7x12) 2 (7x7x12)/Cube 0: Measurement grid: dx=4mm, dy=4mm, dz=2mm
Reference Value = 6.088 V/m; Power Drift = -0.16 dB
Peak SAR (extrapolated) = 0.709 W/kg
SAR(1 g) = 0.217 W/kg
Maximum value of SAR (measured) = 0.222 W/kg

Note: SAR level measured is very low as equivalent to noise floor.

This report shall not be reproduced except in full, without the written approval of UL VS Ltd.