User Manual

ESC/POS PRINTER DPP-450

THE INFORMATION IN THIS DOCUMENT CANNOT BE REPRODUCED IN ANY MECHANICAL, ELECTRICAL
OR ELECTRONIC WAY AND UNDER ANY CIRCUMSTANCES WITHOUT THE WRITTEN CONSENT FROM DATECS LTD.

VERSION: June 2014

Legal Notice

“Made for iPod,” “Made for iPhone,” and Made for iPad” mean that an electronic accesory has been designed to connect specifically to iPod, iPhone, or iPad, respectively, and has been certified by the developer to meet Apple performance standards. Apple is not responsible fort he operation of this device or its compliance with safety and regulatory standards. Please note that the use of this accesory with iPod, iPhone, or iPad may affect wireless performance.

Compatability

Made for

iPhone 5

iPhone 5S

iPhone 5C

iPhone 4S

iPhone 4

iPod touch (5th generation)

iPod touch (4th generation)

iPod touch (3rd generation)

iPad (4th generation)

iPad mini

iPad (3rd generation)

iPad 2

iPad, iPhone, iPod touch are trademarks of Apple Inc., registered in the U.S. and other countries. Lightning is a trademark of Apple Inc.

This equipment has been tested and found to comply with the limits for a Class B digital device, pursuant to part 15 of the FCC Rules. These limits are designed to provide reasonable protection against harmful interference in a residential installation. This equipment generates, uses and can radiate radio frequency energy and, if not installed and used in accordance with the instructions, may cause harmful interference to radio communications. However, there is no guarantee that interference will not occur in a particular installation. If this equipment does cause harmful interference to radio or television reception, which can be determined by turning the equipment off and on, the user is encouraged to try to correct the interference by one or more of the following measures:

—Reorient or relocate the receiving antenna.

—Increase the separation between the equipment and receiver.

—Connect the equipment into an outlet on a circuit different from that to which the receiver is connected.

—Consult the dealer or an experienced radio/TV technician for help.

CAUTION: Use shielded cables to connect this device to computers.

Any changes or modifications not expressly approved by the grantee of this device could void the user's authority to operate the equipment.

CONTENTS

1. Introduction 6
2. Features 6
3. Technical specification 7
4. General view 7
   4.1 Dimensions and outlook 10
   4.2 Box Contents 11
5. Getting started 12
   5.1 Charge DPP-450 13
   5.2 Diagnostic information 14
   5.3 Loading paper 14
   5.4 Mounting belt clip 18
   5.5 Self-Test 18
   5.6 Page Mode 20
   5.7 Ruled lines 20
   5.8 Protocol mode 20
   5.9 Hardware setup 22
   5.10 List of commands 26
   5.11 Connecting Device 28
   5.12 Mount Strap 30

1. Introduction

DATECS DPP-450 is a mobile ESC/POS and LABEL thermal printer. It can be used in dynamic working conditions and its abundant built-in features allow it to be widely used for different applications. Printer can quickly and easily print text and/or graphics, depending on customer's needs – barcodes, logo, etc.

2. Features

The DPP-450 is a mobile line thermal printer, applicable for different applications as shown below:

- **Mobile**
- **Label Peeler**
- **traveling sales**
- **Retail**
- **Transportation**
- **Receipts**
- **Point of sales**
- **Distribution**

3. Technical specification

Printing Method	Direct line thermal	
Print Width	104mm, 832 dots/line	
Dot Density	8 x 8 dots/mm (203 dpi x 203 dpi)	
Print Speed	150mm/sec max	
Fonts	**Resident Fonts**: Font A: 48 characters/line Font B: 64 characters/line	**Loadable Fonts**: Font C: 48 characters/line Font D: 64 characters/line
Graphic Logo	1 x Black & White , Size: 832 x 248 dots	
Barcode Types	**1D**: EAN 13, EAN 8, UPC A, UPC E, Code 39, Code 93, Code 128, Codabar, 2 of 5 interleaved, **2D**: PDF417, QR code	
Paper spec:	• Width: 50-115mm • Paper roll: φ58mm or less • Thickness: 59-154µm	
Paper Loading	Easy paper loading	
Paper Feed System	Step	
Paper Type	Label/Receipt	
Paper sensor	• PE sensor • BM sensor • Label Gap sensor	
Post Printing Paper Treatment	Peeler for Labels Cutter for Receipts	
Connectivity	• RS-232C – max 115200bps • mini USB 2.0 (only device) • BT 2.0 Class 2 (option) - SPP - Serial Port Profile • BT 3.0 Class 2 (option) - SPP - Serial Port Profile - iAP - iPod Accessory Protocol • Wi-Fi 802.11b (option) - BSS and IBSS network mode • IrDA	

LED Indication	• Paper end or paper out • Cover open • Low battery • Print head overheating	• Battery charging
Audio Indications	Electro-magnetic buzzer	
Display	• LCD 128 x 64 dots • LED backlight	
Buttons	• Power button • Print button • Feed button	
Memory	4MB Flash(option)	
Buffer Size	up to 128 kB	
Periphery	• RFID card reader: • MiFARE Mini • MiFARE Classic 1K / 4K • MiFARE Ultra-Light / Ultra-Light-C • ISO 14443 • ISO 15693 • FeliCa • MiFARE Plus 2K / 4K	
Emulation	• ESC/POS • Eltron • ZEBRA*	
Power Supply	AC Adapter • Input: AC: 100-240V~, 50/60Hz • Output: DC19V, 5.2A	
Battery	Rechargeable Li-Ion battery 14.4V / 2200mAh Battery charge time – 2.5 hours Battery capacity per charge ~ 20 000 lines	
Reliability	Thermal head life: 50km Mechanism(MCBF): 15 000 000 lines	
Weight, kg	0.785(w/o paper, include battery) 0.850 (with paper, include battery)	
Dimensions,(WxDxH) mm	157 x 138 x 67	
Environmental	• Operating: -15°C to +50°C / 30 to 85% RH • Storage: -20°C to +60°C / 10 to 90% RH	

Drop Test	Height: 1m 3 times on each of the 6 faces 3 times on each of the 4 edges
OS compatibility	iOS, Android OS, BlackBerry OS, Windows OS, Win CE, Windows Mobile, Windows Phone
Accessories	• Neck strap • Metal belt clip • Carrying case • Single battery charger

4. General view

4.1 Dimensions and outlook

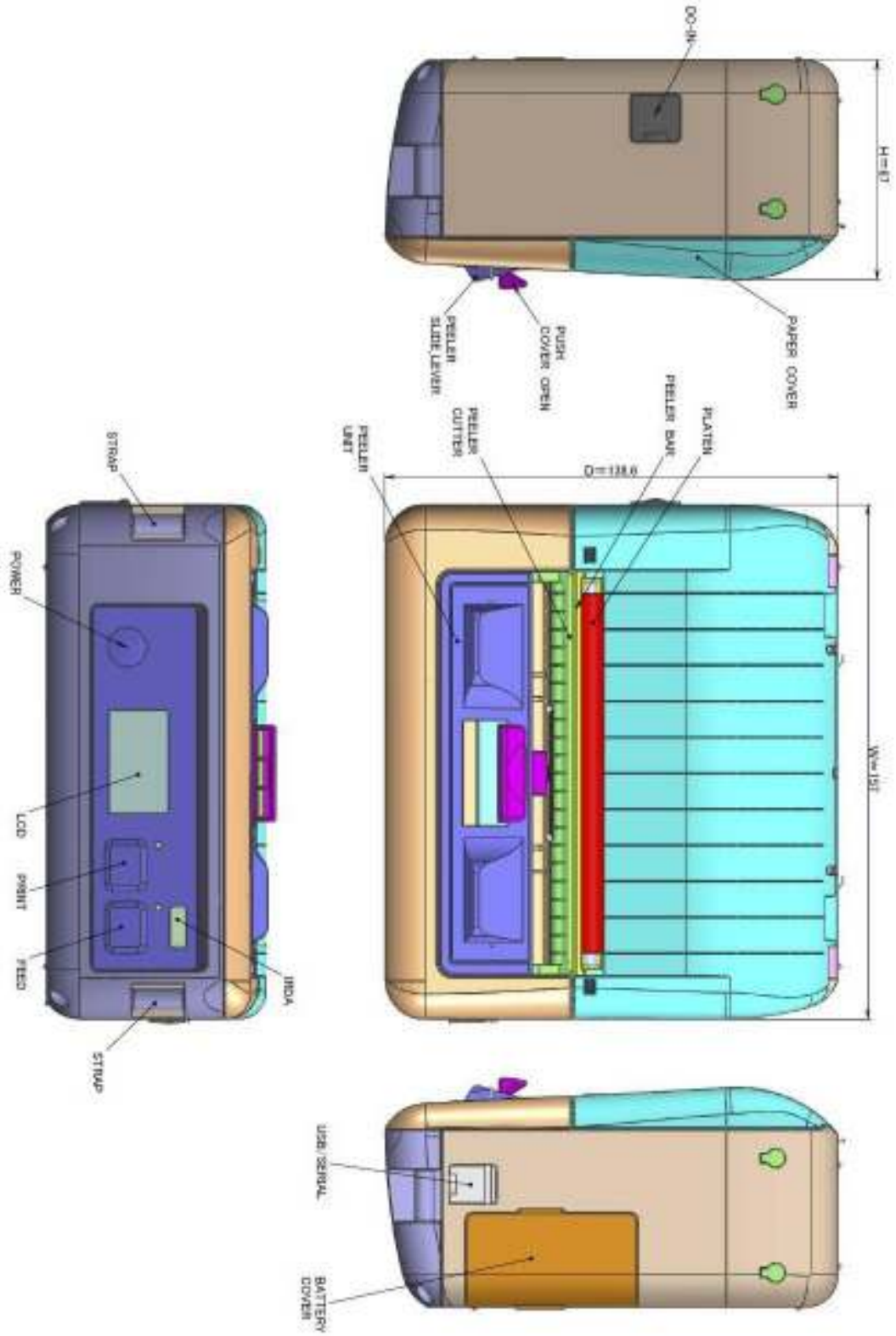

4.2 Box Contents

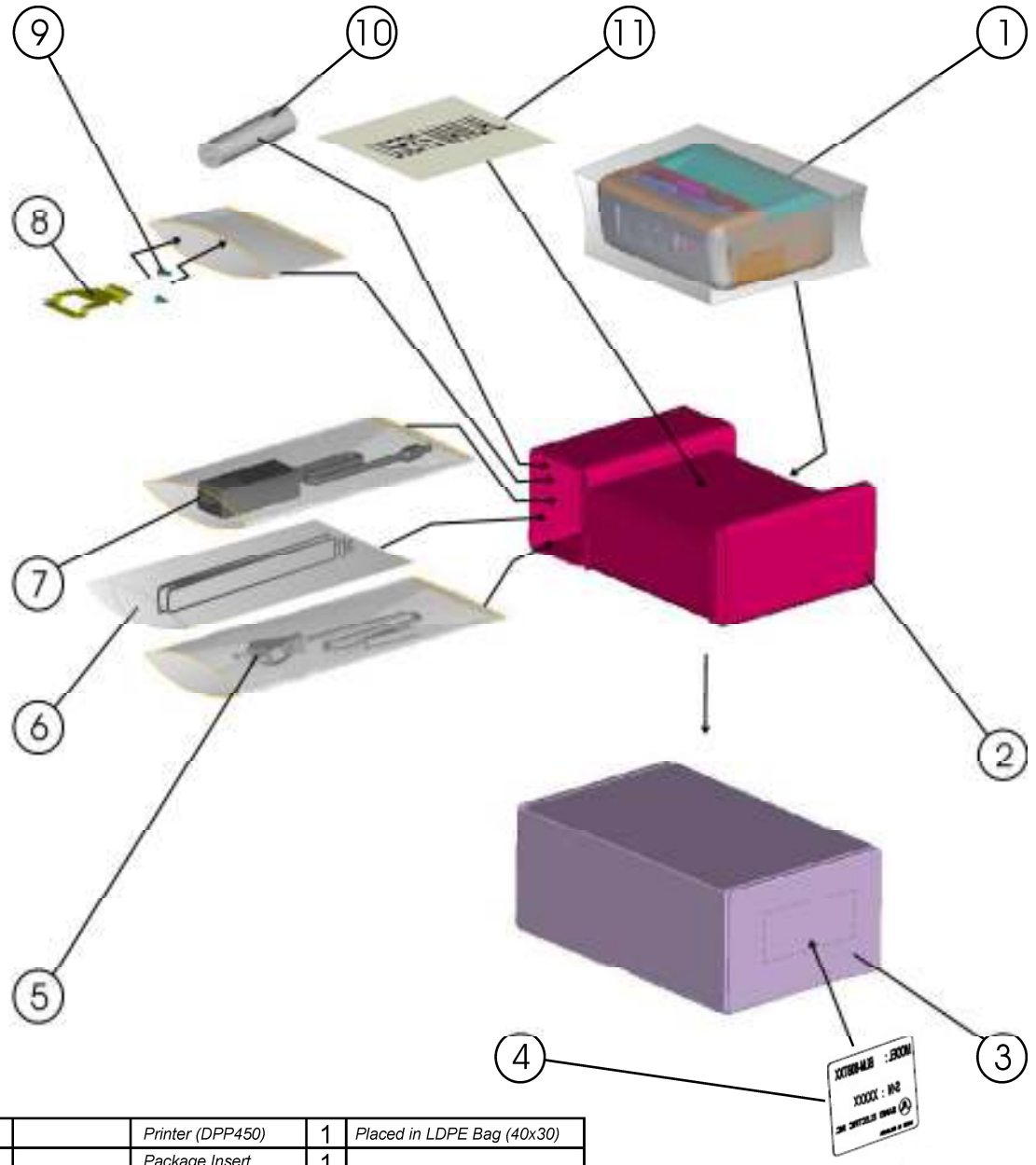

item	PART NUMBER	PART NAME	Qty.	REMARKS
1		Printer (DPP450)	1	Placed in LDPE Bag (40x30)
2		Package Insert	1	
3		Package Box	1	
4		Package label	1	
5		Power cable	1	Placed in LDPE Bag (29x12)
6		STRAP	1	Placed in LDPE Bag (16x10)
7		Adapter SA2-4A19P-A	1	Placed in LDPE Bag (25x10)
8		Belt Clip	1	Placed in LDPE Bag (10x14)
9		Screw	2	M3x8 with spring washer
10		Paper Roll	1	Ø30 h111.5 ± 0.5 mm
11		User Manual	1	A4 Paper

Software (Drivers & SDK):
Because of the continually evolving Driver & SDK to support new mobile devices, Drivers & SDK are distributed online and is available for download at our website indicated below. For details on using the DPP-450 Drivers & SDK, please refer to the SDK's documentation.

http://www.datecs.bg/en/products/DPP-450/2/264#

5. Getting started

The DPP-450 allows you to printer information from your PDA & Smart phone. Before using the DPP-450 thermal printer the battery should be properly charged. The following Quick Start guide will help to get your DPP-250 ready for use.

Steps	What to do	Purpose	Where to find more information
1	Charge the DPP-450 rechargeable battery pack as recommended in this manual	The Lithium Ion battery pack should be fully charged before use to ensure long battery life.	Charging Battery, Page 9
2.1	Load DPP-450 print media(Thermal paper roll)	DPP-450 requires Thermal paper for printing.	Loading Paper, Page 10
2.2	Load DPP-450 print media(Thermal label paper)	DPP-450 requires Thermal label paper.	Loading Paper, Page 10
3	Setup Bluetooth Paring	Setup Bluetooth pairing to allow DDP-450 to communicate with Bluetooth devices.	Bluetooth Setup, Page 24
4	Install DPP-450 Software	To print information from your device, software needs to be installed onto your device.	Install DPP-450 Software, Page 8

5.1 Charge DPP-450

The DPP-450 uses a Lithium-Ion rechargeable battery pack.
To prevent electrical damage to the DPP-450 and/or battery pack, please use approved AC Charger only.

Charging time is 3 hours from empty to full charge. When the battery is fully charged the device can print 150m paper roll, this is 3.5 rolls standart for DPP-450.

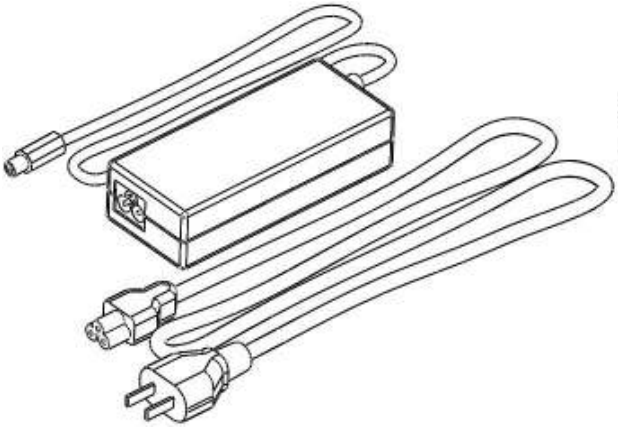

AC adapter and power cord

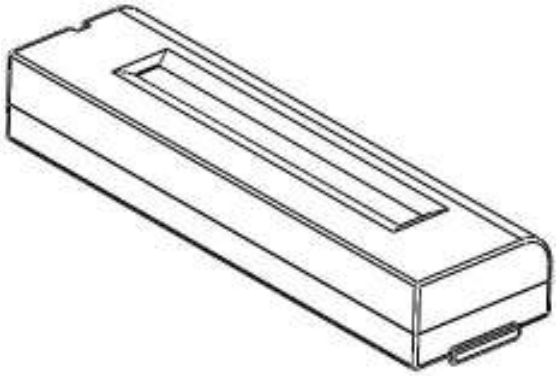

Battery

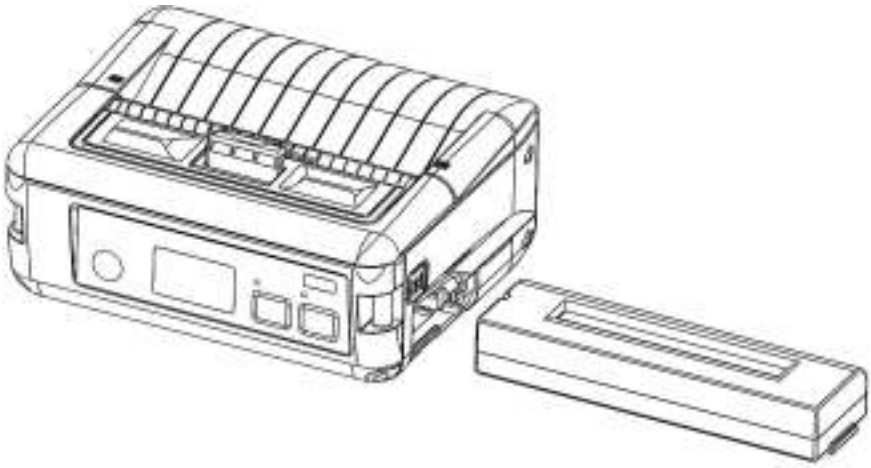

DPP-450 and battery

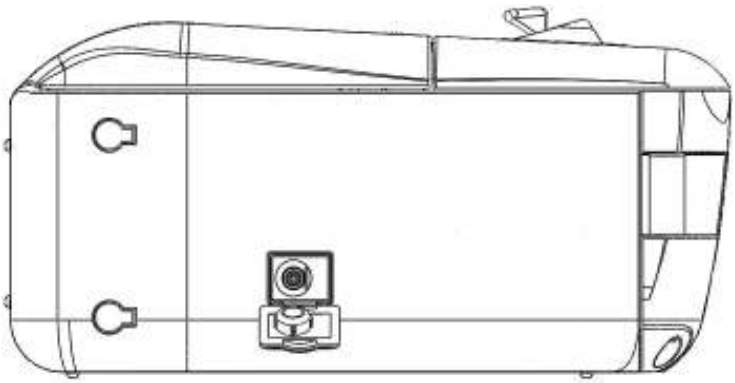

DPP-450 DC jack

Insert cable to dc jack to start charging.
When the device is turn on(holding turn on/off button), in display will show **"CHG"** text and greed led "CHARGE" is blink.

ECS/POS Ready
CHG

5.2 Diagnostic information

• Holding <LF> button while power on for ~ 0.5 sec (first sound signal) – short self-test.
• Holding <LF> button while power on for ~ 2.5 sec (second sound signal) – start dump mode. All input data are printed hexadecimal and as text.
• Holding <LF> button while power on for more than 8.5 sec (fifth 4-tone sound signal) – enter firmware
updating mode.
• Holding <ON/OFF> button while power on for ~ 4 sec (first sound signal):
- If serial cable is connected (RS232 communication) – temporary forcing 9600 bps serial
speed.
- If no serial cable connected (Bluetooth or USB communication) – starting a hardware menu
for fast Bluetooth pairing info reset.
• Holding <ON/OFF> button while power on for more than 6 sec – enter hardware setup mode.
• Holding <ON/OFF> button while power off for more than ~ 1sec.
• Holding <ON/OFF> button while less than ~ 1sec, backlight is turn on for short time.
• Holding <ON/OFF> button and press <LF> button – printing WIFI info.

5.3 Loading paper

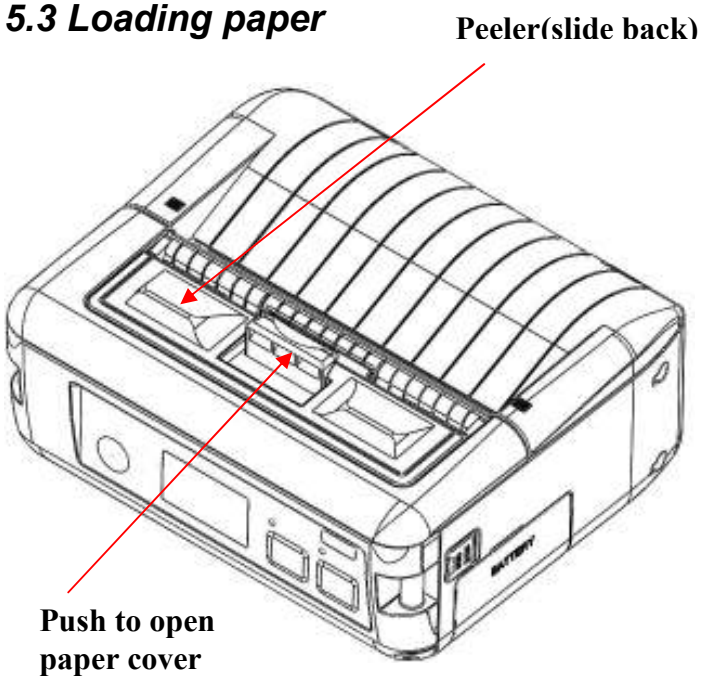

First slide peeler to position show on the picture. After this push to open paper cover.

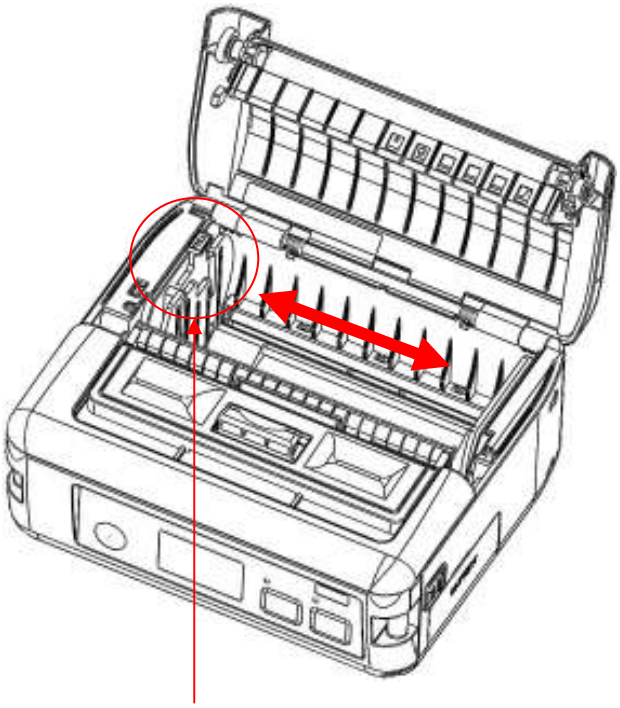

Lever for paper size

When the paper cover is open drop the new roll of thermal media. With green lever can choose size of thermal paper.

To choose paper size – pull up lever and push on right for small paper or left for big. When lever is in max. left position insert new paper(if size is different from last one) and pull up lever and push right until reach paper, then release lever.

Insert new paper

Right paper position

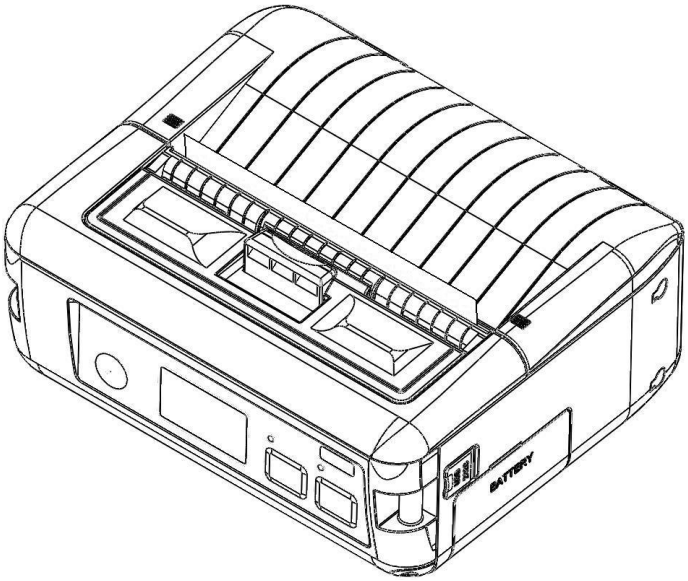

Close paper cover

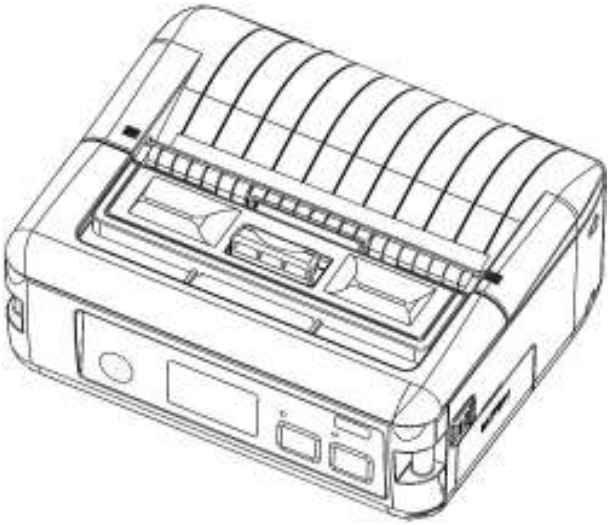

Slide peeler

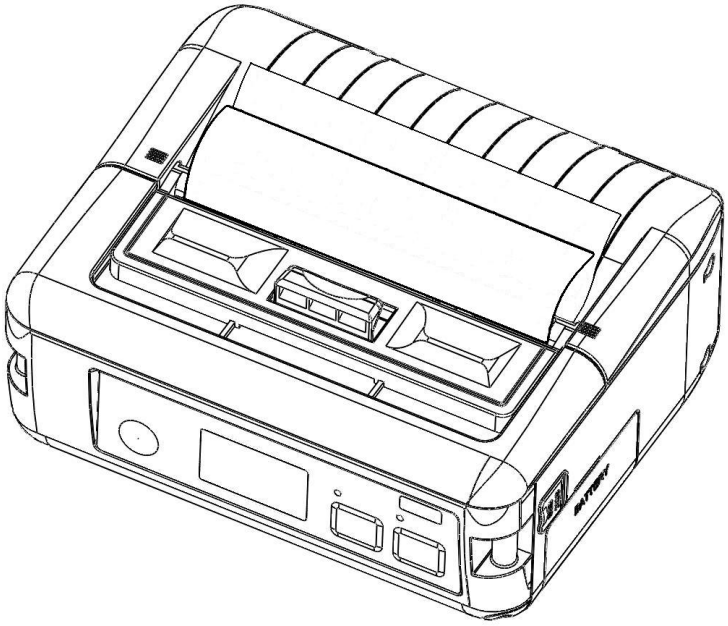

Peeler setting for label paper.

Peeler setting for paper roll.

5.4 Mounting belt clip

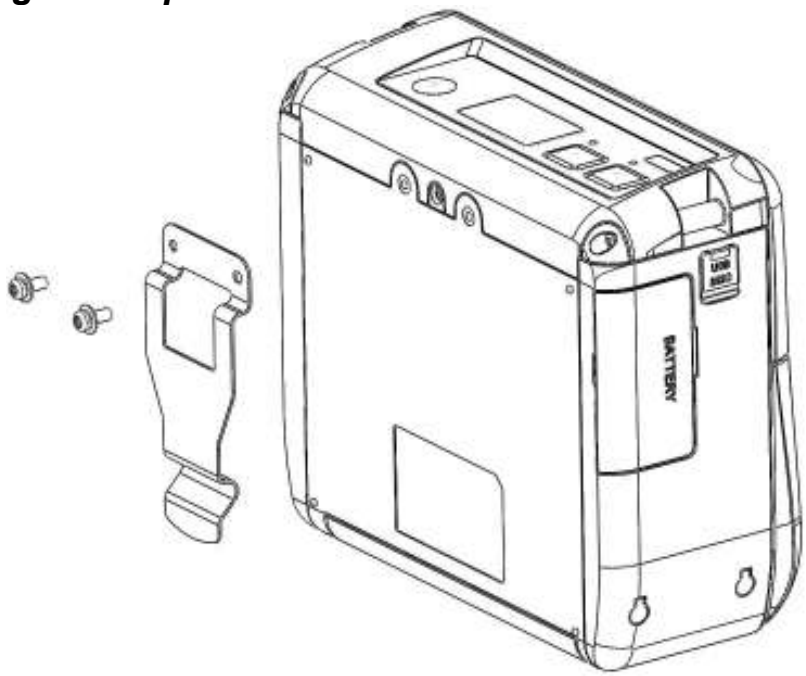

Using two screws.

5.5 Self-Test

• Holding <LF> button while power on for ~ 0.5 sec (first sound signal) – short self-test.

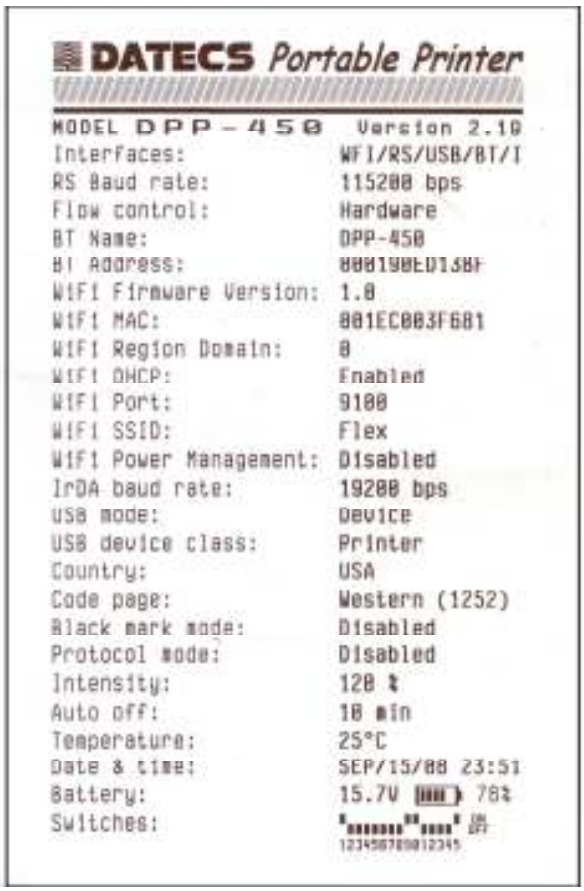

DATECS Portable Printer

MODEL DPP-450 Version 2.10

Interfaces:	WFI/RS/USB/BT/I
RS Baud rate:	115200 bps
Flow control:	Hardware
BT Name:	DPP-450
BT Address:	000190ED138F
WiFi Firmware Version:	1.0
WiFi MAC:	001EC003F681
WiFi Region Domain:	0
WiFi DHCP:	Enabled
WiFi Port:	9100
WiFi SSID:	Flex
WiFi Power Management:	Disabled
IrDA baud rate:	19200 bps
USB mode:	Device
USB device class:	Printer
Country:	USA
Code page:	Western (1252)
Black mark mode:	Disabled
Protocol mode:	Disabled
Intensity:	120 %
Auto off:	10 min
Temperature:	25°C
Date & time:	SEP/15/08 23:51
Battery:	15.7V 78%
Switches:	ON OFF 12345678901 2345

The DPP-450 has a built-in test pattern that shows the printer's current configuration as well as the various resident printer fonts. The self-test can also be used as a troubleshooting tool to determine printing problems or battery level. The steps below show how the self-test is printed activated.

• Holding <LF> button while power on for ~ 5.5 sec (third sound signal) – self-test.

- Resident font sizes
- Characters per line
- Text formatting
- Resident character set
- Resident barcode symbols
- Printer’s configuration

5.6 Page Mode

In page mode the result of incoming commands is forwarded to a reserved memory area (page). The page place and size is defined using command ESC W. Command GS T selects the print direction in this page. At the end the collected information is printed using one of the commands, provided for this. Commands ESC FF and GS FF print only the currently defined page, but command ESC Z prints the area between the first and last line containing at least one black point.

All commands except GS L and GS W work in page mode. The centering and right alignment
(command ESC a) is working in the currently defined page width.

5.7 Ruled lines

The printer has two line buffers with size the maximum printing width (paper width in standard mode or the selected page width in page mode). When ruled lines are active, then every horizontal line of the text line is combined with the selected ruled line buffer. Bit '1' in the ruled line buffer is a black dot in OR mode and inverts the color of the dot in XOR mode. Two commands allow the ruled line buffers to be printed without combining with a text line.

When pressing the FEED button, no ruled lines buffer is applied.
All ruled lines commands start with symbol DC3 (ASCII code 13h). Please see command DC2 = , too .

Warning!

The ruled lines print position depends not on GS L and GS W (left margin and line width) and is always at the beginning of the line (or at the beginning of the printable area in page mode). The printed text and graphic change their position according these commands.

When printing 180 degrees rotated lines (command ESC { 1) ruled lines buffers are not rotated!

5.8 Protocol mode

Protocol mode is active when hardware switch 11 is on. The purpose of this mode is to give stronger real time access to the printer. All input data are sent in packets as described below. The printer returns an answer to the packet immediately.

Output packet format: **Channel Command LenHi LenLo Data**
Answer format: **Channel Status LenHi LenLo Data**

Channel: One byte:
Bits 0 – 6 Channel number (Device type)
Bit 7 **0:** Send data; **1:** Response
Command: One byte with possible value:
0: Open channel (No action – all channels always open)
1: Close channel (No action – all channels always open)

2: Send data
3: Request data
>4: Application specific

Status: One byte:

	0	1
Bit 0	No error	Error occured
Bit 1	ACK (Packet accepted)	NACK (Packed not accepted)
Bit 2	Channel and command OK	Wrong channel or command
Bit 3	Battery OK	Low battery
Bit 4	Printing head OK	Printing head too hot
Bit 5	Paper OK	Out of paper
Bit 6	Not defined	
Bit 7	Printer ready	Printer busy

Bit 7 is set, if:

- There are unprinted lines in the print buffer.
- There are bytes in the print buffer.
- The printer is executing a macro.
- The printer is executing selftest.
- The button <LF> is pressed – feeding paper.

LenHi: High byte of data length of data. 00h to 08h.
LenLo: Low byte of data length of data. 00h to FFh.
Data: **256*LenHi +LenLo** data bytes.

The maximum packet length is 2048 bytes.

The answer differs from the command by bit 7 (MSB) in the channel number. If bit 7 is 0 then it is a command, if it is 1 then it is a response. Bit 0 in the status byte shows if there was an error accepting or processing the data block. If this bit is 1 the other bits show the type of the error.

The printer never issues a transmission by itself. It always responds as an answer to a command. The communication goes like this:

Host – command, Printer – answer; Host – command, Printer – answer; etc.

The defined channels are:

1 Printer.
16 (10h) Optional card reader.

Commands for the printer channel (1):

Command 2 Send data

The data is copied into the printer's print buffer. If there's not enough space into the print buffer the packet is rejected, and a status byte with value 3 is returned in the answer.

Command 3 Receive data

If there is data to be transmitted from the printer to the host, it is transmitted in the data field of the packet, otherwise an empty packet is received. The application must take care to get the data fast enough from the output buffer or the data may be corrupt.

Command 4 Get printer status. 5 data bytes returned in response:

BufferHi BufferLo PrStatus Volt Temperature

BufferHi High byte of the count of free bytes in input buffer.

BufferLo Low byte of the count of free bytes in input buffer.

PrStatus Printer status. The following bits defined:

Bit 0 Battery low

Bit 1 Too hot

Bit 2 No paper

Volt The battery voltage in units 0.1V

Temperature The head temperature in degrees Celsius.

If free bytes in input buffer are more than 65535 (FFFFh), then FFFFh is returned.

Using channel 16 is the only way for full control over the optional card reader.

Communication example (all bytes hexadecimal):

Send data:

```
>>>  01 02 00 05   11 22 33 44 55
<<<  81 00 00 00
```

Send data with error:

```
>>>  01 02 00 05   11 22 33 44 55
<<<  81 01 00 00
>>>  01 02 00 05   11 22 33 44 55
<<<  81 01 00 00
>>>  01 02 00 05   11 22 33 44 55
<<<  81 00 00 00
```

Receive data:

```
>>>  01 03 00 00
<<<  81 00 00 00
>>>  01 03 00 00
<<<  81 00 00 04   11 22 33 44
>>>  01 03 00 00
<<<  81 00 00 00
```

Get status:

```
>>>  01 04 00 00
<<<  81 00 00 05   3F F8 01 49 27
```

5.9 Hardware setup

Holding <ON/OFF>button while power on for more than 6sec. – enter hardware setup mode. “STATUS”(red led) will blink once, after this device is printing message:

```
HARDWARE SETUP
WARNING! USING HARDWARE MENU
MAY CAUSE UNWANTED SETTINGS!
PRESS ⏻ TO EXIT
```

Then press FEED button, to enter Hardware menu. Device will prining current settings.

```
READ QUESTIONS CAREFULLY!
CURRENT SETTINGS
MEM. SWITCHES:  100000001100001
  ENABLE SOUND:                  YES
  EXECUTE <CR> AS <LF>:          NO
  DISABLE <LF> COMMAND:          NO
  DISABLE <LF> AFTER <CR>:       NO
  DEFAULT SMALL FONT:            NO
  USE GAP SENSOR:                NO
  BLACK MARK MODE:               NO
  XON/XOFF:                      NO
  ENABLE USB INTERFACE:          YES
  USB IN DEVICE MODE:            YES
  PROTOCOL MODE:                 NO
  DISABLE BLUETOOTH:             NO
  DEFAULT SELECT DISPLAY:        NO
  DISABLE DISCOVERABILITY:       NO
  LCD FOREIGN LANGUAGE:          YES
BAUD RATE:      115200 bps
IrDA BAUD RATE: 19200 bps
AUTO OFF TIME:  10 min
PRINT DARKNESS: 120 %
CHARACT. TABLE: Western (1252)
USB DEV. CLASS: Printer
<PRINT> select item
<FEED> choose item
Press ⏻ short to cancel
Hold ⏻ long to turn off
```

The LCD in hardware configuration menu:

```
FACTORY DEFAULT
MEM. SWITCHES:
BAUD RATE:
IrDA BAUD RATE:
```

With button “PRINT” can move down and with “FEED” can enter in selected.

Hardware menu tree:

FACTORY DEFAULT

YES
NO

MEM. SWITCHES

ENABLE SOUND	Enable/Disable printer's buzzer
EXECUTE <CR> AS <LF>	Disable CR/CR is executed as LF
DISABLE <LF> COMMAND	Enable/Disable LF
DISABLE<LF>AFTER	Disable LF immediately after CR
DEFAULT SMALL FONT	Set the small font as default
USE GAP SENSOR	Enable/Disable the GAP sensor
BLACK MARK MODE	Enable/Disable the black mark sensor
XON/XOFF	Enable/Disable XON/XOFF protocol
ENABLE USB INTERFACE	Enable/Disable USB communication port
USB IN DEVICE MODE	Changing the USB HOST/DEVICE mode
PROTOCOL MODE	Enable/Disable Protocol mode
DISABLE BLUETOOTH	Enable/Disable Bluethooth communication
DEFAULT SELECT DISP	Set the main display as default
DISABLEDISCOVERABILITY	Enable/Disable printer's discoverability
LCD FOREIGN LANGUAGE	
DISCARD	Exit without saving configuration
ACCEPT	Exit with saving configuration

BAUDRATE

Changing the printer communication speed (RS)

- **115200 bps**
- **38400 bps**
- **31200 bps**
- **2400 bps**
- **4800 bps**
- **9600 bps**
- **19200 bps**
- **57600 bps**

IrDA BAUD RATE

Changing the IrDA communication speed

- **19200 bps**
- **9600 bps**
- **38400 bps**
- **57600 bps**
- **115200 bps**

AUTO OFF TIME

Changing the printer's auto OFF time

- **10 min.**
- **15 min.**
- **20 min.**
- **30 min.**
- **45 min.**
- **60 min.**
- **0 min**

- **2 min.**
- **5 min.**

PRINT DARKNESS Changing the printing darkness

- **120 %**
- **140 %**
- **160 %**
- **60 %**
- **75 %**
- **90 %**
- **100 %**

CHARACTER TABLE Changing the printer's character table

- **Western (1252)**
- **CE (1250)**
- **Turkish (1254)**
- **Baltic (1257)**
- **Cyrillic (1251)**
- **Greek (1253)**
- **Hebrew (1255)**
- **Katakana**
- **Arabic**
- **Arabic (1256)**
- **Arabic (1256A)**
- **Arabic (1256F)**
- **Thai (874)**
- **VISCII**
- **English (437)**
- **Latin 1 (850)**
- **Portuguese (860)**
- **Lithuanian**
- **Latin 2 (852)**
- **Polish**
- **Turkish (857)**
- **Baltic (775)**
- **Bulgarian (856)**
- **Russian (866)**
- **Latvian**
- **Greek (737)**
- **Hebrew (862)**

PAIRING INFO Resetting pairing info // Enable/Disable saving pairing info

- **Disable authentication**
- **Change pairing info**
- **Save pairing info**

USB DEV. CLASS Changing the USB device class of the printer Printer/Serial

- **Printer**
- **Serial**

SAVE & EXIT MENU

5.10 List of commands

1	BEL	Sounds the buzzer
2	HT	Horizontal Tab command configuration flags 2, 3 and 4
3	LF	Printing a line and Paper Feeding command
4	FF	Printing and paper feeding to the black mark position
5	CR	The operation of the command depends on the state of the
6	DC2 =	Image LSB/MSB select
7	DC3	(DC3 (Ruled line) commands sequence start
8	DC3 +	Sets the ruled line ON
9	DC3 -	Sets the ruled line off
10	DC3 A	Selects ruled line A
11	DC3 B	Selects ruled line B
12	DC3 C	Clears selected ruled line buffer
13	DC3 D	Sets a single dot in selected ruled line buffer
14	DC3 F	Ruled line pattern set
15	DC3 L	Ruled line line set
16	DC3 M	Selects ruled line combine mode
17	DC3 P	Ruled line 1 dot line print
18	DC3 p	Ruled line n dots line print
19	DC3 v	Ruled line image write
20	CAN	Canceling print data in page mode
21	ESC FF	Printing data in page mode
22	ESC RS	Sounds the buzzer
23	ESC SP	Setting character spacing
24	ESC #	Setting EURO symbol position
25	ESC $	Specifying the absolute horizontal position of printing
26	ESC %	Selecting/Canceling the printing of downloaded user character sets
27	ESC &	Selecting user character set
28	ESC !	Specifying printing mode of text data
29	ESC *	Printing graphical data
30	ESC +	Switchs OFF the printer
31	ESC -	Selecting/Canceling underlining
32	ESC .	Printing self test/diagnostic information
33	ESC 2	Specifying 1/6-inch line feed rate
34	ESC 3	Specifying line feed rate n/203 inches
35	ESC <	Changes print direction to opposite
36	ESC =	Data input control
37	ESC >	Selecting print direction
39	ESC @	Initializing the printer
40	ESC CAL	Black mark mode sensor calibration

41	ESC D	Setting horizontal tab position
42	ESC E	Specifying/Canceling highlighting
43	ESC F	Filling or inverting the page area in page mode
44	ESC G	Specifying/Canceling highlighting
45	ESC I	Specifying/Canceling Italic print
46	ESC J	Printing and Paper feed n/203 inches
47	ESC L	Selecting page mode
48	ESC N	Reading programmed serial number
49	ESC R	Selecting country
50	ESC S	Specifying speed (bps) of the serial port
51	ESC T	Printing short self test
52	ESC U	Selecting/Canceling underlined printing
53	ESC V	Selecting/Canceling printing 90°- right turned characters
54	ESC W	Defining the print area in page mode
55	ESC X	Specifying max printing speed
56	ESC Y	Selecting intensity level
57	ESC Z	Returning diagnostic information
58	ESC \	Specifying relative horizontal position
59	ESC]	Loading the default settings stored in Flash memory
60	ESC ^	Saving current settings in Flash memory
61	ESC _	Loading factory settings
62	ESC `	Reading the Battery Voltage and Thermal head temperature
63	ESC a	Aligning the characters
64	ESC b	Increasing text line height
65	ESC c5	Enabling/Disabling the functioning of the button LF
66	ESC d	Printing and feeding paper by n- lines
67	ESC i	Feeding paper backwards
68	ESC o	Temporarily feeding paper forward
69	ESC pair=	Enabling/Disabling PAIRING info saving in Bluetooth mode
70	ESC pwd=	Programming a new Bluetooth password (PIN)
71	ESC r	Full command for sounding buzzer
72	ESC s	Reading printer settings
73	ESC u	Selecting code table
74	ESC v	Transmitting the printer status
75	ESC x	Setting the time interval for automatically switching Off the printer
76	ESC y	Setting USB response strings
77	ESC {	Enabling/Canceling printing of 180° turned characters
78	GS FF	Printing in page mode and returning to standard mode
79	GS $	Specifying the absolute vertical position in page mode
80	GS)	Setting printer flags (memory switches)
81	GS *	Defining a Downloaded Bit Image (logo)
82	GS /	Printing a Downloaded Bit Image
83	GS :	Starting/ending macro definitions
84	GS B	Enabling/Disabling inverse printing (white on black)
85	GS C	Read the Real Time Clock
86	GS H	Selecting printing position of HRI Code
87	GS L	Setting the left margin
88	GS Q	Printing 2-D barcodes

89	GS R	Filling or inverting a rectangle in page mode
90	GS S	Selecting 2-D barcode cell size
91	GS T	Selecting the print direction in page mode
92	GS U	Selecting standard mode
93	GS W	Setting the print area width
94	GS X	Drawing a rectangular box with selected thickness in page mode
95	GS Z	Printing the non blank page area only in page mode
96	GS \	Specifying the relative vertical position in page mode
97	GS ^	Executing macro
98	GS c	Setting the Real Time Clock
99	GS f	Setting the font of HRI characters of the barcode
100	GS h	Setting the height of the barcode
101	GS k	Printing a barcode
102	GS p	Settings for 2D barcode PDF417
103	GS q	Selecting the height of the module of 2D barcode PDF417
104	GS w	Selecting the horizontal size (Scale factor) of the barcode
105	GS x	Direct text print in page mode
106	FS !	Specifying printing mode of two-byte text data
107	FS &	Selecting two-byte text mode (JIS or GB2312)
108	FS -	Selecting/Canceling underline mode for two-byte text mode
109	FS .	Canceling two-byte text mode
110	FS C	Selecting Shift-JIS mode (Japanese version only)
111	FS S	Specifying character spacing for two-byte text mode
112	FS W	Selecting double size characters for two-byte text mode
113	ESC y WAN	WAN

5.11 Connecting Device

The DPP-450 is designed to use different methods of communications. Care must be taken to ensure that the DPP-450 USB/RS 232 connector and PDA & Smartphone connector are not accidentally damaged. The figures below show how to attach the different device to the DPP-450.

USB (Cabled) Version:

Connect the DPP-450 using Mini USB cable is shown in the figure below.

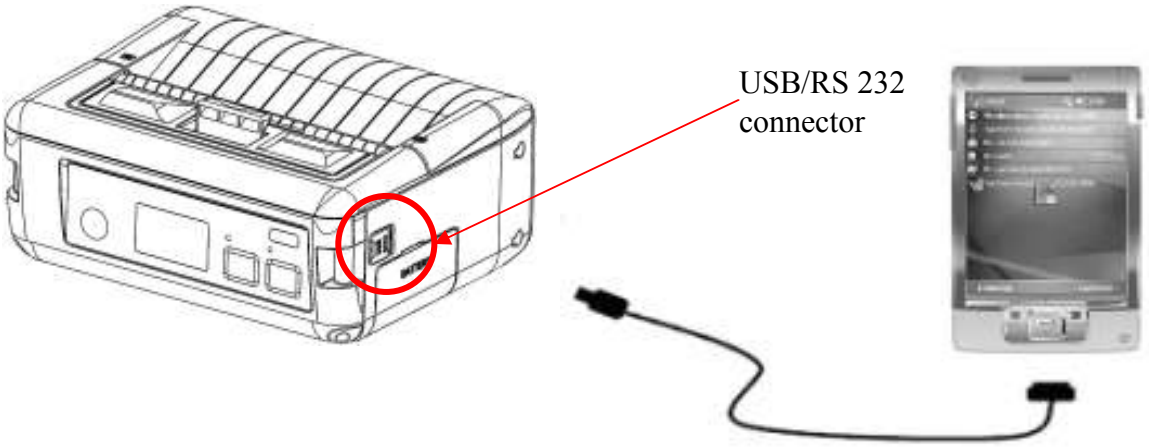

Bluetooth version:

The DPP-450 Bluetooth version uses Bluetooth® wireless technology to connect to Bluetooth enable devices.

iOS devices:

Connect to LineaTAB.

Start – LibraryDemo on iPad. Connect LineaTab to iPad(Figure 4). After this press settings button.

Turn on DPP-450 Bluetooth printer. From setting menu press Discover printers, and wait to find printers. When is found press on selected printer and wait connect.

ECS/POS Ready

BTH

On DPP-450 LCD screen is show message “BTH”, when is connected.
Press on LineaTAB “Print “ button:

On “Print” menu can printing via Bluetooth connection:

- Print Self-test
- Demo fonts
- Demo barcodes
- Demo graphics

To terminate the BT connection, press settings menu and name of printer. When is close connection the “tick” will disappearing.

5.12 Mount Strap

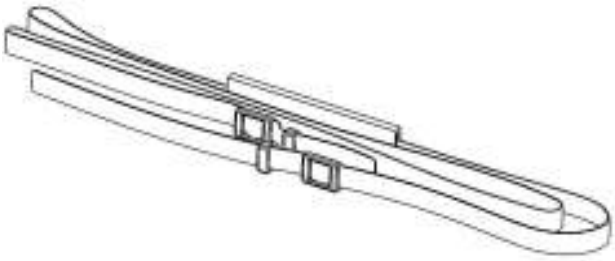
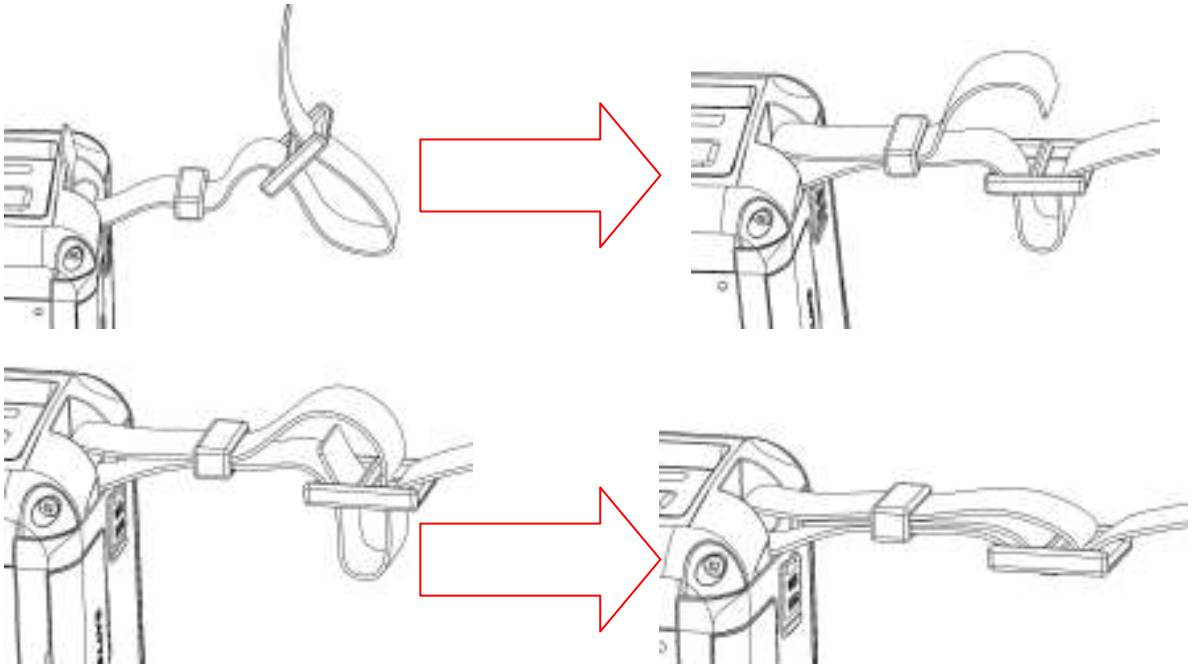
Strap