ENERGYA CRT-D 3711

IMPLANT MANUAL

Implantable cardioverter defibrillator with cardiac resynchronization therapy CRT-D 3711 model

MicroPort

Intended audience

This manual is intended for use by professionals trained or experienced in device implant and/or follow-up procedures.

Training for users

The following instructions for use are for informational purpose only. Each medical professional is responsible for their medical training and experience and should apply the following instructions according to the best clinical practices and patient condition.

ENERGYA CRT D - DF1/IS-1

Reminder

Battery depletion

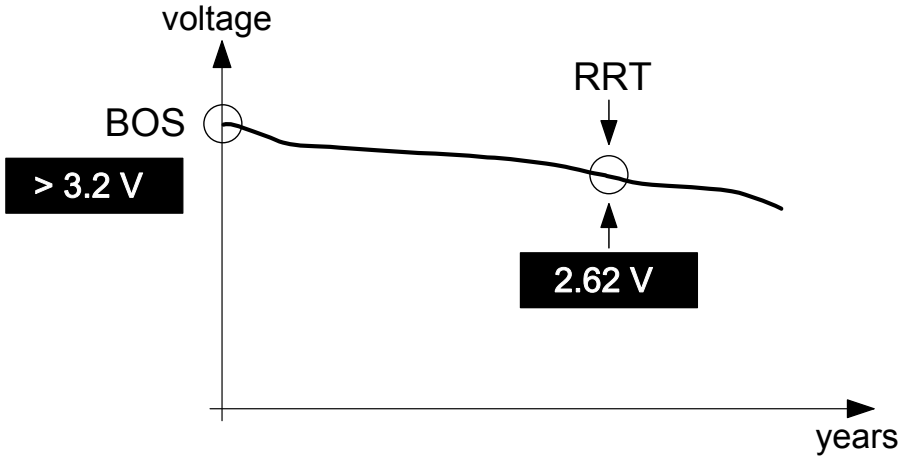

Leads connection - ENERGYA CRT-D 3711 model - DF1/IS-1

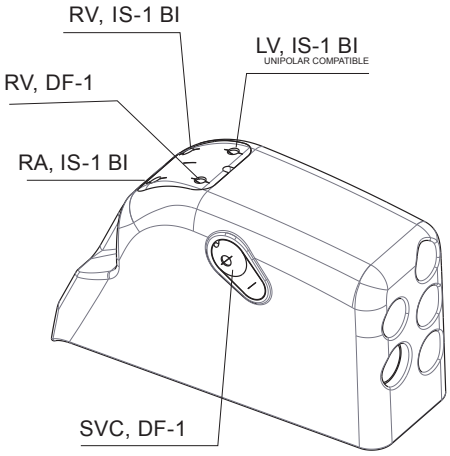

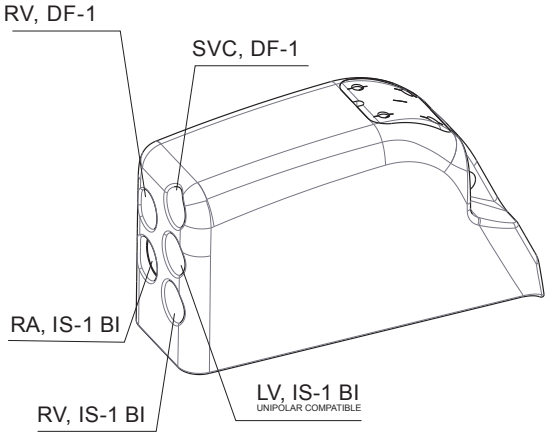

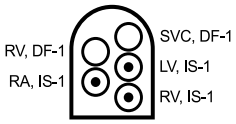

TABLE OF CONTENTS

1. GENERAL DESCRIPTION AND COMPATIBLE DEVICES ... 8

2. INTENDED PURPOSE AND TARGETED POPULATION ... 10

2.1. Intended purpose ... 10

2.2. Indications ... 10

2.3. Targeted population ... 10

2.4. Intended users ... 11

3. CONTRAINDICATIONS ... 12

3.1. Contraindication for patient implantation ... 12

3.2. Contraindication for use under medical environments ... 12

3.3. Adverse events, risks and side-effects ... 12

4. WARNINGS AND PRECAUTIONS ... 15

4.1. Warnings to patients ... 15

4.2. Risks related to medical environment ... 16

4.3. Sterilization, storage and handling ... 18

4.4. Implantation and device programming ... 18

4.5. Lead evaluation and lead connection ... 19

4.6. Generator explant and disposal ... 20

5. ADVERSE EVENTS ... 21

5.1. MSP study ... 21

6. CLINICAL STUDIES ... 23

6.1. MSP clinical study ... 23

7. PATIENT INFORMATION ... 27

8. PATIENT SELECTION AND TREATMENT ... 28

8.1. Individualization of treatment ... 28

8.2. Specific patient populations ... 28

9. PATIENT COUNSELING INFORMATION ... 30

10. DECLARATION OF CONFORMITY ... 31

11. PHYSICIAN GUIDELINES ... 32

11.1. Physician training ... 32

11.2. Directions for use ... 32

11.3. Maintaining device quality ... 32

11.4. V-V Programming Recommendation ... 33

12. HOW SUPPLIED ... 34

12.1. Sterility ... 34

12.2. Warranty and replacement policy ... 34

13. DEVICE DESCRIPTION ... 35

14. IMPLANT PROCEDURE ... 37
14.1. Necessary equipment ... 37
14.2. Packaging ... 37
14.3. Optional equipment ... 38
14.4. Opening the package ... 38
14.5. Prior to implantation ... 39
14.6. Device placement ... 39
14.7. Choosing the type of lead ... 40
14.8. Shock configuration (+ -> -) ... 40
14.9. Measurement of thresholds at implant ... 41
14.10. Leads connection ... 41
14.11. Device implantation ... 43
14.12. Tests and programming ... 43
15. SPECIAL MODES ... 44
15.1. MRI mode ... 44
15.2. Safety mode (nominal values) ... 44
15.3. Magnet mode ... 44
15.4. Response in the presence of disturbance ... 45
15.5. Detection characteristics in the presence of electromagnetic fields ... 45
15.6. Protection against short-circuits ... 45
16. MAIN FUNCTIONS ... 47
16.1. Automatic lead measurements ... 47
16.2. Automatic Pacing Threshold Adaptation ... 47
16.3. Atrial tachyarrhythmia management ... 48
16.4. Ventricular tachyarrhythmia management ... 48
16.5. Pacing ... 49
16.6. Sensing ... 50
16.7. Rate response ... 50
16.8. Lead Parameters Evaluation (LPE) ... 51
16.9. Left ventricular triggered pacing on right ventricular sensing ... 52
16.10. Electrophysiological study (EPS) ... 52
16.11. Follow-up function ... 52
16.12. Remote Monitoring function ... 53
17. PATIENT FOLLOW-UP ... 56
17.1. Follow-up recommendations ... 56
17.2. Holter Function ... 56
17.3. Recommended Replacement Time (RRT) ... 57
17.4. Explantation ... 58
17.5. Defibrillator identification ... 58
18. SUPPLEMENTAL INFORMATION ... 60

18.1. Adverse events in the SafeR (AAI <> DDD) study 60
18.2. SafeR (AAI <> DDD) clinical study 60
19. PHYSICAL CHARACTERISTICS 63
19.1. Materials used 63
20. ELECTRICAL CHARACTERISTICS 64
20.1. Table of delivered shock energy and voltage 64
20.2. Battery 65
20.3. Longevity 65
20.4. Radio equipment emission 67
20.5. Conformity to standards for safety and electromagnetic compatibility 67
21. PROGRAMMABLE PARAMETERS 68
21.1. Antibradycardia pacing 68
21.2. Ventricular tachyarrhythmia detection 74
21.3. Ventricular tachyarrhythmia therapies 75
21.4. Remote alerts and warnings 78
22. NON PROGRAMMABLE PARAMETERS 81
23. LIMITED WARRANTY 82
24. PATENTS 83
25. EXPLANATION OF SYMBOLS 84

1. GENERAL DESCRIPTION AND COMPATIBLE DEVICES

ENERGYA CRT-D is an implantable cardioverter defibrillator for the recognition and treatment of ventricular tachycardia and fibrillation, with ventricular resynchronization, in patients with spontaneous or inducible tachyarrhythmias.

The device equipped with an accelerometer to allow adaptation of pacing to suit the patient's activity.

The device can be programmed and interrogated with a compatible MicroPort dedicated programmer, using a compatible MicroPort dedicated programming head for bi-directional telemetry.

For detailed information about the compatibility of programming devices and implantable patient devices, please refer to the Device-Compatibility-Matrix that is available at www.microportmanuals.com.

This device features Bluetooth®[(1)] Low Energy (BLE) wireless technology which enables:

— Remote monitoring of patients who have the compatible MicroPort SMARTVIEW CONNECT Monitor installed at home,
— wireless interrogation and device programming by a compatible MicroPort SMARTTOUCH programmer.

Data communication security:

Bluetooth communication system

Data including sensitive information is encrypted by the device before it is sent over the BLE channel.

Inductive telemetry communication system

The MicroPort CRM inductive telemetry communication system (used by the SMARTTOUCH programmer for the device interrogation and programing) uses short-range communication that protects sensitive information such as patient and device data.

Lead system:

The lead system used with this device must provide sensing, pacing to the right ventricle, appropriate defibrillation to the heart, pacing to the left ventricle, sensing and pacing to the right atrium. The lead-device system compatibility is verified with MicroPort leads but has not been tested with non-MicroPort leads. Using non-MicroPort leads may lead to adverse events including oversensing or undersensing of cardiac activity, potentially leading to inappropriate therapy delivery. It is recommended to check the leads user's manual, especially in the case of leads with new technologies.

Devices and compatible lead connections are listed in the table below:

3711 Model
Atrium: IS-1 bipolar. Right ventricle: IS-1 bipolar, 2*DF-1. Left ventricle: IS-1 bipolar (unipolar compatible).

Therapeutic and diagnostic functions:

The device provides a range of therapeutic and diagnostic functions:

— high energy shocks
— atrial tachyarrhythmia prevention
— automatic lead measurements
— advanced diagnostic functions
— automatic adjustment of atrial an right ventricular sensitivities
— automatic adjustment of atrial, right and left ventricular pacing (autothresholds)
— automatic lead measurements to monitor system integrity

Usage environment:

The device is intended to be used in the following environments:

— In-clinic for implantation and post-surgical patient follow-up;
— After implantation, patient can resume a normal life considering restriction provided in the patient information booklet;
— During MRI examination[2] under the considerations described in MRI Solutions addendum available on www.microportmanuals.com.

[1]*The Bluetooth® word mark is a registered trademark of Bluetooth SIG, Inc. Any use of the word mark by MicroPort CRM is under license.*

[2]*For this model, MRI is contraindicated.*

2. INTENDED PURPOSE AND TARGETED POPULATION

2.1. INTENDED PURPOSE

Intended medical purpose of ENERGYA CRT-D:

ENERGYA CRT-D is an implantable cardiac resynchronization therapy defibrillators (CRT-D) used in combination with pacing and defibrillating leads.

The devices sense and record the electrical activity of the patient's heart using the electrodes of the implanted atrial and ventricular leads and analyze the heart rhythm based on selectable detection parameters. The devices provide simultaneous or sequential biventricular pacing using a LV electrode, and automatically detect ventricular tachyarrhythmias (VT/VF) and provide treatment with defibrillation, cardioversion, and antitachycardia pacing therapies through the delivery of shocks and electrical impulses. The devices also respond to bradycardia by providing atrial and/or ventricular pacing.

Intended purpose of the DF-1 Plug:

The DF1-Plug is an accessory of MicroPort CRM defibrillators intended to close the right ventricular port dedicated to superior vena cava coil when needed.

Intended purpose of the Screwdriver:

The screwdriver is a non-implantable accessory of MicroPort CRM pacemaker, defibrillator or resynchronisation therapy device. It is intended to tighten (untighten) the lead connector inside the header of the implantable device with screws, during implantation (explantation) procedure.

2.2. INDICATIONS

ENERGYA CRT-D is indicated for ventricular antitachycardia pacing and ventricular defibrillation for automated treatment of life threatening arrhythmias.

The device is also indicated for the reduction of heart failure symptoms in medically optimized NYHA Functional Class III and IV patients with left ventricular ejection fraction of 35% or less, and a QRS duration of 150 ms or longer.

For further details please refer to “2008 ACCF/AHA/HRS Guidelines for Device-Based Therapy of Cardiac Rhythm Abnormalities” and its 2012 Focused Update or “2017 AHA/ACC/HRS Guidelines for management of patients with ventricular arrhythmias and the prevention of sudden cardiac death” or “2022 ESC Guidelines for management of patients with ventricular arrhythmias and the prevention of sudden cardiac death”.

For biventricular pacing therapy, please also refer to “2021 ESC Guidelines on cardiac pacing and cardiac resynchronization therapy”.

2.3. TARGETED POPULATION

The population targeted for the device is the patient population for which the device is indicated excluding the pediatric patients.

Particular care should be taken with the implantation of devices in pregnant women with respect to the imaging technology used during the implant procedure.

2.4. INTENDED USERS

The intended users are professionals trained or experienced in device implant and/or follow-up procedures.

3. CONTRAINDICATIONS

3.1. CONTRAINDICATION FOR PATIENT IMPLANTATION

Implantation of ENERGYA CRT-D are contraindicated in patients:

— whose ventricular tachyarrhythmias may have transient or reversible causes such as: acute myocardial infarction, digitalis intoxication, drowning, electrocution, electrolyte imbalance, hypoxia, sepsis, or unstable ischemic episodes,

— who present incessant tachyarrhythmia,

— who have an internal pacemaker,

— whose primary disorder is bradyarrhythmias, or atrial tachyarrhythmias.

The use of the dual-chamber pacing mode is contraindicated in patients with chronic refractory atrial tachyarrhythmias.

3.2. CONTRAINDICATION FOR USE UNDER MEDICAL ENVIRONMENTS

Magnetic Resonance Imaging:

MRI is contraindicated.

Internal pacemaker:

Use of the defibrillator is contraindicated in cardiac implantable pacemaker patients.

Radiation therapy:

Betatrons are contraindicated.

3.3. ADVERSE EVENTS, RISKS AND SIDE-EFFECTS

Based on the literature and on pulse generator and/or lead implant experience, the following list includes the possible adverse events associated with implantation of CRT-D systems:

Events	Possible adverse effects
	Procedure related
Clotting disorder	Pocket hematoma, bleeding, formation of clots, may necessitate reintervention
Contamination, inflammation	Pocket infection, endocarditis, septicaemia may become necessary to perform surgical intervention, to remove the device and/or the lead
Fibrotic tissue formation	Pain, risk of hematoma and infection at the time of replacement
Introduction of air (with subclavian approach)	Air embolism
Poor lead/defibrillator connection	Intermittent or continuous loss of pacing and/or sensing
Use of contrast media used to visualize coronary veins	Allergic reaction, renal failure
Others	Adverse reaction to the procedure
	Pneumothorax linked to subclavian access
	Thrombosis

Events	Possible adverse effects
	Thrombotic embolism
	Venous occlusion
	Venous trauma (e.g., perforation, dissection, erosion, rupture)
	Tissue necrosis
Pocket related	
Clotting disorder	Pocket hematoma, bleeding, formation of clots, may necessitate reintervention
Contamination, inflammation	Pocket infection, endocarditis, septicaemia may become necessary to perform surgical intervention, to remove the device and/or the lead
Fibrotic tissue formation	Risk of hematoma and infection at the time of replacement
Skin erosion by the defibrillator with possible protrusion/extrusion of the casing	Generally linked to infection and/or hematoma, necessitates re-intervention and to change the site of implantation
Others	Venous trauma (e.g., perforation, dissection, erosion, rupture)
	Tissue necrosis
Device related	
Casing migration	Pain, discomfort
Component failure	Complications and mortality due to inability to detect arrythmia and to deliver appropriate and intended therapy, surgical intervention to remove/replace the device
Failure to convert an induced arrhythmia	Life-threatening arrhythmia
Myopotential sensing	Oversensing
Sensing circuit inhibition, reversion to backup mode, or other failures due to electromagnetic interference	Inappropriate functioning
Others	Tachyarrhythmmias, which include acceleration of arrythmias (caused by the device) and early, recurrent atrial fibrillation
Leads related	
Arrhythmia at implantation	Extrasystoles, tachycardia, ventricular/atrial fibrillation
Cardiac perforation	Intermittent or continuous loss of pacing and/or sensing
	Muscle or phrenic stimulation
	Cardiac tamponade, fluid accumulation
Conductor coil fracture	Inability to pace, sense, defibrillate
Contamination, inflammation	Pocket infection, endocarditis, septicaemia may become necessary to perform surgical intervention, to remove the device and/or the lead
Coronary sinus dissection	Pericardial effusion, hemothorax
Lead displacement, migration, conductor fracture or incorect lead implantation	Intermittent or continuous loss of pacing and/or sensing
Lead insulation rupture or abrasion	Pectoral and other muscular stimulation, sudden fall in impedance, loss of efficacy of pacing, early battery depletion
Lead tip deformation and/or breakage by overtorquing	Intermittent or continuous loss of pacing and/or sensing

Events	Possible adverse effects
Myocardial trauma	Chest pain, cardiac wall perforation, arrhythmias, formation of clot at injury site, bleeding, embolism, pericardial effusion or rub, endocarditis
Threshold elevation	Loss of capture
Phrenic Stimulation	Pain, discomfort
Others	Heart block
	Valvular damage
	Tachyarrhythmmias, which include acceleration of arrythmias (caused by the device) and early, recurrent atrial fibrillation
General	
Frequent shocks	Psychological intolerance to an ICD system (despite medical management): - Dependency - Depression - Fear of premature battery depletion - Fear of shocking while conscious - Fear that shocking capability may be lost - Imagined shocking (phantom shock) - Fear of device malfunction
Inappropriate therapy (e.g., shocks and antitachycardia pacing [ATP] where applicable, pacing)	Psychological intolerance to an ICD system (despite medical management): - Dependency - Depression - Fear of premature battery depletion - Fear of shocking while conscious - Fear that shocking capability may be lost - Imagined shocking (phantom shock) - Fear of device malfunction
Shock	Pain experienced during or after delivery of therapy
Others	Cardiac death
	Electrolyte imbalance/dehydration
	Pain, inesthetic scar
	Vasovasal syncope
	Stroke
	Worsening heart failure
Long term	
Prolonged exposure to fluoroscopic radiation	*No data available*

NOTE: Any serious incident in relation to the device should be reported to MicroPort CRM and the local Competent Authority.

4. WARNINGS AND PRECAUTIONS

4.1. WARNINGS TO PATIENTS

The patient should be warned of the potential risks of defibrillator malfunction if exposed to external magnetic, electrical, or electromagnetic signals.

These potential interference sources may cause conversion to inhibited mode (because of noise detection), erratic delivery of VT or VF therapies, nominal programming, or much more rarely, irreversible damage to the device's circuits.

The main sources of high magnitude disturbance are: powerful radiofrequency equipment (radar), industrial motors and transformers, induction furnaces, resistance welding / arc-welding equipment and high power loudspeakers.

Electrical Isolation:

Do not permit the patient to contact grounded equipment that could produce hazardous leakage current. Ensuing arrhythmia induction could result in the patient's death.

Electronic Article Surveillance (EAS) and RadioFrequency IDentification equipment (RFID)

Patients should be advised to walk directly through and not lean against or linger near Electronic Article Surveillance (EAS) systems such as retail theft prevention systems, security gates, entry control systems, or tag readers including Radio Frequency IDentification equipment (RFID). These systems may be found at the entrances and exits of stores, libraries, banks, etc...and may interact with pulse generators. It is unlikely that these systems affect cardiac function when the patient walks through them at a normal pace. If patients do experience symptoms near these systems, they should promptly move away and inform their doctor.

Work environment:

The patient's work environment may be an important source of disturbances. In that case, specific recommendations may be required.

High voltage power transmission lines:

High voltage power transmission lines may generate enough disturbances to interfere with defibrillator operation if approached too closely.

Communication equipment:

Communication equipment such as microwave transmitters, linear power amplifiers, or high-power amateur transmitters may generate enough disturbances to interfere with defibrillator operation if approached too closely.

Home appliances:

Home appliances that are in good working order and properly grounded do not usually produce enough disturbances to interfere with defibrillator operation. However, there are reports of device interferences caused by electric hand tools or electric razors used directly over the device implant site. Patient should also avoid using induction ovens and cookers.

Pressure variations:

Repeated exposure to pressure variations are not recommended outside the following limits:

— skin diving (diving to a depth of 10 m (33ft) max, equivalent to 2 ATA),

— scuba diving (diving to a depth of 20 m (66 ft) max, equivalent to 3 ATA),

— hiking, skiing or driving to high altitude (up to 4 267 m (14 000 ft) max),

NOTE: Air travel in pressurized aircrafts is allowed (typical cabin pressurization is equivalent to 2 438 m (8 000 ft)).

Wireless devices:

The functioning of the implant can be disturbed when a wireless device emitting radiofrequency or magnetic field is placed in its vicinity. It is recommended to maintain a minimum distance of 15 cm (6 inches) between both.

CAUTION: Do not tap sharply on the ICD can after implant, because the ICD's sensing circuits can detect this as P-waves or R-waves, and such oversensing could result in inappropriate pacing, inhibition, or therapy. Normal activities after implant do not result in such oversensing.

4.2. RISKS RELATED TO MEDICAL ENVIRONMENT

It is advisable to carefully monitor defibrillator operation prior to and after any medical treatment/procedure during which an electrical current from an external source passes through the patient's body or the patient body is exposed to external electromagnetic radiation.

Radiofrequency ablation:

A radiofrequency ablation procedure in a patient with a generator may cause device malfunction or damage. RF ablation risks may be minimized by:

1. Deactivating ATP and shock therapies.

2. Avoiding direct contact between the ablation catheter and the implanted lead or generator.

3. Positioning the ground, placing it so that the current pathway does not pass through or near the device, i.e. place the ground plate under the patient’s buttocks or legs.

4. Having external defibrillation equipment available.

Electrocautery or diathermy device:

Diathermy and electrocautery equipment should not be used. If such devices must be used:

1. Keep the current path and ground plate as far away from the device and the leads as possible (a minimum of 15 cm [6 inches]).

2. Before procedure, deactivate ATP and shock therapies.

3. During the procedure, keep the electrocautery device as far as possible from the cardiac defibrillator. Set it at minimum intensity. Use it briefly.

4. After the procedure, check for proper implant function. The device should never be exposed directly to the diathermy source.

Left Ventricular Assistant Device (LVAD):

When implanting an ICD in a patient implanted with a LVAD, it is recommended to place the device as far as possible from the LVAD, as the LVAD may disturb device interrogation. When interrogating the device the programmer head should be kept as far away from the LVAD as possible.

External defibrillation:

The device is protected from external defibrillation shocks.

1. Before external defibrillation, deactivate ATP and shock therapies.

2. During external defibrillation, it is advisable to avoid placing the defibrillating paddles directly over the casing or over the leads. The defibrillating paddles should preferably be placed in an anteroposterior position.

3. Avoid any direct contact between the defibrillation paddles and the conductive parts of the implanted leads or casing of the implanted device.

4. After external defibrillation, check for proper device function.

Radiation therapy:

Avoid exposure to ionizing radiation. If high doses of radiation therapy cannot be avoided, the defibrillator should be protected from direct exposure with a protection shield. ATP and shock therapies should be disabled during exposure and proper device function should be checked regularly afterwards. Resulting damage may not be immediately detectable. If irradiation of tissues close to the implantation site is necessary, it is recommended that the cardiac defibrillator be moved. As a safety measure, an external defibrillator should be immediately available.

Lithotripsy:

Lithotripsy may permanently damage the device if it is at the focal point of the lithotripsy beam. If lithotripsy must be used, keep the defibrillator at least 2.5 to 5 cm (1-2 inches) away from the focal point of the lithotripsy beam.

Diagnostic ultrasound (echography):

The defibrillator is not affected by ultrasound imaging devices.

Transcutaneous Electrical Nerve Stimulation (TENS):

TENS may interfere with defibrillator function. If necessary, the following measures may reduce interference:

1. Place the TENS electrodes as close together as possible and as far as possible from the pulse generator and leads.

2. Monitor cardiac activity during TENS use.

Scales with body fat monitors and electronic muscle stimulators:

A patient with an implanted ENERGYA CRT-D should not use these devices.

Surgical procedure:

For safety reasons, it is preferable to turn OFF Rate Response prior to any surgical procedure on the defibrillator patient.

Hyperbaric or hyperoxia therapy:

Elevated pressures due to hyperbaric or hyperoxia therapy may damage the pulse generator when above 3.0 ATA (300 kPa). Under simulated conditions, tests have shown the device is able to deliver continuous pacing. Shock delivery was not part of the scope.

4.3. STERILIZATION, STORAGE AND HANDLING

Resterilization:

Do not resterilize and re-implant explanted ICDs.

"Use by" Date:

A "Use by" date is printed on the outer storage package and on the sterile package. Do not implant the device after this date because the battery may have reduced longevity and sterility may be affected. It should be returned to MicroPort.

If package is damaged:

Do not use the device or accessories if the packaging is wet, punctured, opened or damaged because the integrity of the sterile packaging may be compromised. Return the device to the manufacturer.

Device Storage:

Store the device in a clean area, away from magnets, kits containing magnets, and sources of electromagnetic disturbance to avoid device damage. Store the device between 0 - 50 °C (32 - 122 °F). Temperatures outside the specified range may damage the device.

Equilibration:

Allow the device to reach room temperature before programming or implanting the device because rapid temperature changes may affect initial device function.

4.4. IMPLANTATION AND DEVICE PROGRAMMING

Use only a MicroPort programmer to communicate with the device.

Do not inadvertently position any magnet over the ICD; this suspends tachyarrhythmia detection and treatment.

Replace the device when the RRT (Recommended Replacement Time*) point (defined by a battery voltage of 2.62 ± 0.01 V) is reached.

Program device parameters such as sensitivity threshold and VT and VF detection intervals as specified in the device manuals.

Lead System:

Do not use a lead system other than those with demonstrated compatibility because undersensing cardiac activity and failure to deliver necessary therapy may result.

In situations where an ICD and a pacemaker are implanted in the same patient, interaction testing should be completed. If the interaction between the ICD and the pacemaker cannot be resolved through repositioning of the leads or reprogramming of either the pacemaker or the ICD, the pacemaker should not be implanted (or should be explanted if previously implanted).

Failure to properly insert the torque screwdriver into the perforation at an angle perpendicular to the connector receptacle may result in damage to the sealing system and its self-sealing properties.

In the event of a warning on low shock impedance, and after lead replacement or reconnection: it is recommended to check the system integrity (sensing and pacing thresholds and the impedance of the shock electrodes)

It is recommended that a safety margin of at least 10 J be demonstrated between the effective shock energy and maximum programmable energy. Carefully confirm that true ventricular

fibrillation has been induced because the DFT for ventricular tachycardia or flutter may be lower.

The defibrillator should be implanted with the engraved side facing outwards in order to facilitate telemetric communication with the programming head and to display the radiographic identification correctly.

*: corresponds to ERI (Elective Replacement Indicator) previously used.

4.5. LEAD EVALUATION AND LEAD CONNECTION

ENERGYA CRT-D has two DF-1 and three IS-1 connector ports.

IS-1 refers to the international standard whereby leads and generators from different manufacturers are assured a basic fit (ISO 5841-3:2013).

DF-1 refers to the international standard for defibrillation lead connectors (ISO 11318:2002).

Do not tie a ligature directly to the lead body, tie it too tightly, or otherwise create excessive strain at the insertion site as this may damage the lead. Use the lead stabilizer to secure the lead lateral to the venous entry site.

Do not immerse the leads in mineral oil, silicone oil, or any other liquid.

Do not grip the lead with surgical instruments.

Do not use excessive force or surgical instruments to insert a stylet into a lead.

Use ventricular transvenous leads with caution in patients with either a mechanical or bioprosthetic tricuspid valvular prosthesis.

Use the correct suture sleeve (when needed) for each lead, to immobilize the lead and protect it against damage from ligatures.

Never implant the system with a lead system that has a measured shock impedance of less than 30 ohms. A protection circuit in the defibrillator prevents shock delivery when impedance is too low. If the shock impedance is less than 30 ohms, reposition the lead system to allow a greater distance between the electrodes.

Do not kink leads. Kinking leads may cause additional stress on the leads, possibly resulting in lead fracture.

Do not insert a lead connector pin into the connector block without first visually verifying that the setscrews are sufficiently retracted. Do not tighten the setscrews unless a lead connector pin is inserted because it could damage the connector block.

Lead electrodes in contact during a cardioversion or defibrillation therapy will cause current to bypass the heart, possibly damaging the ICD and the leads. While the ICD is connected to the leads, make sure that the metal portions of any electrodes do not touch each other.

If a pacing lead is abandoned rather than removed, it must be capped to ensure that it is not a pathway for currents to or from the heart.

If a thoracotomy is required to place epicardial patches, it should be done during a separate procedure to reduce the risk of morbidity and mortality.

Do not place the patch lead over nerve tissue as this may cause nerve damage.

Place the patch lead with the conducting coil side facing the heart to ensure delivery of energy to the heart.

Place the sutures well outside the coil of the patch lead or in the area between the coils to avoid possible coil fracture.

If counter shock is unsuccessful using external paddles, adjust the external paddle position (e.g., anterior-lateral to anterior-posterior) and be sure that the external paddle is not positioned over the patch.

Do not fold, alter, or remove any portion of the patch as it may compromise electrode function or longevity.

If a header port is unused on the generator, the port must be plugged to protect the generator.

4.6. GENERATOR EXPLANT AND DISPOSAL

Interrogate the device, and program shock therapy off prior to explanting, cleaning or shipping the device to prevent unwanted shocks.

Return all explanted generators and leads to the manufacturer.

Never incinerate the device due to the potential for explosion. The device must be explanted before cremation.

5. ADVERSE EVENTS

Clinical data presented in this section are from the MSP clinical study. ENERGYA CRT-D is similar in design and function to the ALTO 2 MSP and OVATIO CRT-D devices. The data provided are applicable to ENERGYA CRT-D.

5.1. MSP STUDY

MicroPort conducted an international, multi-center, randomized clinical trial of its cardiac resynchronization therapy system. Investigators attempted to implant study devices in 190 patients. A total of 182 patients received study devices and had an exposure of over 165 device years. Of those patients, 19 received OVATIO CRT-D, 160 received ALTO 2 MSP, and 3 received ALTO MSP. The clinical data collected on ALTO MSP, ALTO 2 MSP and OVATIO CRT-D are applicable to ENERGYA CRT-D. The table below summarizes the adverse events observed for the CRT-D system. No deaths were related to the system.

Event	# of Patients	% of Patients	# of Events	Events/100 Device-Years
Deaths not related to the system	**16**	**8.4**	**16**	**0.8**
Cardiac arrest	5	2.6	5	0.3
Worsening CHF / CHF decompensation	3	1.6	3	0.2
Multi-organ dysfunction	2	1.1	2	0.1
Complications related to the system	**28**	**14.7**	**35**	**2.1**
Dislodgment or migration	9	4.7	11	0.6
Extracardiac stimulation (e.g., phrenic stim)	9	4.7	9	0.5
Complications related to the implant procedure	**18**	**9.5**	**21**	**1.3**
Dislodgment or migration	4	2.1	4	0.2
Observations related to the system	**23**	**12.1**	**27**	**1.7**
Extracardiac stimulation (e.g., phrenic stim)	12	7.9	15	0.8
Observations related to the implant procedure	**24**	**12.6**	**28**	**1.7**
Heart block	6	3.2	6	0.3
Extracardiac stimulation (e.g., phrenic stim)	3	1.5	5	0.3
Serious adverse events not related to the system	**85**	**44.7**	**176**	**10.8**
Worsening CHF/CHF decompensation	24	12.6	42	2.1
Atrial fibrillation/flutter	14	7.4	14	0.7
Not Serious events not related to the system	**58**	**30.5**	**121**	**7.4**
Pain (in back, arms, chest, shoulder, groin, head, other)	10	5.3	13	0.7
Worsening CHF/CHF decompensation	13	6.8	16	0.8

Event	# of Patients	% of Patients	# of Events	Events/100 Device-Years
Atrial fibrillation/flutter	7	3.7	8	0.4
Ventricular tachycardia	7	3.7	7	0.4

6. CLINICAL STUDIES

Clinical data presented in this section are from the MSP clinical study. ENERGYA CRT-D is similar in design and function to the ALTO 2 MSP and OVATIO CRT-D devices. The data provided are applicable to ENERGYA CRT-D.

6.1. MSP CLINICAL STUDY

OVATIO CRT-D and earlier models were evaluated clinically in an international, multi-center, randomized clinical trial of MicroPort's cardiac resynchronization therapy (CRT-D) system. Investigators attempted to implant study devices in 190 patients. A total of 182 patients received study devices and had an exposure of over 165 device years. Of those patients, 19 received OVATIO CRT-D, 160 received ALTO 2 MSP, and 3 received ALTO MSP.

6.1.1. Objectives

The primary objectives of the study were to demonstrate:

— Greater improvement in a composite endpoint (percent improvement in peak VO_2 percent improvement in quality of life) for CRT-D patients than for control patients.

— System complication-free rate ≥ 67 % at six months.

6.1.2. Methods

Patients were New York Heart Association class III or IV and had one or more indications for an implantable cardioverter defibrillator (ICD). Patients performed cardiopulmonary exercise testing at baseline and six-months after randomization. Patients were implanted with an OVATIO or ALTO ICD/CRT-D, a Situs UW28D left ventricular lead, and commercially available right atrial and ventricular leads. Routine follow-ups were at pre-discharge, randomization (3-14 days post-implant), one month, three months, and six months post randomization.

6.1.3. Results

Improvement in composite endpoint

Patients were included in the analysis if complete (peak VO_2 and quality of life) baseline and six-month data were available.

Number of patients contributing to analysis	Mean percent improvement in composite endpoint for control group	Mean percent improvement in composite endpoint for CRT-D group	Percent greater improvement for CRT-D group	p-value
132	15.5 %	24.9 %	9.4 %	0.046

Six-month system complication-free rate

Number of patients contributing to analysis	Kaplan-Meier six-month complication-free estimate	One-sided lower 95% confidence bound for six-month complication-free estimate
190	89.5 %	84.1 %

6.1.4. Absolute Differences in Peak VO_2 and QOL

The tables below show the absolute differences between the control and test groups' peak VO_2 and QOL over the 6 month follow-up period in the clinical trial.

Absolute difference between test and control groups' change in peak $V0_2$ over 6 months

		Baseline Mean ± SD (range)	6-month Mean ± SD (range)	Difference within group	Difference between groups
Change in Peak VO2 (mL/min/Kg)	Control group (n=41)	13.39 ± 4.58 (5.02, 24.10)	13.12 ± 3.99 (3.30, 20.70)	- 0.28	1.85
	Test group (n=91)	11.84 ± 3.90 (3.50, 26.3)	13.41 ± 4.28 (6.18, 27.67)	1.57	

Absolute difference between test and control groups' change in QOL score over 6 months

		Baseline Mean ± SD (range)	6-month Mean ± SD (range)	Difference within group	Difference between groups
Change in QOL	Control group (n=41)	47.5 ± 19.29 (9, 90.3)	31.21 ± 23.96 (0, 95)	16.29	1.28
	Test group (n=91)	52.81 ± 21.84 (9, 92)	35.24 ± 23.73 (0, 93)	17.57	

The table below presents the percentage of patients in each group who improved, worsened, or remained unchanged in each element of the composite score and the composite score itself.

	QOL score		VO_2 Score		Composite Score	
	Control GROUP	Test GROUP	Control GROUP	Test GROUP	Control GROUP	Test GROUP
% Improved	75.6	74.7	48.8	67.0	62.2	70.9
% Worsened	24.4	25.3	51.2	31.9	37.8	28.6
% Unchanged	0.0	0.0	0.0	1.1	0.0	0.0

Histograms for Respiratory Exchange Rate (RER) at peak VO_2 at baseline and 6 month follow-up are provided below:

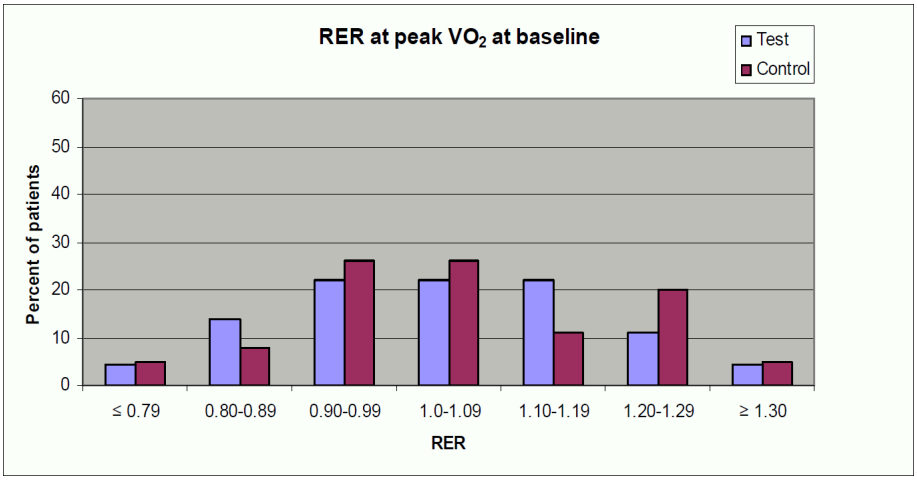

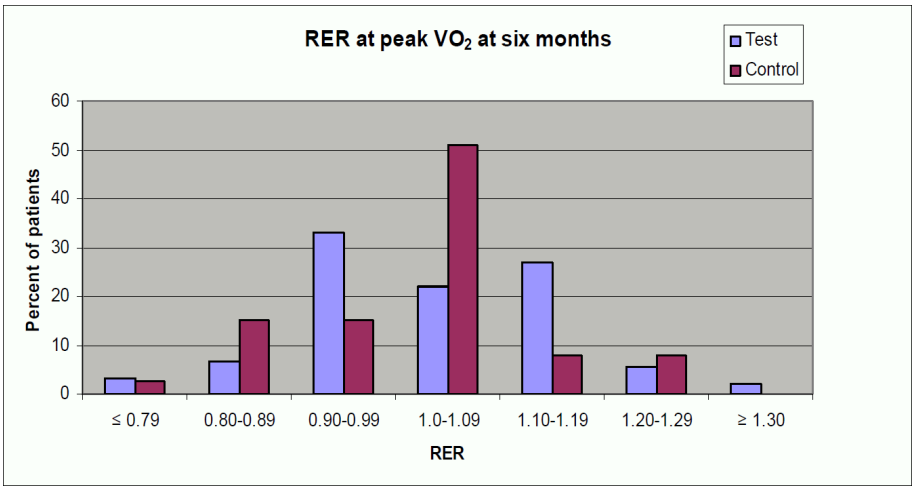

6.1.5. Clinical Results V-V timing

V-V programmable settings were available for the clinical study devices as follows: ALTO MSP model 617 (not programmable for V-V delay), ALTO 2 MSP model 627 values (0, 31, 39, 47, 55 and 63 ms) and OVATIO CRT-D 6750 values (0 to 63 ms in steps of 8 ms).

The graph below shows the programmed V-V settings at randomization by percentage of patients programmed to each combination of Synchronous BiV pacing and V-V delay.

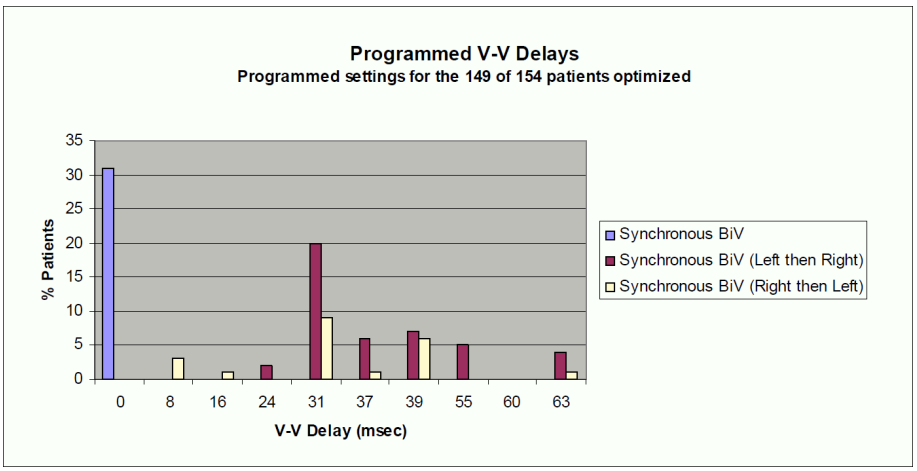

The optimization protocol in the clinical study specified that each patient randomized should undergo echo guided V-V optimization. Per the investigational plan for the MSP Clinical

Trial, a uniform protocol was used for V-V programming. This protocol required all patients to undergo echo-guided V-V delay optimization before randomization (2 to 14 days post-implant). The optimal V-V delay was determined by finding the programmable V-V delay and ventricular chamber pacing order (RV then LV, or LV then RV) providing the maximum time velocity integral (TVI or VTI) across the left ventricular outflow tract (LVOT).

Only those patients randomized to the Test arm were required to be programmed per the optimization protocol for the V-V delay.

Of the 177 patients that presented at randomization, 3 had Model 617 which does not have V-V programmability hence the inability to optimize. Of the remaining 174 patients, 154 (89%) were tested per the V-V optimization protocol. One hundred forty-nine (149) of the 154 patients who were tested per the V-V optimization protocol were programmed per the recommended or randomized V-V delay (97%). Thirty-one (31) patients were programmed to BiV synchronous (V-V delay 0ms), 46 were programmed to Sequential BiV (LV then RV), 22 were programmed to Sequential (RV then LV), and the remaining 50 patients were randomized to RV only.

A sub-analysis of the composite endpoint comparing the subset of CRT-D patients with optimized V-V delays vs. the subset of patients that did not undergo V-V delay optimization demonstrated similar results in both groups. The CRT-D patients who did not undergo V-V delay optimization showed a smaller improvement in the composite endpoint, although the sample size did not permit conclusions based on data from this subset.

7. PATIENT INFORMATION

Information for the patient is available in the patient booklet, contained in the outer storage package. Please inform him/her that the document is also available on the website: www.microportpatients.com, this web link is displayed on the device implant card.

Additional copies can be obtained by contacting your MicroPort representative.

This information should be given to each patient with their first ICD and offered to the patient on each return visit or as deemed appropriate.

8. PATIENT SELECTION AND TREATMENT

8.1. INDIVIDUALIZATION OF TREATMENT

Exercise stress testing:

If the patient's condition permits, use exercise stress testing to:

— Determine the maximum rate of the patient's normal rhythm,

— Identify any supraventricular tachyarrhythmias,

— Identify exercise-induced tachyarrhythmias.

The maximum exercise rate or the presence of supraventricular tachyarrhythmias may influence selection of programmable parameters. Holter monitoring or other extended ECG monitoring also may be helpful.

CAUTION: To avoid inappropriate therapy during an exercise stress test, do not reprogram any parameter during the test. When a parameter is reprogrammed, algorithm forces acceleration to "ventricular". During conducted sinus tachycardia within the programmed Tachy zone, the device detects a 1:1 fast rhythm. Assuming that acceleration was set to ventricular by reprogramming, the device may identify this as a VT, and may immediately apply the corresponding therapy.

Electrophysiologic (EP) testing:

EP testing may be useful for ICD candidates.

EP testing may identify the classifications and rates of all the ventricular and atrial arrhythmias, whether spontaneous or during EP testing.

Drug resistant supraventricular tachyarrhythmias (SVTs):

Drug resistant supraventricular tachyarrhythmias (SVTs) may initiate frequent unwanted device therapy.

A careful choice of programming options is necessary for such patients.

Antiarrhythmic drug therapy:

If the patient is being treated with antiarrhythmic or cardiac drugs, the patient should be on a maintenance drug dose rather than a loading dose at the time of ICD implantation. If changes to drug therapy are made, repeated arrhythmia inductions are recommended to verify ICD detection and conversion. The ICD also may need to be reprogrammed.

Changes in a patient's antiarrhythmic drug or any other medication that affects the patient's normal cardiac rate or conduction can affect the rate of tachyarrhythmias and/or efficacy of therapy.

Direct any questions regarding the individualization of patient therapy to MicroPort's representative.

8.2. SPECIFIC PATIENT POPULATIONS

Pregnancy:

If there is a need to image the device, care should be taken to minimize radiation exposure to the fetus and the mother.

Nursing Mothers:

Although appropriate biocompatibility testing has been conducted for this implant device, there has been no quantitative assessment of the presence of leachables in breast milk.

Pediatric Patients:

This device has not been studied in patients younger than 18 years of age.

Geriatric Patients:

Most of the patients receiving this device in clinical studies were over the age of 60 years.

Handicapped and Disabled Patients:

Special care is needed in using this device for patients using an electrical wheel chair or other electrical (external or implanted) devices.

9. PATIENT COUNSELING INFORMATION

The physician should consider the following points in counseling the patient about this device:

— Persons administering CPR may experience tingling on the patient's body surface when the patient's ICD system delivers a shock.

— Advise patients to carry MicroPort ID cards and/or ID bracelets documenting their ICD system.

10. DECLARATION OF CONFORMITY

Federal Communication Commission Interference Statement 47 CFR Section 15.19 and 15.105(b)

FCC ID: YSGIS1BLE

This FCC ID is applicable for ENERGYA CRT-D 3711.

ENERGYA pacemaker is featuring Bluetooth Low Energy communication capability. Using a standard Bluetooth Low Energy component not initially intended for use in life support applications, MicroPort CRM has fully qualified that Bluetooth Low Energy communication to comply with implantable medical devices intended use and safety requirements.

This equipment has been tested and found to comply with the limits for a Class B digital device, pursuant to Part 15 of the FCC Rules. These limits are designed to provide reasonable protection against harmful interference in a residential installation. This equipment generates, uses and can radiate radio frequency energy and, if not installed and used in accordance with the instructions, may cause harmful interference to radio communications. However, there is no guarantee that interference will not occur in a particular installation. If this equipment does cause harmful interference to radio or television reception the user is encouraged to try to correct the interference by one or more of the following measures:

— Reorient or relocate the receiving antenna of the radio or television.
— Increase the separation between the equipment and receiver.
— Consult the dealer or an experienced radio/TV technician for help.

This device complies with Part 15 of the FCC Rules. Operation is subject to the following two conditions: (1) This device may not cause harmful interference, and (2) this device must accept any interference received, including interference that may cause undesired operation.

FCC Interference Statement 47 CFR Section 15.21 - No Unauthorized Modifications

CAUTION:
This equipment may not be modified, altered, or changed in any way without signed written permission from MicroPort. Unauthorized modification may void the equipment authorization from the FCC and will void the MicroPort warranty.

Identification of the equipment according to Section 95.1217(a)

This transmitter is authorized by rule under the Medical Device Radiocommunication Service (in part 95 of the FCC Rules) and must not cause harmful interference to stations operating in the 400.150-406.00 MHz band in the Meteorological Aids (i.e., transmitters and receivers used to communicate weather data), the Meteorological Satellite, or the Earth Exploration Satellite Services and must accept interference that may be caused by such stations, including interference that may cause undesired operation. This transmitter shall be used only in accordance with the FCC Rules governing the Medical Device Radiocommunication Service. Analog and digital voice communications are prohibited. Although this transmitter has been approved by the Federal Communications Commission, there is no guarantee that it will not receive interference or that any particular transmission from this transmitter will be free from interference.

11. PHYSICIAN GUIDELINES

11.1. PHYSICIAN TRAINING

Physicians should be familiar with sterile pulse generator and left ventricular pacing lead implant procedures. They must apply these procedures according to professional medical training and experience.

Physicians should be familiar with follow-up evaluation and management of patients with an implantable defibrillator (or referral to such a physician).

This training guideline for implantation and follow-up of ICD and CRT-D devices comes from the Heart Rhythm Society to provide standards for hospital credentialing bodies to help ensure appropriate patient care and lead to improved patient outcomes. The following is a summary of requirements for an alternate training pathway for ICD and CRT-D implantations[(1)]:

— Documentation of current experience: 35 pacemaker implantations per year and 100 implantations over the prior 3 years
— Proctored ICD implantation experience: 10 Implantations, 5 Revisions
— Proctored CRT-D implantation experience: 5 implantations
— Completion of didactic course and/or IBHRE® ExAM
— Monitoring of patient outcomes and complication rates
— Established patient follow-up
— Maintenance of competence: 10 ICD and CRT-D procedures per year, 20 patients per year in follow-up

[(1)] Please consult full text of both publications for details. 2004 Heart Rhythm Society Clinical Competency Statement and the 2005 Addendum on Training Pathways for Implantation of Cardioverter Defibrillators and Cardiac Resynchronization Devices. Heart Rhythm (2004) 3, 371-375; Heart Rhythm.

11.2. DIRECTIONS FOR USE

ICD operating characteristics should be verified at the time of implantation and recorded in the patient file. Complete the *Patient Registration Form* and return it to MicroPort, as it provides necessary information for warranty purposes and patient tracking.

Additional programming instructions can be found by accessing Online Help (click the “?” on the screen) on the MicroPort dedicated programmer. Paper copies of Online Help can be obtained by contacting your MicroPort representative.

11.3. MAINTAINING DEVICE QUALITY

This device is **FOR SINGLE USE ONLY**. Do not resterilize and reimplant explanted ICDs.

Do not implant the device when:

— It has been dropped on a hard surface because this could have damaged pulse generator components.
— Its storage package has been pierced or altered, because this could have rendered it non-sterile.

— It has been stored or transported outside the environmental temperature limits: 32 °F (0 °C) to 122 °F (50 °C) as an electrical reset condition may occur.

— "Use by" date has expired, because this can adversely affect pulse generator longevity or sterility.

11.4. V-V PROGRAMMING RECOMMENDATION

It is recommended that V-V optimization testing be performed and used to set the V-V delay for this device in order to optimize the potential benefit to the patient.

12. HOW SUPPLIED

12.1. STERILITY

The ENERGYA defibrillators are supplied one per package in a sterile package.

12.2. WARRANTY AND REPLACEMENT POLICY

MicroPort warrants its defibrillators. Refer to the section "Warranty" for additional information. Please see the following labeling sections for information concerning the performance of this device: Indications, Contraindications, Warnings and Precautions, and Adverse Events.

13. DEVICE DESCRIPTION

The ENERGYA CRT-D ICD device and programming system. The programming system includes the MicroPort dedicated programmer[1] with the SmartTouch programming software connected to a CPR4 programming head. The programming system is configured and furnished by MicroPort.

The ENERGYA CRT-D is designed to recognize and treat slow or fast VT and VF by continuously monitoring atrial and ventricular activity to identify persistent ventricular arrhythmias and to deliver appropriate therapies. ENERGYA CRT-D features the PARAD/PARAD+ algorithm, which is specifically designed to differentiate ventricular tachycardias from fast rhythms of supraventricular origin. PARAD/PARAD+ continuously monitors R-R interval stability, searches for long cycles, assesses the degree of P-R association, evaluates sudden onset and determines the chamber of arrhythmia acceleration.

In addition to the advanced detection scheme, ENERGYA CRT-D offers programmable single, dual or triple-chamber pacing therapy (DDD, DDI, VVI or SafeR (AAI <> DDD) modes) with or without rate-responsive capabilities (DDDR, DDIR, VVIR, DDD/DDIR and SafeR-R (AAIR <> DDDR) modes) using an acceleration sensor. An automatic AV delay algorithm as well as a mode switching function are available.

ENERGYA CRT-D enables an adjustment of the interventricular delay, and provides the possibility of adapting pacing to each ventricle. The ICD is intended to resynchronize uncoordinated contraction of the heart by simultaneously or sequentially pacing both ventricles.

ENERGYA CRT-D offers tiered therapy. Therapies can be programmed independently in each zone:

- in the Slow VT and VT zones: two ATP programs, up to two shocks with programmable energy and up to four shocks with maximum energy can be programmed;
- in the VF zone: one ATP program, up to two shocks with programmable energy and up to four shocks with maximum energy can be programmed.

The ATP can be applied in RV, LV or RV and LV pacing with a VV delay equal to 0 ms. ATP pacing configuration is independent of ventricular pacing configuration.

When the rhythm changes from one zone to another, the device delivers the therapy programmed in this zone, starting with the same or more aggressive program for the zone. The ATP program in the VF zone will only be applied if the VT coupling interval is longer than the programmed fast VT cycle length.

The ENERGYA CRT-D offers biphasic shocks with a maximum stored energy of 42 J. The shock configuration (electrodes used to apply the shock) can be chosen by programming one of the following combinations: can and one coil, can and two coils, two coils only.

Other features are as follows:

- Automatic ventricular sensitivity control
- Non-committed shocks
- Electrophysiological studies (EPS) with real-time markers or electrograms:
  - Programmer-controlled VT induction sequences,
  - Programmer-controlled VF inductions (30 Hz rapid pacing or shock on T),
  - Real-time annotations displayed with the markers and indicating the majority rhythm,

  - Manual ATP sequences,
  - Manual shocks.
- Rescue shock
- Follow-up tests:
  - Pacing lead impedance,
  - Coil impedance,
  - Capacitor charge time,
  - Sensitivity test,
  - Pacing threshold tests.
- Data storage:
  - Therapy History Report,
  - Statistics (pace/sense, therapy, shocks, and battery voltage),
  - Up to 16 complete Holter records with event logs, marker channel notation, and electrogram records.

The ENERGYA CRT-D 3711 connector head has five ports:

- Atrial “IS-1” port: performs atrial bipolar pace/sense,
- RV “IS-1” port: performs right ventricular bipolar pace/sense,
- LV “IS-1” port: performs left ventricular pace,
- RV “DF-1” port for RV defibrillation coil,
- SVC “DF-1” port for SVC defibrillation coil.

Both pace/sense ports and the pace port are compatible with the IS-1 standard and both defibrillation ports are compatible with the DF-1 standard.

Distal lead terminal connections are secured with set-screws accessed via self-sealing silicone plugs. All lead connections pass through the header into the device via feedthroughs.

Programming System:

The MicroPort programmer is used in conjunction with specific programmer software to interrogate and program the implanted device at implant and during patient follow-up procedures.

Remote Monitoring:

ENERGYA CRT-D is also equipped with the wireless Bluetooth Low Energy communication technology which enables to remotely monitor the patients who have the MicroPort SMARTVIEW CONNECT monitor installed at home.

(1)*The software bill of materials is available upon request.*

14. IMPLANT PROCEDURE

14.1. NECESSARY EQUIPMENT

Implantation of the device requires the following equipment:

— MicroPort SMARTTOUCH programmer, equipped with the SMARTVIEW software interface and inductive telemetry head,

— pacing system analyzer, as well as its sterile connecting cables, to evaluate the pacing and sensing thresholds,

— a complete set of leads with corresponding introducers,

— physiological signal monitor capable of displaying simultaneously the surface ECG and arterial pressure,

— an external defibrillator with sterile external paddles,

— sterile cover for the telemetry head.

14.2. PACKAGING

14.2.1. Contents

ENERGYA CRT-D and its accessories are ethylene oxide sterilized and hermetically sealed in two-ply clear packaging meeting international requirements.

The sterile packaging contains:

— The defibrillator

— A ratcheting screwdriver intended to be used with the device only to tighten the set screws of the device header once the lead(s) pin(s) are inserted

— a DF-1 defibrillating connector insulating plug

As delivered, ENERGYA CRT-D are programmed to as-shipped values that are different from nominal values (see Chapter “Programmable Parameters” for details).

The non-sterile packaging contains:

— Leads connection leaflet

— Patient implant card

— Implant registration form

— Return envelope

— Patient booklet

— Website leaflet

14.3. OPTIONAL EQUIPMENT

The following equipment may be required during implantation of the device:

— an IS-1 insulating plug to close the atrial port

— Sterile water to clean traces of blood. Any parts cleaned with sterile water must be thoroughly dried

— Mineral oil to lubricate if necessary

— A lead cap to isolate a lead which is not used

14.4. OPENING THE PACKAGE

Before opening the package, check the "Use by" date printed on the labels on the box and on the sterile package. Defibrillators that have not been implanted by the end of the “Use by” date should be returned to MicroPort.

Interrogate the device:

— if a warning is displayed, do not implant the device and contact your MicroPort representative.

— if battery voltage is below 3V, and if the last reforming/charge occurred more than one week ago, do not implant the device. Otherwise, wait for one more week before checking the voltage.

NOTE : The battery voltage can decrease before the expiration date is reached. However, the battery voltage should be equal to or higher than 3V at the time of implant.

When using the inductive wand, devices MUST NOT be interrogated and/or programmed within the vicinity of other devices.

Also check the integrity of the sterile package. The sterility of the contents is no longer guaranteed if the package has been pierced or altered. If the defibrillator is no longer sterile, it should be returned in its packaging to MicroPort. Any re-sterilization of the unit is at the discretion of MicroPort.

Open the sterile package within the sterile field and carefully remove the device (see Figure – *Opening the sterile package*).

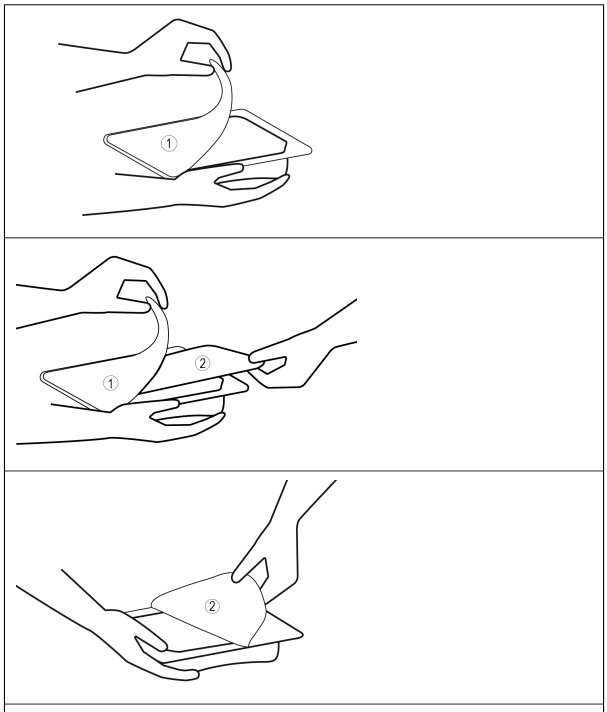

— 1-Non-Sterile
— 2-Sterile

Figure - Opening the sterile package

14.5. PRIOR TO IMPLANTATION

Use the programmer to verify the defibrillator can be interrogated before implantation.

Verify all shock therapies are disabled in order to avoid accidental discharge during implantation.

It is not advisable to program the Smoothing function before implantation, since the defibrillator may detect noise and pace at a rate higher than the programmed basic rate.

CAUTION:
Do not shake or tap sharply on the ICD package with the ICD inside, because the ICD's sensing circuits can interpret this as P-waves or R-waves and record these as an arrhythmia episode.

High voltage capacitors charge performed on ICD without connected leads using wireless telemetry can generate false P-waves or R-waves detection.

14.6. DEVICE PLACEMENT

The pocket should be prepared in the left pectoral position, either subcutaneously or submuscularly. Subcutaneous device implantation is recommended for optimal RF communication efficacy.

Implantation in an abdominal position is not advisable.

In its final position, the defibrillator should be no more than 4 cm (1.6 in) below the skin's surface.

14.7. CHOOSING THE TYPE OF LEAD

The defibrillator should be connected to:

— one bipolar atrial sensing/pacing lead

— one right ventricular lead with bipolar sensing/pacing electrodes and one or two defibrillation coils

— one unipolar or bipolar left ventricular pacing lead

The choice of lead(s) and their configuration is left to the implanting physician’s judgment.

The lead-device system compatibility is verified with MicroPort leads but has not been tested with non-MicroPort leads. Using non-MicroPort leads may lead to adverse events including oversensing or undersensing of cardiac activity, leading to inappropriate therapy delivery.

NOTE1: Please note that in the event of defibrillator replacement, DF4 standard compliant lead is not compatible with DF-1 connector. Choose the appropriate device compatible with DF-1 or DF4 leads. For any other lead type that requires an adaptor for this device, please contact your MicroPort representative for any information on lead / connector compatibility question.

NOTE2: In the event that no atrial lead is implanted, the atrial port should be plugged with IS-1 insulating plug and a single chamber mode (VVI-VVIR) should be programmed. PARAD and PARAD+ should not be used.

NOTE3: In the event of a warning on a low shock impedance, and after lead replacement or reconnection: it is recommended to check the system integrity (sensing and pacing thresholds and the impedance of the shock electrodes).

NOTE4: The use of a high polarization ventricular lead interferes with normal operation of the Ventricular Autothreshold function.

Connectors:

The pacing/sensing connectors are compatible with the IS-1 standard and the right ventricular defibrillation connectors are compatible with DF-1 standard.

14.8. SHOCK CONFIGURATION (+ -> -)

The shock configuration is the energy pathway between the defibrillation electrodes. If an atrial coil (SVC) is present, the shock configuration can be programmed for bi-directional shocks.

Programming:

When active case and atrial coil (SVC) are both programmed to Yes, the shock configuration can be programmed to:

— RV to Case (or Case to RV),

— or RV to SVC (or SVC to RV),

— or RV to Case+SVC (or Case+SVC to RV).

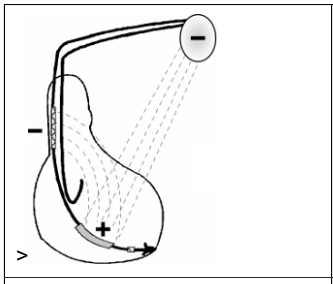	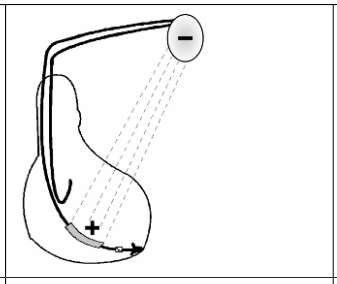	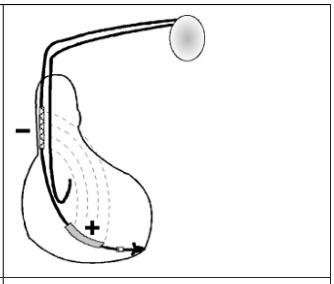
RV to Case+SVC	RV to Case	RV to SVC

The polarity of shock is determined by the parameter itself.

14.9. MEASUREMENT OF THRESHOLDS AT IMPLANT

Pacing and sensing thresholds and pacing impedances should be measured at implant. In case of values outside the indicative thresholds below, lead-connector compatibility should be further verified.

Pacing thresholds:

Acute thresholds should be lower than 1 V (or 2 mA) for a 0.35 ms pulse width, in the right ventricle and in the atrium.

Sensing thresholds:

For appropriate right ventricular sensing, the amplitude of the R-wave should be greater than 5 mV.

For appropriate atrial sensing, the amplitude of the P-wave should be greater than 2 mV.

Pacing impedance measurements:

Right ventricular, left ventricular and atrial pacing impedances should range from 200 to 3000 ohms (refer to the lead characteristics, especially if high impedance leads are used).

Please refer to the leads user manuals for more details on the expected electrical performances of the leads.

14.10. LEADS CONNECTION

Implant the ventricular leads, then the atrial lead.

Each lead must be connected to the corresponding connector port. The position of each connector is indicated on the casing.

CAUTION:

Tighten only the distal inserts.

To connect each lead, proceed as follows:

1. Clean the lead terminal pins thoroughly, if necessary (device replacement).
2. Lubricate the lead terminal pins with sterile water, if necessary.
3. Do not insert a lead connector pin into the connector block without first visually verifying that the lead port is not obstructed.
4. Insert the screwdriver into the pre-inserted screw socket of the appropriate port (in order to allow excess air to bleed out and to make the insertion of the lead pin easier).
5. Insert the lead pin all the way into the port (check that the pin protrudes beyond the distal connector block).
6. Tighten, check the tightness and ensure the lead pin still protrudes beyond the distal connector block, and has not moved.

CAUTION:

1. Do not tighten the pre-inserted screws when there is no lead (this could damage the connector).
2. Do not loosen the screws before inserting the connector (subsequent risk of being unable to reinsert the screw).
3. When mineral oil or sterile water is used to make lead insertion easier, the screwdriver should remain inserted into the pre-inserted screw socket when checking the tightness. As a matter of fact, when the lead port is filled with a liquid, the physics piston effect can give the feeling the lead is properly tightened.
4. One single set screw is located on the side of the connection header.
5. Use only the screwdriver provided with the defibrillator. Keep the screwdriver's shaft perpendicular to the plane of the defibrillator (see figure below).
6. Removing the screwdriver: to avoid all risk of loosening screws during removal, hold the screwdriver by its metal part and not by the handle.

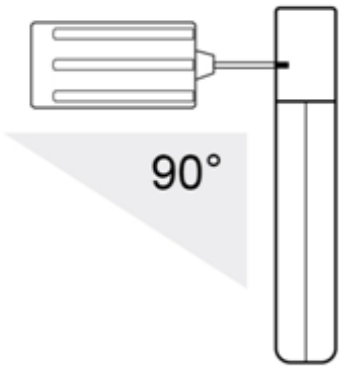

WARNING: Ensure that the screwdriver's tip is fully inserted in the setscrew; otherwise the screwdriver can damage the setscrew and prevent connection with or disconnection from the lead.

To ensure full insertion, push the screwdriver's hex tip smoothly into the setscrew until it reaches the bottom of the hex chamber in the screw, which can be felt as a solid metallic contact. Do not implant the defibrillator if there is no feeling of solid metallic contact. Do not implant the defibrillator if the wrench does not click when attempting to tighten the setscrew on the lead pin.

14.11. DEVICE IMPLANTATION

The device should be implanted with the identification engraved side facing outwards for optimal communication with the programming head and radiographic identification.

In order to prevent lead damage or dislodgement, it is important to loosely coil the leads and place them in a manner that minimizes lead tension, twisting, sharp angles, and pressure.

The following factors should be considered in placing any excess of lead length:

1. recommendations/warnings of the (other) associated leads,
2. patient anatomy, and
3. pulse generator size and motion.

Suture the casing connector to the muscle using the hole provided for this purpose, in order to avoid potential migration of the device into the pectoral muscle.

14.12. TESTS AND PROGRAMMING

During the implant testing procedure:

It is recommended that a safety margin of at least 10 J be demonstrated between the effective shock energy and maximum programmable energy.

Enable shock therapies, then program the defibrillator.

Verify that the defibrillation shock impedance for each shock delivered is within the range of 30 to 150 ohms. Check the lead-connector compatibility if the values are outside these boundaries.

Save the programming data on the programmer’s hard disk and on an external storage device (if desired).

Resuscitation Availability:

Do not perform device testing unless an external defibrillator is available and medical personnel skilled in cardiopulmonary resuscitation (CPR) are present.

Disable the ICD During Handling:

Program Shock Therapy to OFF to prevent the user from receiving an unexpected electrical shock delivered by the device during either system implantation, replacement or post-mortem removal surgical procedures.

CAUTION: It is recommended to reset the memory data and statistics once the device is implanted.

15. SPECIAL MODES

15.1. MRI MODE

The MRI mode is an asynchronous mode (DOO, VOO or OOO) which is triggered either manually or upon detection of a magnetic field.

The MRI Mode is intended to be applied during MRI examination. When MRI Mode is activated (Auto or Manual), the magnet mode is ineffective.

CAUTION: MRI is contraindicated for this model, but in particular circumstances (for instance in emergency situations), MRI exam can be performed on patients implanted with ENERGYA MRI non-conditional system (device and lead) if benefit outweighs risk under clinician responsibility.

NOTE: Refer to the MRI Solutions manual for the complete instructions for use available at www.microportmanuals.com.

15.2. SAFETY MODE (NOMINAL VALUES)

Nominal values may be rapidly restored by pressing the following button on the programming head or programmer keyboard:

or via the Emergency button on the SMARTVIEW screen.

In safety mode, the defibrillator operates with the nominal parameters values in the table of programmable parameters.

15.3. MAGNET MODE

When the magnet is applied:

- ventricular antiarrhythmia functions are inhibited (detection of rhythm disturbances, charging, and therapy),
- VV delay and AVD paced/sensed offset are set to 0,
- RA and RV amplitudes are set to 6V. LV amplitude is unchanged,
- RA and RV widths set to 1ms. LV width is unchanged,
- the following functions are disabled: atrial arrhythmia prevention, ventricular arrhythmia prevention, Mode Switch, Anti-PMT, Smoothing.

When the magnet is removed:

- arrhythmia detection algorithms and sequential therapies are reinitialized,
- therapies start with the least aggressive program for each area.

The antiarrhythmia functions inhibition is extended after magnet removal if a charge occurred just before the application of the magnet in order to ease the communication between the device and the programmer.

The other parameters remain at their programmed value, including the ventricular paced chamber parameter.

15.4. RESPONSE IN THE PRESENCE OF DISTURBANCE

If the defibrillator senses electrical noise at a frequency above 16 Hz, it switches to an asynchronous mode at the basic rate. The programmed mode is restored as soon as the noise is no longer detected.

Ventricular pacing may also be inhibited by ventricular noise. It can be restored by setting the parameter *"V pacing on noise"* to *"On"*.

15.5. DETECTION CHARACTERISTICS IN THE PRESENCE OF ELECTROMAGNETIC FIELDS

Per Clause 27.4 of Standard EN 45502-2-2, detection in the presence of electromagnetic fields is characterized as follows:

— Differential mode:

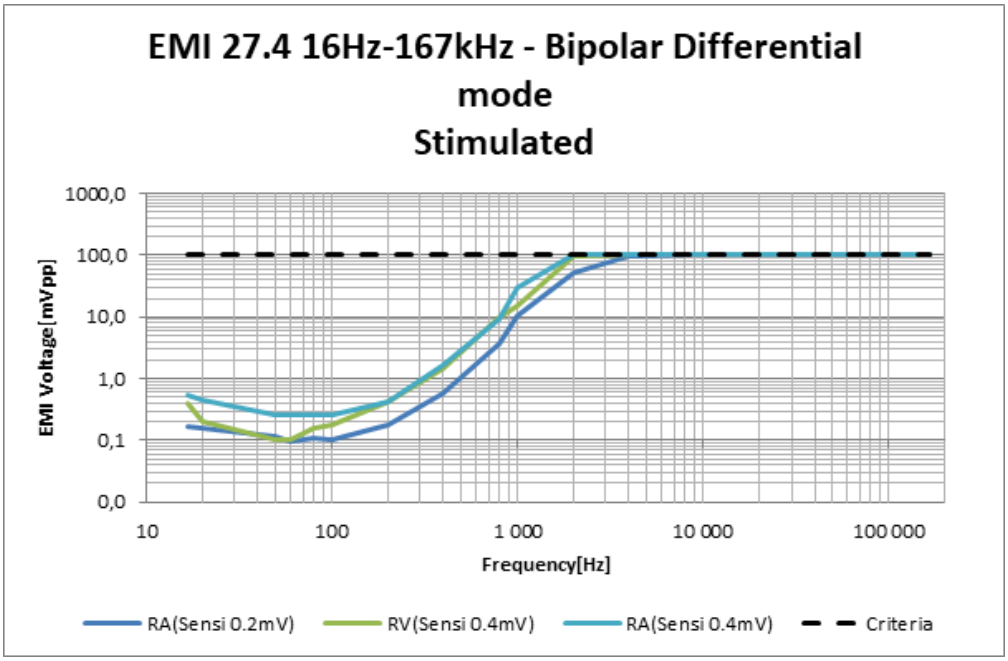

— Common mode rejection ratio:

CMRR (channel vs frequency)	16.6 Hz	50 Hz	60 Hz	100 Hz
Atrial channel	≥75 dB	76 dB	79 dB	74 dB
Ventricular channel	≥68 dB	≥79 dB	≥79 dB	≥75 dB

For atrial sensitivity settings below **0.4mV**, the ICD may detect noise lower than the level specified in clause 27.5.1 of standard EN 45502-2-2 for frequencies below 200 Hz.

For ventricular sensitivity settings below **0.6mV**, the ICD may detect noise lower than the level specified in clause 27.5.1 of standard EN 45502-2-2 for frequencies below 200 Hz.

15.6. PROTECTION AGAINST SHORT-CIRCUITS

The defibrillator can undergo a short-circuit if the anode and cathode are not adequately separated.

In this case, the shock is aborted and a warning will indicate that a short circuit (shock impedance < 20 ohms) was detected during the last shock. The device may be damaged compromising ability to provide shock therapy.

16. MAIN FUNCTIONS

16.1. AUTOMATIC LEAD MEASUREMENTS

Automatic pacing lead impedance measurement:

A lead impedance measurement is automatically performed on atrial and ventricular leads every 6 hours. The daily mean impedance is stored for each chamber.

Automatic coil impedance measurement:

A coil impedance measurement is automatically performed on defibrillation coil(s) once per day. The coil impedance is stored for each coil.

Automatic sensing measurement:

The amplitude of P and R waves are automatically measured at each cycle. Every 8.5 minutes, the amplitude of the last 8 P and R detections are averaged and stored.

16.2. AUTOMATIC PACING THRESHOLD ADAPTATION

The Autothreshold function allows automatic adjustment of the pacing amplitude, according to a pacing threshold test performed by the device at regular interval:

- For the Right Ventricular Autothreshold (RVAT): every 6 hours
- For the Right Atrial (RAAT) and the Left Ventricular (LVAT) Autothresholds: once a day (programmable “Start Time”)

When the Autothreshold function is programmed to "Monitor"

The device determines and stores the pacing threshold but the programmed pacing amplitude is unchanged.

When the Autothreshold function is programmed to "Auto"

The device determines the pacing threshold and programs the pacing amplitude accordingly.

- For the Right Atrial (RAAT) and the Right Ventricular (RVAT) Autothresholds: the pacing amplitude is set to twice the pacing threshold (programmable for A and RV) but never:
  - below the “Minimum Amplitude” (programmable for A and RV),
  - above the “Maximum Amplitude” (5V for A and 6V for RV).

If the device is not able to determine the pacing threshold, the pacing amplitude is forced to a safe amplitude (either the programmable “Safety Amplitude” or the non programmable “Maximum Amplitude”).

- For the Left Ventricular Autothreshold (LVAT): the pacing amplitude is set to pacing threshold + 1V (programmable) but never:
  - below the “Minimum Amplitude” (programmable),
  - above the “Maximum Amplitude” (programmable).

If the device is not able to determine the pacing threshold, the pacing amplitude is forced to a safe amplitude (either the programmable “Safety Amplitude” or “Maximum Amplitude”).

Programming constraints:

1. The Autothreshold function is temporarily disabled if the cardiac rhythm is above a limit rate:
   - For Right Ventricular Autothreshold, 95bpm in DDD(R)/SafeR(R), 85bpm in VVI(R)/DDI(R)
   - For Right Atrial Autothreshold, 80 bpm (programmable)
   - For Left Ventricular Autothreshold, 85 bpm
2. When the Autothreshold function is programmed, the programmable right atrial and right ventricular pulse width are limited to 0.5 ms.
3. Autothreshold functions are not available in asynchronous mode (OOO, VOO, DOO)
4. Right Atrial Autothreshold is not available in the following modes: VVI(R), DDI(R)
5. Left Ventricular Autothreshold is not available in the following mode: SafeR

WARNING: Certain drugs can greatly increase the pacing threshold. The Autothreshold function should be used with caution, properly adjusting the minimal amplitude.

16.3. ATRIAL TACHYARRHYTHMIA MANAGEMENT

Mode Switch:

This function is designed to limit the acceleration and variation of ventricular rate in the presence of atrial arrhythmia.

16.4. VENTRICULAR TACHYARRHYTHMIA MANAGEMENT

Ventricular tachyarrhythmia prevention:

A set of algorithms designed to reduce ventricular ectopic activity of the patient and that can be used to avoid the circumstances of ventricular tachyarrhythmia onset.

Ventricular tachyarrhythmia detection:

The defibrillator analyzes all ventricular events sensed in the detection zone(s). The device classifies each ventricular event according to programmable rate criteria into one of the three following zones: Slow VT, VT, VF.

Arrhythmia discrimination algorithm PARAD and PARAD+ (P And R based Arrhythmia Detection):

PARAD is the algorithm used to discriminate sinus tachycardias (ST) and supraventricular tachycardias (SVT) from ventricular tachycardias (VT).

PARAD+ is based on the PARAD algorithm but additionally takes into account the “AF detect” discrimination criteria: the occurrence of a "long ventricular cycle" characteristic for AF patients which is an additional arrhythmia classification criterion to improve identification of atrial fibrillation and avoid inappropriate shocks.

Ventricular tachyarrhythmia treatment:

The device only applies the programmed therapy for a given category (VF or VT) when:

- the majority is reached (see 13. Programmable parameters),
- the persistence is reached (see 13. Programmable parameters),
- it finds the last ventricular cycle in that category.

Automatic adjustment of tachycardia therapies (“Autoswitch ATP”):

This feature enables the device to apply the last successful therapy (ATP only) first, therefore changing the sequence of ATP programs if necessary.

Fast VT treatment:

Applies detection criteria on fast ventricular tachycardia that are different from those of the VT zone, as well as different therapies. The fast VT zone is included in the VF zone: its lower limit is determined by the programmed value for the VF zone and its upper limit by the programmed value for the fast VT zone.

Polarity alternation on Max shock:

Reverses the programmed polarity of every second shock set at maximum energy. The number, type, and energy of shocks is independently programmable by detection zone.

Defibrillation threshold (DFT):

Be aware that the changes in the patient’s condition, drug regimen, and other factors may change the defibrillation threshold (DFT) which may result in non-conversion of the arrhythmia post-operatively. Successful conversion of ventricular fibrillation or ventricular tachycardia during arrhythmia conversion testing is no assurance that conversion will occur post-operatively.

WARNING: When the pacing mode is programmed to DOO, VOO or OOO, the device does not perform sensing in either atrial and/or right ventricular chamber and tachyarrhythmias therapies (Shocks and ATP) are automatically deactivated. Consequently, tachyarrhythmias cannot be detected nor treated. Use DOO, VOO and OOO mode with caution, only under medical personnel supervision. When leaving DOO, VOO or OOO mode, reactivate the tachyarrhythmias therapies (Shocks and ATP).

16.5. PACING

BTO (Brady Tachy Overlap):

Enables cardiac resynchronization therapy within the slow VT zone to preserve patient exercise capacity, without affecting detection or treatment of slow VTs.

Post-shock mode:

After any automatic shock therapy, the post-shock mode makes it possible to apply a pacing mode other than the standard antibradycardia pacing mode and/or with different pacing parameters.

SafeR (AAI <> DDD) mode:

Is intended to minimize deleterious effects of ventricular pacing. The defibrillator functions in AAI mode, and temporarily switches to DDD mode upon the occurrence of AVB III, AVB II, AVB I and ventricular pause.

Anti-PMT protection:

Is intended to protect the patient from Pacemaker-Mediated Tachycardia (PMT) without reducing atrial sensing capability of the device.

16.6. SENSING

Automatic Refractory Periods:

Optimize sensing and make the implant programming easier. These periods are composed of a minimal Refractory Period and a triggerable Refractory Period. The duration of the refractory periods lengthens automatically as needed.

Committed period:

In DDI or DDD modes, the committed period is a non-programmable 95 ms ventricular relative refractory period that starts with atrial pacing. If a ventricular event is sensed during the committed period, but outside the blanking period, the ventricle is paced at the end of the committed period. The committed period prevents inappropriate ventricular inhibition if crosstalk occurs.

Protection against noise:

Allows the distinction between ventricular noise and ventricular fibrillation. If the device senses ventricular noise, the ventricular sensitivity is decreased until noise is no longer detected. Ventricular pacing can be inhibited to avoid a potential paced T-wave.

Automatic sensitivity control:

Optimizes arrhythmia detection and avoids late detection of T-waves and over-detection of wide QRS waves. The device automatically adjusts the ventricular sensitivity based on the measured ventricular amplitude. The sensitivity value will be lowered in case of VF suspicion.

WARNING:When the pacing mode is programmed to DOO, VOO or OOO, the device does not perform sensing in either atrial and/or right ventricular chamber and tachyarrhythmias therapies (Shocks and ATP) are automatically deactivated. Consequently, tachyarrhythmias cannot be detected nor treated. Use DOO, VOO and OOO mode with caution, only under medical personnel supervision. When leaving DOO, VOO or OOO mode, reactivate the tachyarrhythmias therapies (Shocks and ATP).

16.7. RATE RESPONSE

The rate response function enables the device to adjust the pacing rate based on the patient's physical activity.

The defibrillator is equipped with an accelerometer (G), which measures changes in the patient’s anteroposterior acceleration: a rapid response may thus be obtained at the start of exertion and the end of exertion can be detected immediately.

The rate response is activated through the pacing mode and can be programmed as follow:

— Automatic rate response ("RR Auto" option). The pacing rate is constantly adapted to the patient's physical activity.

— Manual rate response ("RR Fixed" option). In that case, manual programming of the patient's physical activity determines the pacing rate applied, based on the sensor signal.

Rate response is inactive during fallback mode switching (DDD/DDIR mode) if the patient is in sinus rhythm. It becomes active during atrial arrhythmia.

WARNING: Use the Rate Response function with caution in cases of:

1. Severe coronary insufficiency.
2. Severe aortic stenosis.
3. Myocardial function compromised by undue accelerations of the pacing rate.

Programming at implant:

"Learn" and "RR Auto" should not be programmed prior to implant so as not to distort autocalibration.

Surgical procedure:

For safety reasons, it is preferable to deprogram the Rate Response function before any surgical procedure on the defibrillator patient.

Programming requirement:

The DDD/DDIR mode (rate response during fallback mode switching) is accessible only if fallback mode switching is programmed.

NOTE: To protect the patient from inadequate prolonged pacing at high rates, if the patient is paced at Max Rate for a large number of cycles, rate responsive pacing automatically and gradually returns to Basic Rate as long as the rest conditions are not met.

16.8. LEAD PARAMETERS EVALUATION (LPE)

The Lead Parameters Evaluation (LPE) is a multi-settings algorithm that aims to assess the integrity of the Right Ventricular defibrillation lead. This algorithm evaluates several settings according to different timescales. Those settings are chosen to be indicative of a lead issue (lead dislodgment, insulation breach, etc.). The different timescales are chosen to reflect the potential lead issue through different manner.

Each day, LPE analyzes the following settings:

- Electrical Settings:
  - RV Impedance
  - Coil Continuity
  - RV Pacing threshold
  - RV Sensing amplitude
- Rhythmic Settings:
  - Number of not treated VF
  - Number of short ventricular intervals (i.e. short cycle ≤ 180 ms)

LPE analyzes these settings according to the following timescales:

- Short-term: Comparison of a daily value versus a limit
- Mid-term (applicable only for electric settings): Variation between the daily value and the average value of the previous week

Then, each day, LPE can thus raise an alert during the night following the event occurrence based on the following triggers:

1. 1 abnormal electrical setting for 3 days in a row,

2. 2 abnormal settings in a 7 days window (1 of the setting shall necessarily be an electrical one).

The alert is labelled as a critical red alert and as such a 7 day-inhibition period is applied to avoid this recurrent alert to be sent every day. After 7 days without an in-clinic follow-up, if the device still detects the alert, the alert will be sent for the second time. The alert can only be sent two times maximum between two in-clinic follow-ups.

16.9. LEFT VENTRICULAR TRIGGERED PACING ON RIGHT VENTRICULAR SENSING

LV triggered on RV sensing function enables the device to trigger LV paced event when an RV sensed event occurs.

16.10. ELECTROPHYSIOLOGICAL STUDY (EPS)

EPS V function enables the physician to perform VF induction, VT induction and to deliver ventricular manual ATP and ventricular manual shocks.

Physician can stop the test at any time.

16.11. FOLLOW-UP FUNCTION

Storage of memory data:

AIDA (Automatic Interpretation for Diagnosis Assistance) software provides access up to 6 months of patient follow-up with day by day data collection, or up to 24 hours with hourly data collection.

EGM and Markers are recorded on:

— Atrial and ventricular tachyarrhythmia episodes on A and RV EGM channels
— Switch from AAI to DDD (SafeR mode) episodes on A and RV EGM channels
— High RA, RV, LV threshold episodes on A, RV and RVcoil - CAN EGM channels

Diagnosis and Display:

Graphic display of:

— A and RV sensing,
— A, RV and LV leads impedance,
— RV and SVC coils continuity,
— A, RV and LV threshold,
— battery voltage

over time.

Automatic diagnosis of AV conduction with graphic displays.

Alerts / Warnings:

The device routinely performs security self-checks and technical measurements to ensure system integrity. When system integrity is found to be at risk outside a follow-up, alerts are stored in the device memory. When system integrity is found to be at risk during a follow-up, the information is managed by a warning (pop-up message) to immediately notify the user. For example, the following types of events can trigger a warning or an alert: technical problem during a shock, lead impedance or shock continuity measurements out-of-range, battery depletion, etc.

16.12. REMOTE MONITORING FUNCTION

Remote monitoring enables the automatic remote transmission of implant data to the physician thanks to the wireless Bluetooth Low Energy communication ability of the implant in order to provide a comprehensive report to the physician about device functioning and patient cardiac status without having the patient physically in the clinic.

The data is transmitted from the implant to the SMARTVIEW CONNECT monitor, a small transmitter placed in the patient's home.

Implant data are first transmitted to the SMARTVIEW CONNECT monitor via Bluetooth Low Energy. Data are then routed through the mobile network to a protected remote server. This server is responsible for transforming the implant data into a comprehensive report that can be consulted by the physician on a dedicated website. The server also sends notifications to the physician via SMS, email or fax when a new transmission report is available.

16.12.1. SMARTVIEW CONNECT Monitor

The SMARTVIEW CONNECT monitor is a small device equipped with an BlueTooth Low Energy transmission module to communicate with the implant and a modem to export data through the internet.

The SMARTVIEW CONNECT monitor is delivered to the patient who has to install it at home. Preferably the SMARTVIEW CONNECT monitor will be placed on the nightstand of the patient, as close as possible to the side of the bed where the patient usually sleeps. The SMARTVIEW CONNECT monitor needs to be connected to the power plug. The scheduled transmissions, as well as alert transmissions (see below) are done during the night when the patient is asleep next to the SMARTVIEW CONNECT monitor without any intervention from the patient.

16.12.2. Transmission trigger

There are 3 different triggers for a remote transmission:

— the **remote follow-up transmission** is scheduled by the physician to occur regularly (according to the programming).

— the **alert transmission** will take place when the implant has recorded an abnormal events. The list of abnormal event is available in a following paragraph. Alert conditions are checked daily.

— the **on-demand follow-up transmission** is triggered by the patient himself through the use of a specific button on the SMARTVIEW CONNECT monitor.

16.12.3. Data transmitted

The data transmitted are identical to the data available during a standard interrogation with the dedicated programmer. All counters, histograms, IEGMs and diagnosis available in the device are transmitted containing (not an exhaustive list):

— programmed parameters
— information on patient and system implanted
— battery status
— lead status (brady leads and defibrillation coils)
— pacing counters and mean heart rate (brady)
— atrial and ventricular arrhythmia counters and episodes
— ventricular arrhythmia counters and episodes
— ventricular therapy counters

Data are presented in the form of 2 reports to the physician: the first one contains a summary of major counters, histograms, warnings and diagnosis. The second one presents the most important IEGM episodes automatically selected based on the degree of severity for the patient.

16.12.4. User website

On the website, the physician is able to:

— consult and schedule the remote follow-ups of their patient
— configure additional ways of being notified of alerts (for instance by SMS, fax or e-mail)
— consult, print and export patient reports

16.12.5. Alert system

The following set of alert triggers can be independently programmed ON/OFF by the physician using the dedicated programmer and can trigger an alert transmission:

— Low or high lead impedance (A, RV, LV)
— High threshold (A, RV, LV)
— Abnormal coil impedance (shock lead)
— Low or high shock impedance
— Inefficient high energy shock
— RV Lead Parameters Evaluation (LPE)
— All shocks programmed OFF
— Shock treated VT/VF
— ATP treated VT/VF
— Lack of V pacing in CRT device
— Suspicion of noise on the V lead
— AT/AF occurrence
— Fast V rate during AT/AF
— MRI notifications[(1)]

[(1)]*For this model, MRI is contraindicated.*

The following set of alert triggers (system alerts) cannot be deactivated when the Remote monitoring is programmed “On” and can trigger an alert transmission:

— Battery depletion – RRT
— Device reset
— Excessive charge time (>25s)

— System integrity

WARNING: The use of remote monitoring does not replace regular follow-up. Therefore, when using remote monitoring, the time period between follow-ups visits may not be extended.

The device uses BLE technology with authenticated pairing with the SMARTVIEW CONNECT monitor, and data encryption for secure communication.

An excessive BLE usage is an indicator for a possible cyberattack. In this case, the BLE communication may be automatically forced to off. In such event, a warning will appear on the programmer during a follow-up visit to acknowledge the physician.

17. PATIENT FOLLOW-UP

17.1. FOLLOW-UP RECOMMENDATIONS

Before the patient is discharged and at each subsequent follow-up visit, it is advisable to:

— check the occurrence of system warnings

— check the battery status,

NOTES:

If the last reforming, charge or shock occurred during the week preceding the interrogation, the last battery value may be still impacted by the event. One week post event, the battery will recover its steady state value.

Automatic capacitor charging may affect communication between the device and the programmer.

Exiting the programming session before the patient leaves reduces battery consumption and maximizes cybersecurity protection.

— check the integrity of the pacing and defibrillation leads,

— check for proper sensing (sensitivity, crosstalk) and pacing ; set the pacing amplitude to twice the pacing threshold,

— interrogate the implant memories (AIDA),

— check the efficacy of the therapies delivered,

— keep a printout of programmed parameters, test results, and memory data,

— reset the memory data and statistics,

These operations should be performed by medical personnel in an appropriate care unit, with resuscitation equipment present.

It is recommended that a routine follow-up examination be done one month after discharge, and then every three months until the device nears the replacement date.

Refer to the online help for a description of displayed warnings, and the necessity to contact MicroPort for an evaluation.

Implant software update:

The implant provides a secured software update.

In case a new implant software is downloaded in the device memory through the programmer, a warning message could be displayed by the programmer to inform the user and give the correct instructions to follow.

CAUTION: If any issue during Implant Software download, you should contact your MicroPort representative for examination.

17.2. HOLTER FUNCTION

The Holter records markers and EGM on RV and on 1 programmable channel: A, RV coil – CAN, SVC coil – CAN, RV coil - SVC coil, LV bip, LV tip – RV ring, RA ring – CAN, RV tip – CAN, RV ring – CAN, LV tip – CAN, LV ring – CAN:

— Up to 10 episodes and 5 min EGM on significant events: AV block switch, high pacing threshold.
— Up to 16 tachyarrhythmia episodes as well as the therapy history.

Stored Tachyarrhythmia Episodes:

The device stores up to 16 episodes (VF, VT, Slow VT, SVT/ST, non-sustained) with a total of 25.6 min of high resolution EGM.

For each episode four levels of details are presented:

— Tachogram (to visualize RR, PP, PR and RP intervals)
— Event log for the entire episode:
  — PARAD/PARAD+ analysis for each majority,
  — Delivered therapies,
— Markers: Atrial, ventricular and biventricular markers, sensed, paced and in relative refractory periods,
— EGM: onset and detection of the arrhythmia, on two therapies, and the return to slow rhythm by recording electrogram.

Therapy history

For each arrhythmia detection, each therapy delivered (either automatically or during an electrophysiological study) and at the end of each arrhythmia, the device records the type of majority rhythm, the number of ATP sequences delivered, the energy and the number of shocks delivered.

17.3. RECOMMENDED REPLACEMENT TIME (RRT)

Recommended Replacement Time (RRT)[1] is controlled by: battery voltage equal to 2.62 V ± 0.01 V

CAUTION: The defibrillator should be replaced as soon as the Recommended Replacement Time (RRT) point is reached.

Between the RRT and the EOS (End of Service)[2], the device can still function more than 3 months under the following conditions:

— 100% atrial and biventricular pacing in DDD mode, 500 ohms, with as-shipped settings, 42J shock delivery per month or
— No pacing, sensors OFF and 42J shock delivery every 2 weeks.

Once the Recommended Replacement Time (RRT) point has been reached, the device operates normally, except that the charge time increases. Under normal conditions (and without programmer use) the charge times are as follows:

	Shock energy (J)	Charge time (sec)
BOS[3]	42	10 (± 3)
RRT[1]	42	15 (± 3)
EOS[2]	42	20 (± 5)

[1]*Recommended Replacement Time (RRT) corresponds to Elective Replacement Indicators (ERI) previously used*.

[2]*End of Service (EOS) corresponds to End of Life (EOL) previously used*.

[3]*Beginning of Service (BOS) corresponds to Beginning of Life (BOL) previously used*.

17.4. EXPLANTATION

The defibrillator should be explanted in the following cases:

— The Recommended Replacement Time (RRT) point is reached
— Confirmed malfunction
— Burial of the patient (for environmental reasons, the local regulation may require the explantation of the devices containing a battery supply)
— Cremation of the patient (the defibrillator may explode if placed in an incinerator)

The explanted defibrillator should not be reused in another patient.

All explanted defibrillators must be disposed of as medical waste according to applicable local regulations and should be returned to MicroPort, carefully cleaned of all traces of contamination. Cleaning may be done by immersing them in an aqueous sodium hypochlorite containing at least 1% chlorine, followed by rinsing copiously with water. In case of return, please contact your local MicroPort representative.

The defibrillator should be protected against mechanical impact and the temperature variations that may occur during shipping.

Before explantation, it is advisable to:

— Print out all programmed parameters, statistics and Holter function report,
— Save Patient data on floppy disk or hard disk,
— Disable shock therapies (VT and VF) to avoid any risk of untimely shock.

17.5. DEFIBRILLATOR IDENTIFICATION

The defibrillator can be interrogated and programmed via telemetry, using the programming head interfaced with the MicroPort dedicated programmer.

Position the programming head over the telemetry antenna located in the upper part of the device, in order to communicate effectively via telemetry (see diagram below).

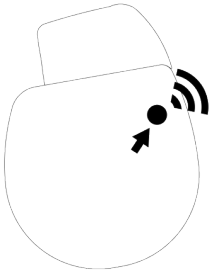

The device can be non-invasively identified as follows:

1. Take an x-ray to identify the name of the manufacturer and defibrillators range (X-ray ID is SEA for MicroPort ICD and CRT-D).

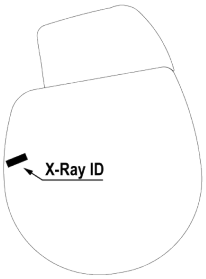

2. Interrogate the device using the MicroPort dedicated programmer. The model and serial number of the device are automatically displayed. The first figure in the serial number corresponds to the last figure in the year of manufacture.

18. SUPPLEMENTAL INFORMATION

Clinical data presented in this section are from the SafeR (AAI <> DDD) clinical study. SafeR (AAI <> DDD) operation in ENERGYA is similar to that in the Symphony pacemaker. The data provided are applicable to ENERGYA CRT-D.

18.1. ADVERSE EVENTS IN THE SAFER (AAI <> DDD) STUDY

Clinical study of the SafeR (AAI <> DDD) included 45 Symphony 2550 devices implanted in 45 patients. No serious adverse events were device- or feature-related. There were no deaths in the study.

Table 1: Summary of Symphony safety data during study

	Patients		**Number of events**	
	Number of patients	% of patients	Number of events	Events per device year [(a)]
Deaths	0	0	0	0
Explants	0	0	0	0
Serious pacemaker related events outside the use of SafeR (AAI <> DDD)	0	0	0	0
Non-serious pacemaker related events outside the use of SafeR (AAI <> DDD)	0	0	0	0
Serious events due to the use of SafeR (AAI <> DDD)	0	0	0	0
Non-serious events related due to the use SafeR (AAI <> DDD)	13	28.9	15	3.2
Serious non-pacemaker related events	6	13.3	9	1.9
Non-serious non-pacemaker related events	8	17.8	8	1.7

[(a)] 4.74 device years

Non-serious events due to the use of SafeR 2 (AAI <> DDD) included: delay in switching on 2nd degree AV block, inappropriate classification of a PAC, disagreement between markers and recorded EGM, atrial pacing above the maximum rate, recycling on an R-wave in a refractory period, and disagreement in the statistics for switches to DDD. No patient symptoms were associated with these events.

18.2. SAFER (AAI <> DDD) CLINICAL STUDY

SafeR (AAI <> DDD) mode in ENERGYA is similar to that in Symphony.

The differences in SafeR (AAI <> DDD) mode between the two devices are:

— To prevent long RR intervals during VT/VF, SafeR (AAI <> DDD) has no effect during VT/VF therapy, electrophysiologic studies, and post-shock recovery.

— The maximum acceptable AV delay for first degree AV block varies as a function of pacing rate.

— ENERGYA requires a ventricular sensed event to atrial paced event (RA) interval of at least 100 ms. Therefore, the device lengthens the atrial escape interval so that it ends at least 102 ms after the ventricular event.

— During atrial fibrillation episode, pause criterion is fixed to 2s to avoid long bradycardia episodes in switching to DDD mode.

Despite these differences, the data collected on Symphony devices are applicable to ENERGYA because the principles of SafeR (AAI <> DDD) operation did not change. The criteria for switching from AAI to DDD (or vice versa) did not change. The device's method for evaluating the presence of AV conduction did not change.

Methods:

All patients were implanted with a Symphony Model 2550 dual-chamber rate-responsive pacemaker with SafeR (AAI <> DDD) mode. A variety of marketed atrial and ventricular pacing leads were used. The pacemaker was programmed and interrogated via bi-directional telemetry using a MicroPort dedicated programmer and a CPR3 programming head.

The study's routine evaluation consisted of enrollment, pre-discharge evaluation, and a scheduled follow-up visit at one month. At pre-discharge, a 24-hour Holter recording was performed and pacemaker memory was read. At one month, pacemaker memory was read. Investigators also documented adverse events.

Patients studied:

A total of 45 patients from 12 centers had Symphony 2550 pacemakers with SafeR (AAI <> DDD). Of these, 14 (31 %) were female and 31 (69 %) were male. Mean patient age (± SD) was 74 ± 9 years.

Primary indications for implant were: 1st degree AV block (11.1 %), 2nd degree AV block (6.7 %), 3rd degree AV block (22.2 %), sinus node dysfunction (62.2 %) or other (6.7 %).

Effectiveness results:

To determine the effectiveness of SafeR (AAI <> DDD) mode, the percentage of ventricular pacing provided over one month was recorded from pacemaker memory.

Thirty-five patients contributed data to evaluate the percentage of ventricular pacing provided with SafeR (AAI <> DDD). Twenty-nine patients had 1 % or less ventricular pacing and six patients had a range of 28-97 % ventricular pacing. The graph below shows the distribution of ventricular pacing observed in patients with and without AV block as a primary indication for implant.

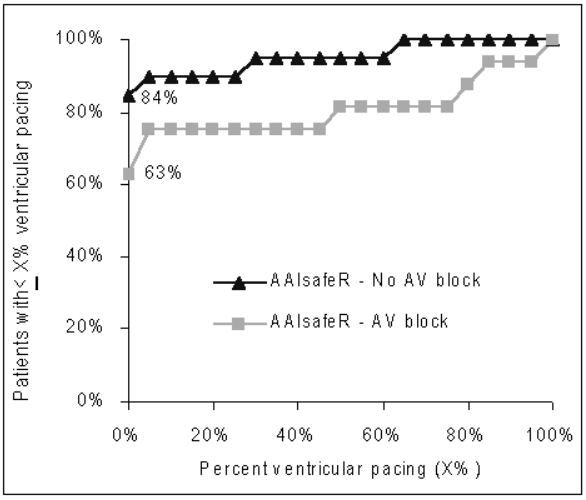

The graph shows that many patients programmed to SafeR (AAI <> DDD) had less than 1% ventricular pacing:

— 84 % of patients without AV block at implant.
— 63 % of patients with AV block at implant.

In a representative reference group[1] of patients programmed to DDD, none had less than 1 % ventricular pacing and only 10 % had less than 90 % ventricular pacing regardless of AV block indication at implant.

The actual reduction of ventricular pacing that SafeR (AAI <> DDD) provides in an individual will depend on the amount of time that the patient spends in AV block. SafeR (AAI <> DDD) cannot and should not provide any decrease in ventricular pacing while the patient is in AV block.

[1] Pioger G, Jauvert G, Nitzsché R, Pozzan J, Laure H, Zigelman M, Leny G, Vandrell M, Ritter P, and Cazeau S. Incidence and predictive factors of atrial fibrillation in paced patients. PACE, 28, Supp 1: S137-141; January 2005. This was a prospective observational study of 377 patients with a functionally similar device programmed to DDD. The primary indications for implant were: AV block (49 %), sinus node disease (16 %), brady-tachy syndrome (5 %), AV block + sinus node disease (19 %), AV block + brady-tachy syndrome (6 %), and brady-tachy syndrome + sinus node disease (5 %).

19. PHYSICAL CHARACTERISTICS

19.1. MATERIALS USED

Active surface area of casing	99% pure titanium
Connectors	Polyurethane* and silicone elastomer*

Medical-grade materials that have undergone "in vitro" and "in vivo" qualifications.

20. ELECTRICAL CHARACTERISTICS

Atrial input impedance	80 kilohms ± 40 %
Ventricular input impedance	80 kilohms ± 30 %
D.C. capacitance	149 µF ± 8 %
Capacitor reformation	No reformation required
Rate limit	192 ppm ± 10 ppm
Pacing waveform	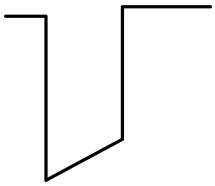
Defibrillation waveform	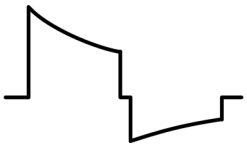

20.1. TABLE OF DELIVERED SHOCK ENERGY AND VOLTAGE

The relationship between stored energies, maximum voltages and delivered energies (at 37°C, 50 ohm load) for the minimum, low, mean and maximum programmed energy values is as follows:

Stored energy (J)	0.5	10	20	34	42
V1 (Volt)	71	332	471	617	686
V2 (Volt)	35	167	235	309	342
Delivered E: Phase 1 (J)	0.32	6.94	14.0	23.8	29.6
Delivered E: Phase 2 (J)	0.08	1.75	3.4	6.0	7.4
Delivered E: Total (J)	0.4	8.7	17.4	30	37

Tolerances are 12% for voltage (25% at 0.5 J) and 30% for energy.

20.2. BATTERY

Manufacturer	Greatbatch
Type	Quasar High Rate (QHR)
Model	GB 3070
Number of batteries	1
Total capacity	2192 mAh
Usable capacity	Between BOS and RRT: 1530 mAh. Between BOS and EOS: 1910 mAh.
Voltage	BOS: 3.24 V. RRT: 2.62 V. EOS: 2.5 V.

20.3. LONGEVITY

The longevities are calculated by taking into account 6 months storage with the following conditions:

— Mode: DDD
— Basic rate: 60 ppm
— Pulse width (A, RV, LV): 0.35 ms
— EGM: ON
— 2 battery reformings per year (at 34J), replaced by shocks if any
— Remote monitoring: ON, daily check, 4 follow-ups and 5 full alert reports per year
— RF telemetry: ON, 120min at implantation + 15min at discharge + 15min for in-clinic quarterly follow-ups

Longevity projection at 500 Ω pacing impedance:

A pacing (%)	100	100	1	15	1	30	0
BiV pacing (%)	100	100	100	100	100	100	0
A, RV Pacing amplitude (V)	3.5	3.5	3.5	4.5	2.5	2.5	-
LV Pacing amplitude (V)	3.5	3.5	3.5	4.5	2.5	3.0	-
Sensor	OFF	ON	ON	ON	OFF	OFF	OFF
Max shocks (42J) per year	4	4	4	4	0	3	4
Longevity (years)	7.4	7.2	8.6	6.8	12.8	10.8	14.3

Longevity projection at 600 Ω pacing impedance:

A pacing (%)	100	100	1	15	1	30	0
BiV pacing (%)	100	100	100	100	100	100	0
A, RV Pacing amplitude (V)	3.5	3.5	3.5	4.5	2.5	2.5	-
LV Pacing amplitude (V)	3.5	3.5	3.5	4.5	2.5	3.0	-
Sensor	OFF	ON	ON	ON	OFF	OFF	OFF
Max shocks (42J) per year	4	4	4	4	0	3	4
Longevity (years)	7.9	7.8	9.1	7.3	13.4	11.3	14.3

Longevity projection at 700 Ω pacing impedance:

A pacing (%)	100	100	1	15	1	30	0
BiV pacing (%)	100	100	100	100	100	100	0
A, RV Pacing amplitude (V)	3.5	3.5	3.5	4.5	2.5	2.5	-
LV Pacing amplitude (V)	3.5	3.5	3.5	4.5	2.5	3.0	-
Sensor	OFF	ON	ON	ON	OFF	OFF	OFF
Max shocks (42J) per year	4	4	4	4	0	3	4
Longevity (years)	8.4	8.2	9.5	7.8	13.9	11.7	14.3

The mean longevity as a function of shocks delivered at maximum energy, with and without pacing, is as follows:

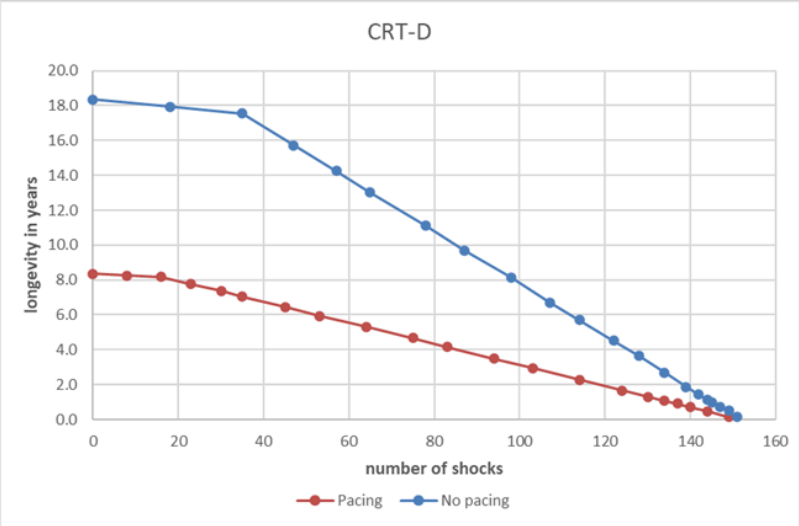

The mean longevity as a function of yearly remote follow-ups[1], with and without pacing, is as follows:

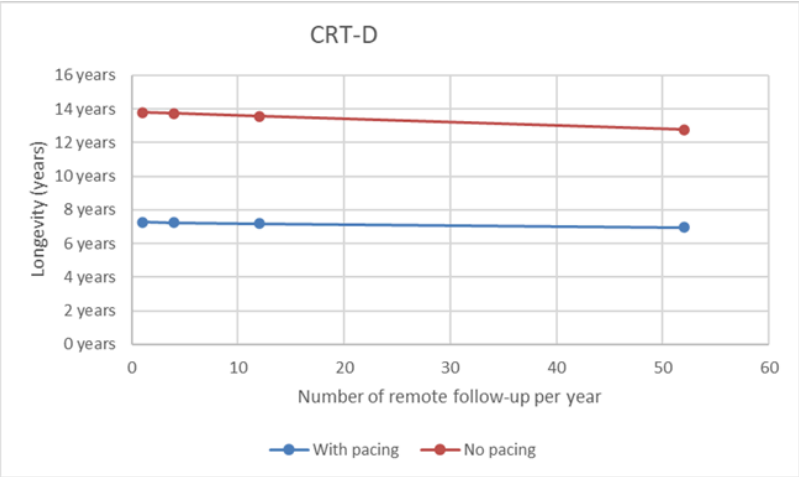

[1]*An excessive number of remote follow-ups can have a non-negligible impact on device longevity*.

1h of additional RF programming session reduces the device longevity from 3 to 10 days depending on the device functioning mode (no pacing, 100% pacing, number of shocks per year, sensors, …).

20.4. RADIO EQUIPMENT EMISSION

Radio Equipment	Transmitter Frequency Bands Maximal Power	Receiver Frequency Bands
Bluetooth Low Energy™ ® RF telemetry (ISM Band)	Bluetooth Low Energy 4.2 2400-2483.5 MHz -21.6 dBm max implanted	Bluetooth Low Energy 4.2 2400-2483.5 MHz
Inductive Telemetry	Slow mode: 8kHz, Fast mode: 16kHz Simulated Worst Case (16kHz) in continuous communication, -7.4 dBµA max at 10m	Slow mode: Frequency ~30kHz modulation pulsed, Fast mode: Frequency ~70 kHz modulation pulsed.

20.5. CONFORMITY TO STANDARDS FOR SAFETY AND ELECTROMAGNETIC COMPATIBILITY

ENERGYA CRT-D defibrillators conform to the following standards for active implantable medical devices for safety and electromagnetic compatibility:

— ISO 14117
— EN 45502-1
— EN 45502-2-2
— ISO 14708-1
— ISO 14708-6

21. PROGRAMMABLE PARAMETERS

Measured at 37 °C under a 500 ohm load.

NOTE: The Nominal values are programmed in case of Safety mode or proposed as default values in case of reprogramming after a Safety Mode.

21.1. ANTIBRADYCARDIA PACING

Basic parameters	Values	Nominal value	"As shipped" value
Mode	VVI-VVIR-DDD-DDDR-DDD/DDIR-DDI-DDIR-SafeR (AAI <=> DDD)-SafeR-R (AAIR <=> DDDR)-DOO-VOO-OOO	VVI	DDD
Basic rate (ppm) (1)	From 30 to 90 by steps of 5 (± 4 %)	60	60
Maximum rate (ppm)	From 100 to 145 by steps of 5 (± 6 %)	120	120
Rate hysteresis (%)	0-5-10-20-35 (± 18 ms)	0	0
Rest AV delay (ms)	30-40-45-55-65-70-80-85-95-100-110-115-125-135-140-150-155-165-170-180-190-195-205-210-220-225-235-250 (± 19 ms)	110	110
Exercise AV delay (ms)	30-40-45-55-65-70-80-85-95-100-110-115-125-135-140-150-155-165-170-180-190-195-205-210-220-225-235-250 (± 19 ms)	70	70
AVD Paced/Sensed Offset (ms)	0-10-15-25-30-40-45-55-65-70-80-85-95-100-110-115-125 (± 1 ms)	30	30

(1) The corresponding periods are (in ms):
2000-1714-1500-1333-1200-1091-1000-923-857-800-750-706-667 ms.

Special features	Values	Nominal value	"As shipped" value
Rate smoothing	OFF-Very Slow-Slow-Medium-Fast	OFF	OFF
Mode Switch	ON-OFF	ON	ON
Mode Switch Rate (ppm)	From 30 to 90 by steps of 5	60	60
Anti-PMT protection	Termin-Reprog	Termin	Termin
LV triggered pacing	ON-OFF	OFF	OFF

Pacing/Sensing	Values	Nominal value	"As shipped" value
Atrial sensitivity (mV) (1)	From 0.2 to 4 by steps of 0.2 (± 50 %)	0.4	0.4
Atrial amplitude (V) (2)	1-1.5-2-2.5-3-3.5-4-4.5-5-6 (± 20 %)	5	3.5
Atrial pulse width (ms)	0.12-0.25-0.35-0.5-0.6-0.75-0.85-1 (± 10 %)	0.35	0.35
Ventricular sensitivity (mV) (1)	From 0.4 to 4 by steps of 0.2 (± 50 %)	0.4	0.4
RV amplitude (V) (2)	1-1.5-2-2.5-3-3.5-4-4.5-5-6 (± 20 %)	5	3.5
RV pulse width (ms)	0.12-0.25-0.35-0.5-0.6-0.75-0.85-1 (± 10 %)	0.35	0.35
LV amplitude (V) (2)	0.1-0.25-0.35 (± 80 %) 0.5-0.6-0.75-0.85 (± 30 %) 1-1.1-1.25-1.35-1.5-1.6-1.75-1.85-2-2.1-2.25-2.35-2.5-2.6-2.75-2.85-3-3.1-3.25-3.35-3.5-3.6-3.75-3.85-4-4.1-4.25-4.35-4.5-4.6-4.75-4.85-5-5.1-5.25-5.35-5.5-5.6-5.75-5.85-6-6.1-6.25-6.35-6.5-6.6-6.75-6.85-7 (± 20 %)	5	3.5
LV pulse width (ms)	0.12-0.25-0.35-0.5-0.6-0.75-0.85-1-1.1-1.25-1.35-1.5-1.6-1.75-1.85-2 (± 10 %)	0.35	0.35
LV pacing polarity	LV bipolar-LV tip to RV ring- LV ring to RV coil-LV tip to RV coil- LV ring to CAN-LV tip to CAN	LV tip to RV coil	LV tip to RV coil
V chambers	Right-Left-R+L-L+R	R+L	R+L
VV delay (ms)	0-16-24-32-40-48-56-64 (± 3 ms)	0	0

(1) Values are measured using a positive and negative triangular signal of 2/13 ms.

(2) The correlation between the programmed amplitudes, the stored amplitudes and the mid-pulse delivered amplitudes under a 500 ohm load are given in the following table:

Programmed amplitude (V)	Stored amplitude (V)	Mid-pulse delivered amplitude (V)	Programmed amplitude (V)	Stored amplitude (V)	Mid-pulse delivered amplitude (V)
0.10*	0.20	0.19	1.85*	2.02	1.71
0.25*	0.26	0.22	2.00	2.10	1.78
0.35*	0.39	0.33	2.10*	2.21	1.87
0.50*	0.52	0.44	2.25*	2.34	1.98
0.60*	0.72	0.61	2.35*	2.47	2.09
0.75*	0.85	0.72	2.50	2.60	2.20
0.85*	0.98	0.83	2.60*	2.73	2.31
1.00	1.11	0.94	2.75*	2.87	2.42
1.10*	1.24	1.05	2.85*	3.00	2.53
1.25*	1.37	1.16	3.00	3.15	2.67
1.35*	1.50	1.27	3.10*	3.26	2.76
1.50	1.63	1.38	3.25*	3.39	2.87
1.60*	1.76	1.49	3.35*	3.52	2.98
1.75*	1.89	1.60	3.50	3.65	3.09

Programmed amplitude (V)	Stored amplitude (V)	Mid-pulse delivered amplitude (V)
3.60*	3.78	3.20
3.75*	3.91	3.31
3.85*	4,04	3.42
4.00	4.20	3.55
4.10*	4.30	3.64
4.25*	4.43	3.75
4.35*	4.56	3.86
4.50	4.69	3.97
4.60*	4.82	4.08
4.75*	4.95	4.19
4.85*	5.08	4.30
5.00	5.25	4.44
5.10*	5.34	4.52
5.25*	5.47	4.63

Programmed amplitude (V)	Stored amplitude (V)	Mid-pulse delivered amplitude (V)
5.35*	5.60	4.74
5.50*	5.73	4.85
5.60*	5.86	4.96
5.75*	5.99	5.07
5.85*	6.12	5.18
6.00	6.30	5.33
6.10*	6.38	5.40
6.25*	6.51	5.51
6.35*	6.64	5.62
6.50*	6.77	5.73
6.60*	6.90	5.84
6.75*	7.03	5.95
6.85*	7.16	6.06
7.00*	7.35	6.22

** For left ventricular amplitude only.*

Ventricular arrhythmia algorithms	Values	Nominal value	"As shipped" value
Atrial pacing on PVC	Yes-No	No	No
PVC pause suppression	Yes-No	No	No
Acceleration on PVC	Yes-No	No	No
Max acceleration rate (ppm)	From 60 to 145 by steps of 5	100	100

Atrial arrhythmia algorithms	Values	Nominal value	"As shipped" value
Overdrive	Yes-No	No	No
PAC pause suppression	Yes-No	No	No
Acceleration on PAC	Yes-No	No	No
Maximum Overdrive rate (ppm)	80-90-100-110-130	100	100

Rate responsive parameters	Values	Nominal value	"As shipped" value
Sensor choice	G	G	G
Rate response mode	Learn-RR auto-RR fixed-No	No	No
Physical activity	Very low-Low-Medium-High-Very high	Medium	Medium

Post-shock mode	Values	Nominal value	"As shipped" value
Mode	OFF-VVI-DDI-DDD	DDD	DDD
Duration	10s-20s-30s-1min-2min-3min-4min-5min	20s	20s
Basic rate (ppm)	From 50 to 90 by steps of 5 (± 4 %)	80	80
Rest AV delay (ms)	30-40-45-55-65-70-80-85-95-100-110-115-125-135-140-150-155-165-170-180-190-195-205-210-220-225-235-250 (± 19 ms)	110	110
Exercise AV delay (ms)	30-40-45-55-65-70-80-85-95-100-110-115-125-135-140-150-155-165-170-180-190-195-205-210-220-225-235-250 (± 19 ms)	70	70
AVD Paced/Sensed Offset (ms)	0-10-15-25-30-40-45-55-65-70-80-85-95-100-110-115-125 (± 1 ms)	30	30
A amplitude (V)	1-1.5-2-2.5-3-3.5-4-4.5-5-6 (± 20 %)	6	6
A pulse width (ms)	0.12-0.25-0.35-0.5-0.6-0.75-0.85-1 (± 10 %)	1	1
RV amplitude (V)	1-1.5-2-2.5-3-3.5-4-4.5-5-6 (± 20 %)	6	6
RV pulse width (ms)	0.12-0.25-0.35-0.5-0.6-0.75-0.85-1 (± 10 %)	1	1
LV amplitude (V)	0.1-0.25-0.35 (± 80 %) 0.5-0.6-0.75-0.85 (± 30 %) 1-1.1-1.25-1.35-1.5-1.6-1.75-1.85-2-2.1-2.25-2.35-2.5-2.6-2.75-2.85-3-3.1-3.25-3.35-3.5-3.6-3.75-3.85-4-4.1-4.25-4.35-4.5-4.6-4.75-4.85-5-5.1-5.25-5.35-5.5-5.6-5.75-5.85-6-6.1-6.25-6.35-6.5-6.6-6.75-6.85-7 (± 20 %)	6	6
LV pulse width (ms)	0.12-0.25-0.35-0.5-0.6-0.75-0.85-1-1.1-1.25-1.35-1.5-1.6-1.75-1.85-2 (± 10 %)	1	1

Autothreshold Parameters	Values	Nominal value	"As shipped" value
Right Atrial Autothreshold	Auto-OFF-Monitoring	OFF	OFF
Right Atrial Amplitude Safety Margin	X1.5-X2-X2.5-X3	X2	X2
Right Atrial Minimum Amplitude (V)	1-1.5-2-2.5-3-3.5	1.5	1.5
Right Atrial Safety Amplitude (V)	2-2.5-3-3.5-4-4.5-5	3.5	3.5
Right Atrial Maximum Rate (ppm)	100-110-120	110	110
Right Atrial Autothreshold Start Time	00am-01am-02am-12pm	02am	02am
Right Ventricular Autothreshold	Auto-OFF-Monitoring	OFF	OFF
Right Ventricular Amplitude Safety Margin	X1.5-X2-X2.5-X3	X2	X2
Right Ventricular Minimum Amplitude (V)	1-1.5-2-2.5-3-3.5	2.5	2.5
Right Ventricular Safety Amplitude (V)	2-2.5-3-3.5-4-4.5-5-6	3.5	3.5
Left Ventricular Autothreshold	Auto-OFF-Monitoring	OFF	OFF
Left Ventricular Amplitude Safety Margin	+0.5-+1-+1.5-+2-+2.5	+1	+1
Left Ventricular Minimum Amplitude (V)	1-1.5-2-2.5-3-3.5	1.5	1.5
Left Ventricular Safety Amplitude (V)	2-2.5-3-3.5-4-4.5-5	3.5	3.5
Left Ventricular Maximum Amplitude (V)	2-2.5-3-3.5-4-4.5-5-6-7	5	5
Left Ventricular Start Time	00am-01am-02am-12pm	01am	01am

Refractory periods	Values	Nominal value	"As shipped" value
Atrial refractory period post ventricular sensing (ms)	45-65-80-95-110-125-140-155 (± 16 ms)	45	45
Atrial refractory period post ventricular pacing (ms)	80-95-110-125-140-155 (± 4 ms)	80	80

Sensitivity margins	Values	Nominal value	"As shipped" value
Atrial post pacing/sensing margin (mV)	From 0 to 1 by steps of 0.2	0.4	0.4
Ventricular post pacing margin (mV)	From 0 to 2 by steps of 0.2	0.8	0.8

Response to noise	Values	Nominal value	"As shipped" value
Automatic sensitivity on noise	ON-OFF	ON	ON
V pacing on noise	ON-OFF	OFF	OFF

SafeR parameters	Values	Nominal value	"As shipped" value
AVB I switch	Rest+Exercise-Exercise	Exercise	Rest+Exercise
Max. pause (s)	2-3-4	2	2
Long PR: max (ms)	80-100-125-150-200-250-300-350-400-450-500	450	450
Long PR: min (ms)	80-100-125-150-200-250-300-350-400-450-500	250	250

MRI Mode parameters	Values	Nominal value	"As shipped" value
MRI Mode (1)	Auto-Manual-OFF	OFF	OFF
MRI Pacing Mode (1)(2)	DOO-VOO-OOO	DOO	DOO
MRI Pacing Rate (ppm) (1)(3)	50-55-60-65-70-75-80-85-90-95-100-105-110-115-120 (± 2 ppm)	80	80
MRI Monitoring Period (h) (1)	Auto:2h-4h-6h-12h-1 day-2 days-3 days-7 days-10 days Manual:2h-4h-6h-12h-1 day-2 days	1 day	Auto:1 day Manual:12h

(1) For this model, MRI is contraindicated.

(2) LV stimulation is deactivated during the MRI mode

(3) Default pacing rate is 20 ppm over programmed basic rate.

21.2. VENTRICULAR TACHYARRHYTHMIA DETECTION

Therapy zones	Values	Nominal value	"As shipped" value
Slow VT detection zone	Slow VT ON-Slow VT OFF	Slow VT OFF	Slow VT OFF
VT detection zone	VT ON-VT OFF	VT OFF	VT OFF
Fast VT / VF detection zone	Fast VT+VF ON-VF ON	VF ON	VF ON
Slow VT rate (lower limit) (ppm)	From 100 to 200 by steps of 5	190	190
VT rate (lower limit) (ppm)	130-135-140-145-150-155-160-165-170-175-180-185-190-195-200-210-220-230	190	190
VF rate (lower limit) (ppm)	150-155-160-165-170-175-180-185-190-195-200-210-220-230-240	190	190
Fast VT rate (upper limit) (ppm)	155-160-165-170-175-180-185-190-195-200-210-220-230-240-255	190	190
Slow VT persistence (cycles)	4-6-8-12-16-20-30-50-100-200	20	20
VT persistence (cycles)	4-6-8-12-16-20-30-50-100-200	20	20
VF persistence (cycles)	From 4 to 20 by steps of 1	12	12

Detection criteria	Values	Nominal value	"As shipped" value
Slow VT and VT detection criteria	Rate Only-Stability-Stability+-Stability/Acc-Stability+/Acc-PARAD-PARAD+	PARAD	PARAD+
Fast VT detection criteria	Rate+Stability-Rate Only	Rate+Stability	Rate+Stability
Majority: (X/Y), Y (cycles)	8-12-16	8	8
Majority: (X/Y), X (%)	65-70-75-80-90-95-100	75	75
Window of RR stability for Slow VT and VT (ms)	30-45-65-80-95-110-125	65	65
Window of RR stability for fast VT (ms)	30-45-65	30	30
Acceleration (%)	6-13-19-25-31-38-44-50	25	25
Long cycle persistence extension (cycles)	From 0 to 16 by steps of 1	10	10
Long cycle gap (ms)	15-30-45-65-80-95-110-125-140-155-170-190-205	170	170
Atrial monitoring	Yes-No	Yes	Yes

21.3. VENTRICULAR TACHYARRHYTHMIA THERAPIES

Common parameters	Values	Nominal value	"As shipped" value
Enable ATP therapy	Yes-No	No	No
Enable shock therapy	Yes-No	Yes	No
ATP pacing chamber	Right-Left-R+L	Right	Right
Polarity alternation (42J)	Yes-No	Yes	Yes
Atrial coil (SVC) present	Yes-No	(1)	Yes
Shock configuration (+ --> -)	Case to RV-SVC to RV- Case + SVC to RV-RV to Case- RV to SVC-RV to Case + SVC	RV to Case	RV to Case
SVC exclusion (shock < 15J)	Yes-No	No	No
Autoswitch ATP	Yes-No	Yes	Yes
Active case	Yes-No	(1)	Yes

(1) Value depending on the previous programming

21.3.1. Therapy parameters in slow VT zone

ATP 1 program	Values	Nominal value	"As shipped" value
ATP program	OFF-Burst-Burst+Scan-Ramp-Ramp+Scan	OFF	OFF
Number of sequences	1-2-3-4-5-6-7-8-9-10-11-12-13-14-15	3	3
Cycles in first sequence	1-2-3-4-5-6-7-8-9-10-11-12-13-14-15	8	8
Cycles added per sequence	0-1-2-3-4-5-6-7-8-9-10-11-12-13-14-15	0	0
Coupling interval (%)	50-55-60-65-70-75-80-85-90-95	80	80
Ramp decrement (per cycle) (ms)	0-4-8-12-16-20-30-40-50-60	0	0
Scan decrement (per sequence) (ms)	0-4-8-12-16-20-30-40-50-60	8	8
Time limit (min)	0.5-1-1.5-2-2.5-3-3.5-4	2	2
Minimum cycle length (ms)	95-110-125-140-155-170-190-205-220-235-250-265-280-295-310	220	220

ATP 2 program	Values	Nominal value	"As shipped" value
ATP program	OFF-Burst-Burst+Scan-Ramp-Ramp+Scan	OFF	OFF
Number of sequences	1-2-3-4-5-6-7-8-9-10-11-12-13-14-15	3	3
Cycles in first sequence	1-2-3-4-5-6-7-8-9-10-11-12-13-14-15	6	6
Cycles added per sequence	0-1-2-3-4-5-6-7-8-9-10-11-12-13-14-15	1	1
Coupling interval (%)	50-55-60-65-70-75-80-85-90-95	85	85
Ramp decrement (per cycle) (ms)	0-4-8-12-16-20-30-40-50-60	8	8
Scan decrement (per sequence) (ms)	0-4-8-12-16-20-30-40-50-60	0	0
Time limit (min)	0.5-1-1.5-2-2.5-3-3.5-4	2	2
Minimum cycle length (ms)	95-110-125-140-155-170-190-205-220-235-250-265-280-295-310	220	220

Shock program	Values	Nominal value	"As shipped" value
Shock 1 (J)	OFF-0.5-0.8-1-1.3-1.5-2-2.5-3-3.5-4-5-6-7-8-9-10-12-14-16-18-20-22-24-26-28-30-32-34-42	OFF	OFF
Shock 2 (J)	OFF-0.5-0.8-1-1.3-1.5-2-2.5-3-3.5-4-5-6-7-8-9-10-12-14-16-18-20-22-24-26-28-30-32-34-42	OFF	OFF
Number of Max. Shock (42 J)	OFF-1-2-3-4	OFF	OFF

21.3.2. Therapy parameters in VT zone

ATP 1 program	Values	Nominal value	"As shipped" value
ATP program	OFF-Burst-Burst+Scan-Ramp-Ramp+Scan	Burst+Scan	Burst+Scan
Number of sequences	1-2-3-4-5-6-7-8-9-10-11-12-13-14-15	3	3
Cycles in first sequence	1-2-3-4-5-6-7-8-9-10-11-12-13-14-15	8	8
Cycles added per sequence	0-1-2-3-4-5-6-7-8-9-10-11-12-13-14-15	0	0
Coupling interval (%)	50-55-60-65-70-75-80-85-90-95	80	80
Ramp decrement (per cycle) (ms)	0-4-8-12-16-20-30-40-50-60	0	0
Scan decrement (per sequence) (ms)	0-4-8-12-16-20-30-40-50-60	8	8
Time limit (min)	0.5-1-1.5-2-2.5-3-3.5-4	2	2
Minimum cycle length (ms)	95-110-125-140-155-170-190-205-220-235-250-265-280-295-310	220	220

ATP 2 program	Values	Nominal value	"As shipped" value
ATP program	OFF-Burst-Burst+Scan-Ramp-Ramp+Scan	Ramp	Ramp
Number of sequences	1-2-3-4-5-6-7-8-9-10-11-12-13-14-15	3	3
Cycles in first sequence	1-2-3-4-5-6-7-8-9-10-11-12-13-14-15	6	6
Cycles added per sequence	0-1-2-3-4-5-6-7-8-9-10-11-12-13-14-15	1	1
Coupling interval (%)	50-55-60-65-70-75-80-85-90-95	85	85
Ramp decrement (per cycle) (ms)	0-4-8-12-16-20-30-40-50-60	8	8
Scan decrement (per sequence) (ms)	0-4-8-12-16-20-30-40-50-60	0	0
Time limit (min)	0.5-1-1.5-2-2.5-3-3.5-4	2	2
Minimum cycle length (ms)	95-110-125-140-155-170-190-205-220-235-250-265-280-295-310	220	220

Shock program	Values	Nominal value	"As shipped" value
Shock 1 (J)	OFF-0.5-0.8-1-1.3-1.5-2-2.5-3-3.5-4-5-6-7-8-9-10-12-14-16-18-20-22-24-26-28-30-32-34-42	OFF	OFF
Shock 2 (J)	OFF-0.5-0.8-1-1.3-1.5-2-2.5-3-3.5-4-5-6-7-8-9-10-12-14-16-18-20-22-24-26-28-30-32-34-42	OFF	OFF
Number of Max. Shock (42 J)	OFF-1-2-3-4	4	4

21.3.3. Therapy parameters in fast VT / VF zone

ATP 1 program	Values	Nominal value	"As shipped" value
ATP program	OFF-Burst-Burst+Scan-Ramp-Ramp+Scan	Burst	Burst
Number of sequences	1-2-3-4-5-6-7-8-9-10-11-12-13-14-15	1	1
Cycles in first sequence	1-2-3-4-5-6-7-8-9-10-11-12-13-14-15	8	8
Cycles added per sequence	0-1-2-3-4-5-6-7-8-9-10-11-12-13-14-15	0	0
Coupling interval (%)	50-55-60-65-70-75-80-85-90-95	80	80
Ramp decrement (per cycle) (ms)	0-4-8-12-16-20-30-40-50-60	0	0
Scan decrement (per sequence) (ms)	0-4-8-12-16-20-30-40-50-60	0	0
Time limit (s)	10s-20-30-60-90-120	30	30
Minimum cycle length (ms)	95-110-125-140-155-170-190-205-220-235-250-265-280-295-310	205	205

Shock program	Values	Nominal value	"As shipped" value
Shock 1 (J)	OFF-0.5-0.8-1-1.3-1.5-2-2.5-3-3.5-4-5-6-7-8-9-10-12-14-16-18-20-22-24-26-28-30-32-34-42	OFF	OFF
Shock 2 (J)	OFF-0.5-0.8-1-1.3-1.5-2-2.5-3-3.5-4-5-6-7-8-9-10-12-14-16-18-20-22-24-26-28-30-32-34-42	OFF	OFF
Number of Max. Shock (42 J)	1-2-3-4	4	4

21.4. REMOTE ALERTS AND WARNINGS

The device routinely performs security self-checks and technical measurements to ensure system integrity. When system integrity is found to be at risk outside a follow-up, alerts are stored in the device memory. When system integrity is found to be at risk during a follow-up, the information is managed by a warning (pop-up message) to immediately notify the user. For example, the following types of events can trigger a warning or an alert: technical problem during a shock, pacing lead impedance or coil impedance measurements out-of-range, battery depletion, etc. The Remote tab presents an overview of all the alerts managed by the device.

General parameter	Values	Nominal value	"As shipped" value
Remote monitoring (1)	ON-OFF	ON	OFF

(1) Remote monitoring is turned on automatically is Shocks are programmed ON.

When Remote monitoring is programmed "On", the following System Alerts are automatically activated:

— “Battery depletion – RRT”

— “Device reset”

— “Excessive charge time (>25s)”

— “System integrity”

Lead Alerts	Values	Nominal value	"As shipped" value
Abnormal A lead impedance	ON-OFF	ON	ON
Abnormal A lead low limit (Ohm)	200-250-300-350-400-450-500	200	200
Abnormal A lead high limit (Ohm)	1500-1750-2000-2500-3000	3000	3000
Abnormal RV lead impedance	ON-OFF	ON	ON
Abnormal RV lead low limit (Ohm)	200-250-300-350-400-450-500	200	200
Abnormal RV lead high limit (Ohm)	1500-1750-2000-2500-3000	3000	3000
Abnormal LV lead impedance	ON-OFF	ON	ON
Abnormal LV lead low limit (Ohm)	200-250-300-350-400-450-500	200	200
Abnormal LV lead high limit (Ohm)	1500-1750-2000-2500-3000	3000	3000
Abnormal RV coil impedance	ON-OFF	ON	ON
Abnormal SVC coil impedance	ON-OFF	ON	ON
Abnormal Shock impedance (1)	ON-OFF	ON	ON
Atrial Autothreshold	ON-OFF	ON	ON
Atrial Autothreshold High Limit (V)	1-1.25-1.5-1.75-2-2.25-2.5-3-3.5-4	2	2
Right Ventricular Autothreshold	ON-OFF	ON	ON
Right Ventricular Autothreshold High Limit (V)	1-1.25-1.5-1.75-2-2.25-2.5-3-3.5-4-4.5-5	2.5	2.5
Left Ventricular Autothreshold	ON-OFF	ON	ON
Left Ventricular Autothreshold High Limit (V)	1-1.25-1.5-1.75-2-2.25-2.5-3-3.5-4-4.5-5 -6-7	2.5	2.5
RV Lead Parameters Evaluation (LPE)	ON-OFF	ON	ON

(1) Normal impedance range [20 Ohm-200 Ohm]

Clinical status	Values	Nominal value	"As shipped" value
V oversensing	ON-OFF	ON	ON
V oversensing limit (nb of episodes)	1-2-3-4-5-6	2	2
AT/AF burden	ON-OFF	ON	ON
AF burden daily limit 1 (h)	6 min-15 min-30 min-1h-3h-6h-12h-24h	6 min	6 min
AF burden daily limit 2 (h)	OFF-15 min-30 min-1h-3h-6h-12h-24h	6h	6h
AF burden daily limit 3 (h)	OFF-30 min-1h-3h-6h-12h-24h	24h	24h
Fast V Rate during AT/AF	ON-OFF	OFF	OFF
Fast V Rate limit (ppm)	80-90-100-110-120	100	100
Fast V Duration limit (h)	0.5-1-3-6-12-24	1	1
Limited % of V pacing in CRT	ON-OFF	ON	ON
Limited % of V pacing (%)	50-70-80-85-90-95	80	80

Therapy information	Values	Nominal value	"As shipped" value
Shock disabled	ON-OFF	ON	ON
Shocks delivered	OFF-All shocks-Inefficient shock-Inefficient max shock	All shocks	All shocks
ATP delivered	ON-OFF	ON	ON

Other alerts	Values	Nominal value	"As shipped" value
MRI notifications (1)	ON-OFF	ON	ON
Asynchronous mode	ON-OFF	ON	ON

(1) For this model, MRI is contraindicated.

22. NON PROGRAMMABLE PARAMETERS

Interval	Values
Committed period (ms)	95 (± 5 ms)

Atrial refractory periods	Values
Post atrial sensing (ms)	47 (± 16 ms)
Post atrial pacing (ms)	109 (± 4 ms)

Ventricular refractory periods	Values
Post ventricular sensing (ms)	95 (± 16 ms)
Post ventricular pacing (ms)	220 (± 4 ms)
Post atrial pacing (blanking) (ms)	16 (± 3 ms)

Tachycardia criteria	Values
Window of PR association (ms)	63 (± 1 ms)

Therapies	Values
Waveform (1)	Constant tilt (50% - 50%)
Stored energy for the Max. shock (J)	42
Pacing amplitude during ATP therapies	7 V (Actual value at 300 ms: 5.3 V)

(1) The device has 50% tilt in each phase thus delivers 94% of stored energy. Each phase is limited to 10 ms duration.

Pacing/Sensing	Values
A pacing polarity	Bipolar
A sensing polarity	Bipolar
RV pacing polarity	Bipolar
RV sensing polarity	Bipolar

Autothreshold Parameters	Values
A Max Amplitude (V)	5
RV Max Amplitude (V)	6
RV Max Rate (ppm)	100
RV Start Time	00am-06am-12pm-06pm
LV Max Rate (ppm)	100

23. LIMITED WARRANTY

ENERGYA implantable cardioverter defibrillator is the result of highly advanced research and all components have been selected after exhaustive testing.

The terms of the limited warranty are available upon request from your MicroPort representative.

24. PATENTS

The ENERGYA model described in this manual is covered by the following US patents:

7 065 402, 7 072 716, 7 076 297, 7 113 826, 7 142 924, 7 164 946, 7 251 526, 7 366 566, 7 400 922, 7 953 483, 8 064 992, 8 043 225, 7 792 582, 8 798 748, 7 890 168, 8 195 293, 7 966 068, 8 768 464, 8 874 209, 8 554 313, 8 214 036, 8 233 981, 8 554 319, 7 966 065, 8 253 279, 8 874 210, 8 219 193, 8 391 976, 8 855 764, 8 359 096, 8 494 629, 8 359 091, 8 489 188, 8 712 526, 8 862 230, 8 641 436, 8 718 765, 8 798 771, 8 868 170, 8 678 843 , 8 694 098, 8 938 286, 8 874 212, 9 014 805, 9 014 806, 9 026 210, 9 084 899, 9 089 284, 9 089 711, 9 186 500, 9 205 267, 9 227 049, 9 247 888, 9 259 581, 9 272 146, 9 272 149, 9 283 393, 9 314 636, 8 805 486, 9 504 835, 9 446 256, 9 498 630, 9 474 456, 9 668 659, 9 668 660, 9 700 727, 9 943 693, 10 016 168, 10 441 797.

25. EXPLANATION OF SYMBOLS

List of applicable symbols for High-voltage MicroPort devices.

General symbols	Explanation of symbols
	Use by
	Date of manufacture
	Manufacturer
REF	Catalogue number
SN	Serial number
	Implantable device uncoated
UDI	Unique device identifier
	Double entry package with external single sterile barrier system
	Federal Communications commission
	Package content
	Sterile package content
	Open here
	Do not use if the package is damaged
	Do not reuse
STERILIZE	Do not resterilize
STERILE EO	Sterilised using ethylene oxide

General symbols	Explanation of symbols
	Temperature limitation
	Screwdriver
	Basic rate
microportmanuals.com	Instructions for use on the website
	This icon is used to call your attention to a particularly important point.
	This icon alerts you to a hazard that may result in equipment damage or personal injury. Carefully read the instructions provided with this icon.

Defibrillator symbols	Explanation of symbols
	ICD (CRT-D, RA, RV, LV)
	ICD (dual chamber, RA, RV)
	ICD (single chamber, RV)
RV, DF-1 RA, IS-1 SVC, DF-1 LV, IS-1 RV, IS-1	CRT-D DF-1 connectors
RV, DF-1 RA, IS-1 SVC, DF-1 RV, IS-1	DR DF-1 connectors
RV, DF-1 SVC, DF-1 RV, IS-1	VR DF-1 connectors
LV, IS-1 RA, IS-1 SVC, DF-1 RV, DF-1 RV, IS-1	CRT-D DF-1 connectors

Defibrillator symbols	Explanation of symbols
SVC, DF-1 RA, IS-1 RV, DF-1 RV, IS-1	DR DF-1 connectors
SVC, DF-1 RV, DF-1 RV, IS-1	VR DF-1 connectors
RA, IS-1 LV, IS-1 RV, DF4-LLHH	CRT-D DF4 (IS-1) connectors
RA, IS-1 RV, DF4-LL	DR DF4 (IS-1) connectors
RV, DF4-LLHH	VR DF4 connector
RA, IS-1 LV, IS4-LLLL RV, DF4-LLHH	CRT-D DF4 (IS4) connectors
	Shocks
ATP	ATP Anti-tachycardia pacing, RV, LV
ATP	ATP Anti-tachycardia pacing, RV

Defibrillator symbols	Explanation of symbols
	High voltage
DF-1	High voltage DF-1 connector compatible with DF-1 standard compliant lead
DF4	High voltage DF4 connector compatible with DF4-LLHO or DF4-LLHH standard compliant lead
IS4	Low voltage IS4 connector compatible with IS4-LLLL standard compliant lead
Bluetooth®	Bluetooth
DF-1	DF-1 defibrillating connector insulating plug

Last revision date of this manual: 2024-03

MicroPort CRM S.r.l.
Via Crescentino s.n.
13040 Saluggia (VC)
Italy
Tel: +39 0161 487095
US Phone: 877.663.7674

www.microport.com

FOR US ONLY - CAUTION: FEDERAL LAW RESTRICTS THIS DEVICE TO SALE BY OR ON THE ORDER OF A PHYSICIAN

2024-03
UA15210A

MicroPort