FCC Test Report

Report No.:	RF181101E04A
FCC ID:	YSI-NMR2
Test Model:	SensOn3x
Received Date:	Mar. 12, 2020
Test Date:	Mar. 25 to May 12, 2020
Issued Date:	May 12, 2020
Applicant:	Delta Mobile Systems
Address:	645 Tollgate Road, Suite 300 Elgin IL 60123 United States Of America
Issued By:	Bureau Veritas Consumer Products Services (H.K.) Ltd., Taoyuan Branch Hsin Chu Laboratory
Lab Address:	E-2, No.1, Li Hsin 1st Road, Hsinchu Science Park, Hsinchu City 300, Taiwan
Test Location:	E-2, No.1, Li Hsin 1st Road, Hsinchu Science Park, Hsinchu City 300, Taiwan
FCC Registration / Designation Number:	723255 / TW2022

This report is for your exclusive use. Any copying or replication of this report to or for any other person or entity, or use of our name or trademark, is permitted only with our prior written permission. This report sets forth our findings solely with respect to the test samples identified herein. The results set forth in this report are not indicative or representative of the quality or characteristics of the lot from which a test sample was taken or any similar or identical product unless specifically and expressly noted. Our report includes all of the tests requested by you and the results thereof based upon the information that you provided to us. You have 60 days from date of issuance of this report to notify us of any material error or omission caused by our negligence, provided, however, that such notice shall be in writing and shall specifically address the issue you wish to raise. A failure to raise such issue within the prescribed time shall constitute your unqualified acceptance of the completeness of this report, the tests conducted and the correctness of the report contents. Unless specific mention, the uncertainty of measurement has been explicitly taken into account to declare the compliance or non-compliance to the specification. The report must not be used by the client to claim product certification, approval, or endorsement by TAF or any government agencies.

Table of Contents

Release Control Record 3

1 Certificate of Conformity 4

2 Summary of Test Results 5

2.1 Measurement Uncertainty 5
2.2 Modification Record 5

3 General Information 6

3.1 General Description of EUT 6
3.2 Description of Test Modes 6
3.2.1 Test Mode Applicability and Tested Channel Detail 7
3.3 Description of Support Units 8
3.3.1 Configuration of System under Test 8
3.4 General Description of Applied Standards and references 9

4 Test Types and Results 10

4.1 Radiated Power and Unwanted Emission Measurement 10
4.1.1 Limits of Radiated Power and Unwanted Emission Measurement 10
4.1.2 Test Instruments 11
4.1.3 Test Procedures 14
4.1.4 Deviation from Test Standard 16
4.1.5 Test Setup 16
4.1.6 EUT Operating Conditions 18
4.1.7 Test Results (Mode 1) 19
4.1.8 Test Results (Mode 2) 26
4.2 Modulation characteristics Measurement 33
4.3 Occupied Bandwidth Measurement 34
4.3.1 Test Setup 34
4.3.2 Test Instruments 34
4.3.3 Test Procedure 34
4.3.4 Deviation from Test Standard 34
4.3.5 EUT Operating Conditions 34
4.3.6 Test Results (Mode 1) 35
4.3.7 Test Results (Mode 2) 36
4.4 Frequency Stability Measurement 37
4.4.1 Limits of Conducted Emission Measurement 37
4.4.2 Test Instruments 37
4.4.3 Test Procedure 37
4.4.4 Test Setup 38
4.4.5 Test Results (Mode 1) 38
4.4.6 Test Results (Mode 2) 39

5 Pictures of Test Arrangements 40

Appendix – Information of the Testing Laboratories 41

Release Control Record

Issue No.	Description	Date Issued
RF181101E04A	Original release.	May 12, 2020

1 Certificate of Conformity

Product: SensOn3x

Brand: SensOn3x

Test Model: SensOn3x

Sample Status: ENGINEERING SAMPLE

Applicant: Delta Mobile Systems

Test Date: Mar. 25 to May 12, 2020

Standards: 47 CFR FCC Part 95, Subpart M
ANSI C63.10:2013

The above equipment has been tested by **Bureau Veritas Consumer Products Services (H.K.) Ltd., Taoyuan Branch**, and found compliance with the requirement of the above standards. The test record, data evaluation & Equipment Under Test (EUT) configurations represented herein are true and accurate accounts of the measurements of the sample's EMC characteristics under the conditions specified in this report.

Prepared by : Vivian Huang , **Date:** May 12, 2020
Vivian Huang / Specialist

Approved by : , **Date:** May 12, 2020
Clark Lin / Technical Manager

2 Summary of Test Results

47 CFR FCC Part 95, Subpart M			
FCC Clause	Test Item	Result	Remarks
95.3367 (a)/(b)	Equivalent Isotropically Radiated Power (EIRP)Test	PASS	Meet the requirement of limit.
95.3379(a)	Unwanted Emission Test	PASS	Meet the requirement of limit.
95.3379(b)	Frequency Stability Test	PASS	Meet the requirement of limit.
2.1049	Occupied Bandwidth Measurement	PASS	Meet the requirement of limit.
2.1047	Modulation characteristics	PASS	Meet the requirement

2.1 Measurement Uncertainty

Where relevant, the following measurement uncertainty levels have been estimated for tests performed on the EUT as specified in CISPR 16-4-2:

Measurement	Frequency	Expanded Uncertainty (k=2) (±)
Radiated Emissions up to 1 GHz	30MHz ~ 1GHz	4.8 dB
Radiated Emissions above 1 GHz	1GHz ~ 6GHz	5.0 dB
	6GHz ~ 18GHz	4.9 dB
	18GHz ~ 40GHz	5.2 dB

2.2 Modification Record

There were no modifications required for compliance.

3 General Information

3.1 General Description of EUT

Product	SensOn3x
Brand	SensOn3x
Test Model	SensOn3x
Status of EUT	ENGINEERING SAMPLE
Power Supply Rating	12Vdc
Modulation Type	FMCW
Operating Frequency	76.050 ~ 76.820GHz, 77~81GHz
Emission designator	3G87MF1N
Antenna Type	Refer to Note
Antenna Connector	Refer to Note
Accessory Device	NA
Data Cable Supplied	NA

Note:

1. This report is prepared for FCC class II permissive change. The difference compared with the Report No.: RF181101E04 as the following:
   - F/W changed, others are the same as original (Original: 76.025 - 76.975GHz; Updated: 76.050 - 76.820GHz)
   - Added operating frequency: 77~81GHz
   - Updated antenna frequency range as below table list:

Original			
Antenna Type	Antenna Gain (dBi)	Connector Type	Frequency range (GHz)
Printed Patch Array	10	none	76 ~ 77
Newly			
Antenna Type	Antenna Gain (dBi)	Connector Type	Frequency range (GHz)
Printed Patch Array	10	none	76 ~ 81

2. The above EUT information is declared by manufacturer and for more detailed features description, please refer to the manufacturer's specifications or user's manual.

3.2 Description of Test Modes

Frequency range is 76.050 ~ 76.820GHz, 77~81GHz provided for test.

3.2.1 Test Mode Applicability and Tested Channel Detail

EUT CONFIGURE MODE	APPLICABLE TO				DESCRIPTION
	RE≥1G	RE<1G	FS	OB	
1	√	√	√	√	76.453 GHz
2	√	√	√	√	79 GHz

Where **RE≥1G:** Radiated Emission above 1GHz & Bandedge Measurement **RE<1G:** Radiated Emission below 1GHz

FS: Frequency Stability **OB:** Occupied Bandwidth measurement

NOTE: The EUT had been pre-tested on the positioned of each 3 axis. The worst case was found when positioned on **Z-plane (below 1GHz) & Y-plane (above 1GHz).**

Test Condition:

APPLICABLE TO	ENVIRONMENTAL CONDITIONS	INPUT POWER	TESTED BY
RE≥1G	23deg. C, 66%RH 24deg. C, 67%RH 23deg. C, 62%RH	DC 12V	Tom Yang Weiwei Lo
RE<1G	22deg. C, 63%RH	DC 12V	Tom Yang
FS	23deg. C, 62%RH	DC 12V	Weiwei Lo
OB	23deg. C, 62%RH	DC 12V	Weiwei Lo

3.3 Description of Support Units

The EUT has been tested as an independent unit together with other necessary accessories or support units. The following support units or accessories were used to form a representative test configuration during the tests.

ID	Product	Brand	Model No.	Serial No.	FCC ID	Remarks
A.	Adapter	MEAN WELL	GST60A12	EB7A516259	NA	Supplied by client
B.	Test Tool	NA	NA	NA	NA	Supplied by client
C.	Controller	Delta Mobile Systems , Inc.	NA	AC71808220003	NA	Supplied by client

Note:

1. All power cords of the above support units are non-shielded (1.8m).

ID	Descriptions	Qty.	Length (m)	Shielding (Yes/No)	Cores (Qty.)	Remarks
1.	Signal Cable	1	0.65	No	0	Supplied by client
2.	Signal Cable	1	4	No	0	Supplied by client
3.	Signal Cable	1	0.12	No	0	Supplied by client
4.	DC Cable	1	1.1	No	1	Supplied by client
5.	AC Cable	1	1.5	No	0	Supplied by client
6.	Signal Cable	1	0.2	No	0	Supplied by client

3.3.1 Configuration of System under Test

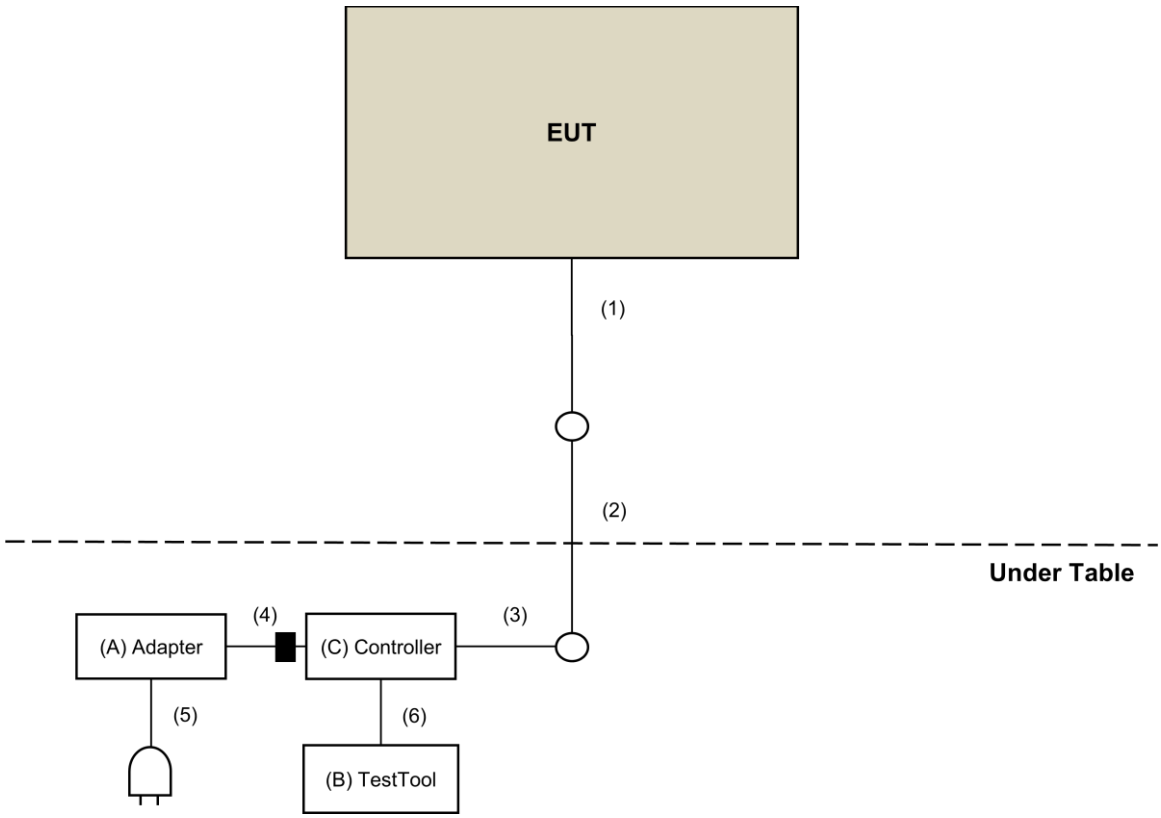

3.4 General Description of Applied Standards and references

The EUT is a RF Product. According to the specifications of the manufacturer, it must comply with the requirements of the following standards and references:

Test standard:

FCC Part 95, Subpart M

ANSI 63.10-2013

All test items have been performed and recorded as per the above standards.

References Test Guidance:

KDB 653005 D01 76-81 GHz Radars v01r01
All test items have been performed as a reference to the above KDB test guidance.

4 Test Types and Results

4.1 Radiated Power and Unwanted Emission Measurement

4.1.1 Limits of Radiated Power and Unwanted Emission Measurement

According to 95.3367 the field strength of emissions from intentional radiators operated under these frequencies bands shall not exceed the following:

Fundamental Frequency (GHz)	Equivalent Isotropically Radiated Power (EIRP)	
	Peak	Average
76 ~ 81	55 dBm/MHz	50 dBm

According to 95.3379 the power density of any emissions outside the 76-81 GHz band shall consist solely of spurious emissions and shall not exceed the following:
(1) Radiated emissions below 40 GHz shall not exceed the field strength as shown in the following emissions table.

Frequencies (MHz)	Field strength (microvolts/meter)	Measurement distance (meters)
0.009-0.490	2400/F(kHz)	300
0.490-1.705	24000/F(kHz)	30
1.705-30.0	30	30
30-88	100	3
88-216	150	3
216-960	200	3
Above 960	500	3

NOTE:

1. The tighter limit applies at the band edges.
2. The limits are based on the frequency of the unwanted emissions and not the fundamental frequency. However, the level of any unwanted emissions shall not exceed the level of the fundamental frequency.
3. The emissions limits are based on measurements employing a CISPR quasi-peak detector except for the frequency bands 9.0-90.0 kHz, 110.0-490.0 kHz, and above 1000 MHz. Radiated emissions limits in these three bands are based on measurements employing an average detector.

(2) The power density of radiated emissions outside the 76-81 GHz band above 40.0 GHz shall not exceed the following, based on measurements employing an average detector with a 1 MHz RBW:

(i) For radiated emissions outside the 76-81 GHz band between 40 GHz and 200 GHz from field disturbance sensors and radar systems operating in the 76-81 GHz band: 600 pW/cm^2 at a distance of 3 meters from the exterior surface of the radiating structure.

(ii) For radiated emissions above 200 GHz from field disturbance sensors and radar systems operating in the 76-81 GHz band: 1000 pW/cm2 at a distance of 3 meters from the exterior surface of the radiating structure.

(3) For field disturbance sensors and radar systems operating in the 76-81 GHz band, the spectrum shall be investigated up to 231.0 GHz.

4.1.2 Test Instruments

Below 40GHz test:

DESCRIPTION & MANUFACTURER	MODEL NO.	SERIAL NO.	CALIBRATED DATE	CALIBRATED UNTIL
Test Receiver ESR7 R&S	ESR7	102026	Apr. 24, 2019	Apr. 23, 2020
Spectrum Analyzer Keysight	N9030B	MY57141948	May 25, 2019	May 24, 2020
Pre-Amplifier EMCI	EMC330N	980538	Apr. 30, 2019	Apr. 29, 2020
Trilog Broadband Antenna SCHWARZBECK	VULB9168	9168-0842	Nov. 08, 2019	Nov. 07, 2020
RF Cable	8D	966-5-1	May 03, 2019	May 02, 2020
RF Cable	8D	966-5-2	May 03, 2019	May 02, 2020
RF Cable	8D	966-5-3	May 03, 2019	May 02, 2020
Fixed attenuator Mini-Circuits	UNAT-5+	PAD-ATT5-02	Jan. 14, 2020	Jan. 13, 2021
Horn_Antenna SCHWARZBECK	BBHA 9120D	9120D-1819	Nov. 24, 2019	Nov. 23, 2020
Pre-Amplifier EMCI	EMC12630SE	980509	May 03, 2019	May 02, 2020
RF Cable EMCI	EMC104-SM-SM-1500	180503	May 03, 2019	May 02, 2020
RF Cable EMCI	EMC104-SM-SM-2000	180501	May 03, 2019	May 02, 2020
RF Cable EMCI	EMC104-SM-SM-6000	180505	May 03, 2019	May 02, 2020
Pre-Amplifier EMCI	EMC184045SE	980387	Jan. 15, 2020	Jan. 14, 2021
Horn_Antenna SCHWARZBECK	BBHA 9170	BBHA9170519	Nov. 24, 2019	Nov. 23, 2020
RF Cable	EMC102-KM-KM-1200	160924	Jan. 15, 2020	Jan. 14, 2021
RF Cable	EMC-KM-KM-4000	200214	Mar. 11, 2020	Mar. 10, 2021
Software	ADT_Radiated_V8.7.08	NA	NA	NA
Boresight Antenna Tower & Turn Table Max-Full	MF-7802BS	MF780208530	NA	NA

Note:

1. The calibration interval of the above test instruments is 12 months and the calibrations are traceable to NML/ROC and NIST/USA.
2. The test was performed in 966 Chamber No. 5.
3. Loop antenna was used for all emissions below 30 MHz.
4. Tested Date: Mar. 25 to 26, 2020

Above 40GHz test:

DESCRIPTION & MANUFACTURER	MODEL NO.	SERIAL NO.	CALIBRATED DATE	CALIBRATED UNTIL
Spectrum Analyzer Keysight	N9030A	MY55330160	Feb. 07, 2020	Feb. 06, 2021
*Horn Antenna (33~55GHz) OML	M22RH	110215-1	Oct. 17, 2017	Oct. 16, 2020
*Horn Antenna (50~75GHz) OML	M15HWD	110215-1	Oct. 17, 2017	Oct. 16, 2020
*Horn Antenna (75~110GHz) OML	M10RH	110215-1	Oct. 17, 2017	Oct. 16, 2020
*Horn Antenna(110~170GHz) OML	M06HWD	110215-1	Oct. 17, 2017	Oct. 16, 2020
*Horn Antenna (140~220GHz) OML	M05RH	110215-1	Oct. 17, 2017	Oct. 16, 2020
*Horn Antenna (220~325GHz) OML	M03RH	M03RH_140508-1	Oct. 17, 2017	Oct. 16, 2020
Conical Horn Antenna (75~110GHz) Keysight	WR10CH-Conical	WR10CH_001	CoC	CoC
N9029AV15-DC9 - 50-75 GHz VDI Standard Downconverter with 9VDC supply Keysight	SA Extension WR15	SAX 381	CoC	CoC
N9029AV10-DC9 - 75-110 GHz VDI Standard Downconverter with 9VDC supply Keysight	SA Extension WR10	SAX 378	CoC	CoC
N9029AV06-DC9 - 110-170 GHz VDI Standard Downconverter with 9VDC supply Keysight	SA Extension WR6.5	SAX 377	CoC	CoC
N9029AV05-DC9 - 140-220 GHz VDI Standard Downconverter with 9VDC supply Keysight	SA Extension WR5.1	SAX 375	CoC	CoC
N9029AV03-DC9 - 220-330 GHz VDI Standard Downconverter with 9VDC supply Keysight	SA Extension	SAX 376	CoC	CoC
*Millimeter-Wave Signal Generator Frequency Extension Module (50~75 GHz) Keysight	E8257DV15	SGX 050	CoC	CoC
*Millimeter-Wave Signal Generator Frequency Extension Module (75~110 GHz) Keysight	E8257DV10	SGX 069	CoC	CoC
*Millimeter-Wave Signal Generator Frequency Extension Module (110~170 GHz) Keysight	E8257DV06-DC9	SGX 223	CoC	CoC
PSG analog signal generator Keysight	E8257D	MY53401987	June 21, 2019	June 20, 2020
Antenna Tower & Turn Table Max-Full	MF-7802	MF780208406	NA	NA
Boresight Antenna Fixture	FBA-01	FBA-SIP01	NA	NA

Note:

1. The calibration interval of the above test instruments is 12 months and the calibrations are traceable to NML/ROC and NIST/USA.
2. *The calibration interval of the above test instruments is 36 months and the calibrations are traceable to NML/ROC and NIST/USA.
3. Certificate of Conformance (CoC) which is issued by manufacturer states that the product meets the specification.
4 The test was performed in 966 Chamber No. 3
5 Tested Date: Apr. 07 to 23, 2020

4.1.3 Test Procedures

For Radiated emission: Below 30 MHz

a. The EUT was placed on the top of a rotating table 0.8 meters above the ground at a 3 meter chamber room. The table was rotated 360 degrees to determine the position of the highest radiation.

b. The EUT was set 3 meters away from the interference-receiving antenna, which was mounted on the top of a variable-height antenna tower.

c. Parallel, perpendicular, and ground-parallel orientations of the antenna are set to make the measurement.

d. For each suspected emission, the EUT was arranged to its worst case and the rotatable table was turned from 0 degrees to 360 degrees to find the maximum reading.

e. The test-receiver system was set to Quasi-Peak Detect Function and Specified Bandwidth with Maximum Hold Mode.

NOTE:

1. The resolution bandwidth and video bandwidth of test receiver/spectrum analyzer is 9kHz at frequency below 30MHz.

For Radiated emission: 30 MHz ~ 40GHz

a. The EUT was placed on the top of a rotating table 0.8 meters (for 30MHz ~ 1GHz) / 1.5 meters (for above 1GHz) above the ground at 3 meter chamber room for test. The table was rotated 360 degrees to determine the position of the highest radiation.

b. The EUT was set 3 meters away from the interference-receiving antenna, which was mounted on the top of a variable-height antenna tower.

c. The height of antenna is varied from one meter to four meters above the ground to determine the maximum value of the field strength. Both horizontal and vertical polarizations of the antenna are set to make the measurement.

d. For each suspected emission, the EUT was arranged to its worst case and then the antenna was tuned to heights from 1 meter to 4 meters and the rotatable table was turned from 0 degrees to 360 degrees to find the maximum reading.

e. The test-receiver system was set to quasi-peak detect function and specified bandwidth with maximum hold mode when the test frequency is below 1 GHz.

f. The test-receiver system was set to peak and average detect function and specified bandwidth with maximum hold mode when the test frequency is above 1 GHz. If the peak reading value also meets average limit, measurement with the average detector is unnecessary.

Note:

1. The resolution bandwidth and video bandwidth of test receiver/spectrum analyzer is 120kHz for Quasi-peak detection (QP) at frequency below 1GHz.
2. The resolution bandwidth is 1MHz and video bandwidth of test receiver/spectrum analyzer is 3MHz for Peak detection (PK) at frequency from 1GHz to 40GHz.
3. The resolution bandwidth is 1MHz and video bandwidth of test receiver/spectrum analyzer is 3MHz for Average detection (AV) at frequency from 1GHz to 40GHz.
4. All modes of operation were investigated and the worst-case emissions are reported.

For Radiated emission: Above 40GHz

External mixers are utilized.

a. The EUT was placed on the top of a rotating table 1.5 meters above the ground at a 3 meters chamber room. The table was rotated 360 degrees to determine the position of the highest radiation.

b. The distance at which limits are typically specified is 3 meter; however, closer measurement distances may be utilized.

c. Begin handheld measurements with the test antenna (horn) at a distance of 1 meter from the EUT, in a horizontally polarized position. Slowly adjust its position, entirely covering the plane 1 meter from the EUT.

d. Repeat (b) with the horn in a vertically polarized position.

e. If the emission cannot be detected at 1 meter, reduce the RBW in order to increase system sensitivity. Note the value. If the emission still cannot be detected, move the horn closer to the EUT, noting the distance at which a measurement is made.

f. Note the maximum level indicated on the Spectrum Analyzer.

g. Based on the distance at which the measurement was made and the calculated distance to the edge of the far field, determine the appropriate distance attenuation factor. Apply this factor to the calculated field strength in order to determine the equivalent field strength at the distance at which the regulatory limit is specified. Compare to the appropriate limits

h. Repeat (a) - (f) for every emission that must be measured, up through the required frequency range of investigation

NOTE:

1. The resolution bandwidth is 1MHz and video bandwidth of test receiver/spectrum analyzer is 3MHz for Average detection at frequency above 40GHz.

For Fundamental Frequency

a. Substitution method is used for EIRP measurement. In the semi-anechoic chamber, EUT placed on the 1.5m height of Turn Table, rotated the table around 360 degrees to search the maximum radiation power and receiver antenna shall be rotated vertical and horizontal polarization and moved height from 1m to 4m to find the maximum polar radiated power. The “Read Value” is the spectrum reading the maximum power value.

b. The substitution horn antenna is substituted for EUT at the same position and signals generator export the CW signal to the substitution antenna. Rotated the Turn Table and moved receiving antenna to find the maximum radiation power. Adjust output power level of S.G to get a Value of spectrum reading equal to “Read Value”. Record the power level of S.G.

c. EIRP = Output power level of S.G + Antenna gain

NOTE:

1. The resolution bandwidth is 1MHz and video bandwidth of test receiver/spectrum analyzer is 3MHz for Peak and Average detection for fundamental emission.

4.1.4 Deviation from Test Standard

No deviation.

4.1.5 Test Setup

For Radiated emission below 30MHz

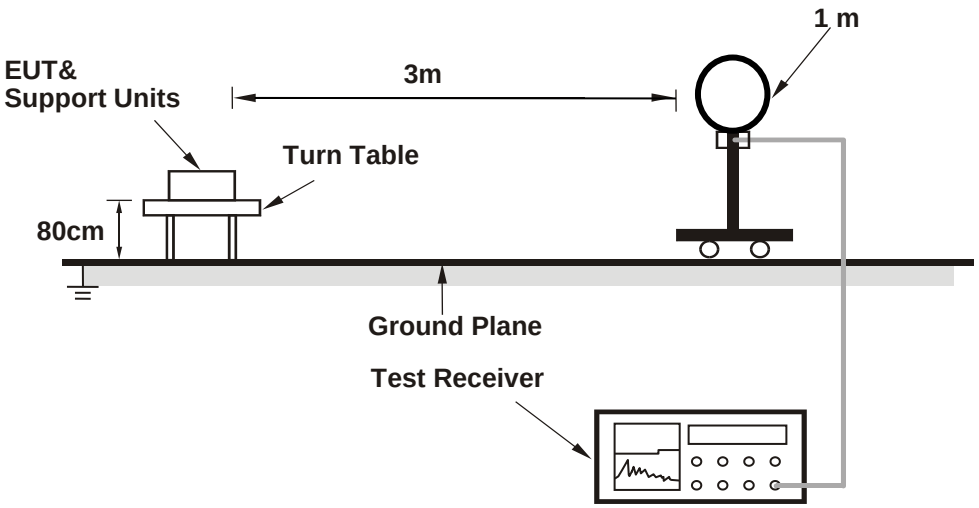

For Radiated emission 30MHz to 1GHz

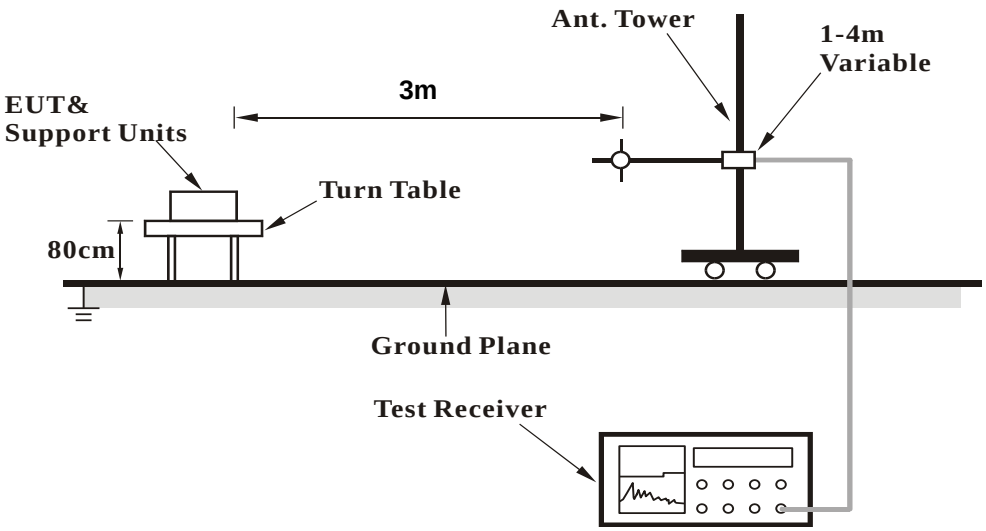

For Radiated emission 1GHz to 40GHz

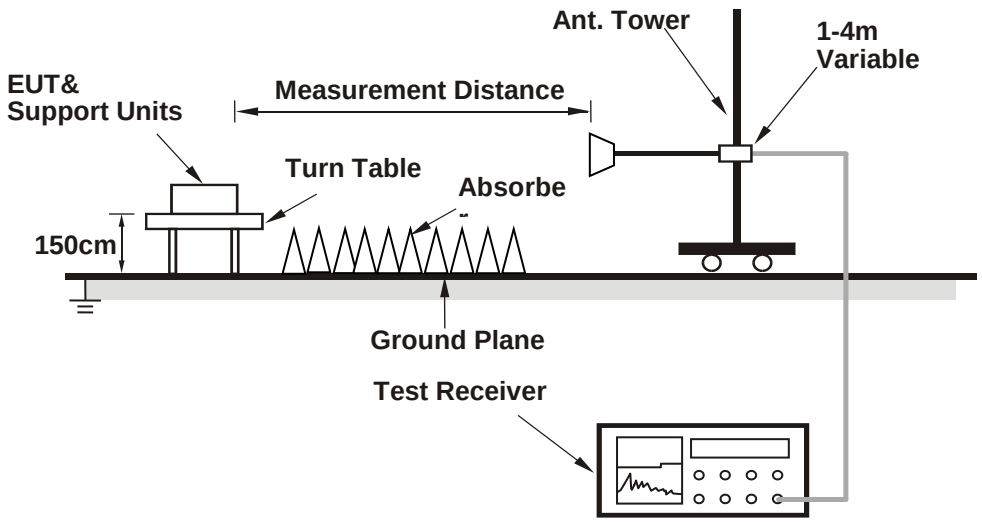

Frequency Range above 40GHz

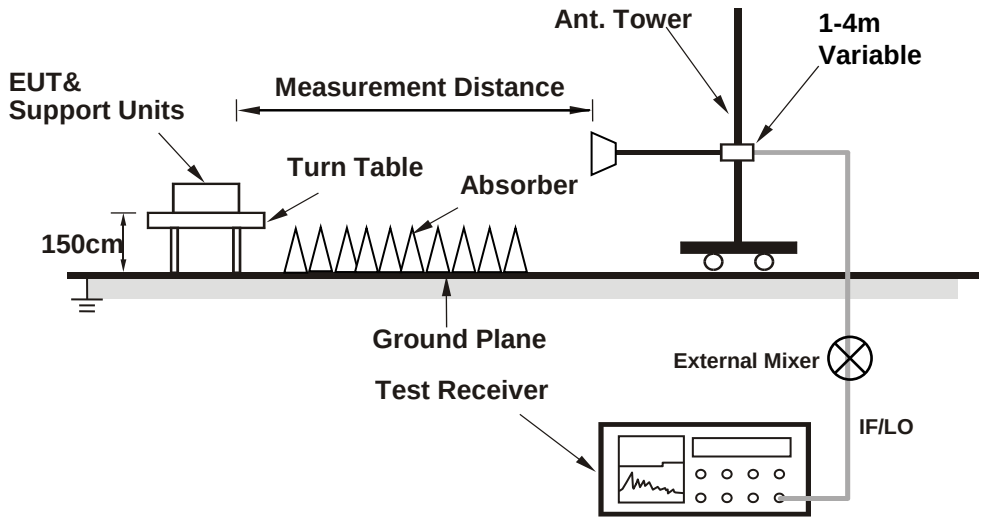

EIRP Test Setup for Fundamental Frequency

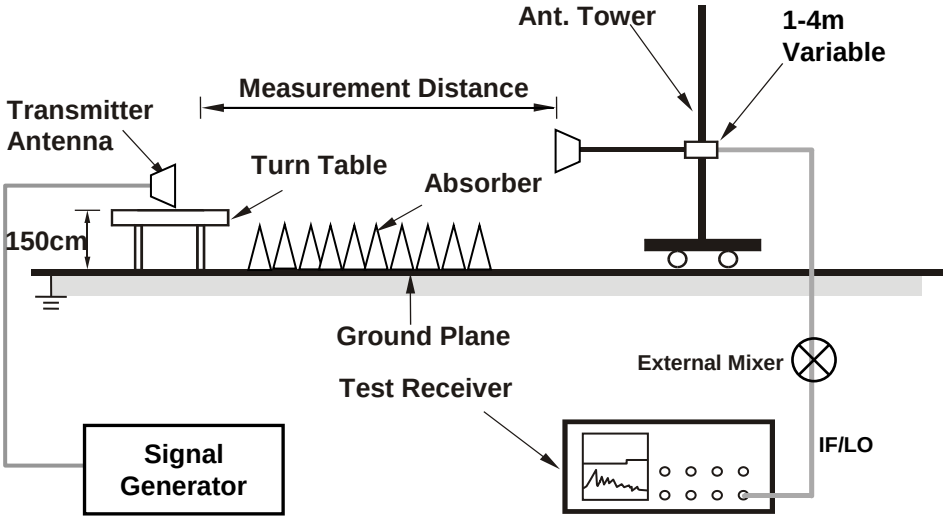

For the actual test configuration, please refer to the attached file (Test Setup Photo).

4.1.6 EUT Operating Conditions

Set the EUT under transmission condition continuously at specific channel frequency.

4.1.7 Test Results (Mode 1)

Above 1GHz Data

FREQUENCY RANGE	1GHz ~ 18GHz	DETECTOR FUNCTION	Peak (PK) Average (AV)

ANTENNA POLARITY & TEST DISTANCE: HORIZONTAL AT 3 M								
NO.	FREQ. (MHz)	EMISSION LEVEL (dBuV/m)	LIMIT (dBuV/m)	MARGIN (dB)	ANTENNA HEIGHT (m)	TABLE ANGLE (Degree)	RAW VALUE (dBuV)	CORRECTION FACTOR (dB/m)
1	#1763.30	39.4 PK	74.0	-34.6	1.00 H	360	45.2	-5.8
2	#1763.30	30.1 AV	54.0	-23.9	1.00 H	360	35.9	-5.8
3	8145.95	45.0 PK	74.0	-29.0	2.00 H	26	37.2	7.8
4	8145.95	34.6 AV	54.0	-19.4	2.00 H	26	26.8	7.8
5	#14400.25	54.2 PK	74.0	-19.8	2.00 H	360	39.8	14.4
6	#14400.25	40.7 AV	54.0	-13.3	2.00 H	360	26.3	14.4
ANTENNA POLARITY & TEST DISTANCE: VERTICAL AT 3 M								
NO.	FREQ. (MHz)	EMISSION LEVEL (dBuV/m)	LIMIT (dBuV/m)	MARGIN (dB)	ANTENNA HEIGHT (m)	TABLE ANGLE (Degree)	RAW VALUE (dBuV)	CORRECTION FACTOR (dB/m)
1	4812.25	40.4 PK	74.0	-33.6	2.00 V	190	39.4	1.0
2	4812.25	30.1 AV	54.0	-23.9	2.00 V	190	29.1	1.0
3	9482.15	46.6 PK	74.0	-27.4	1.00 V	288	36.4	10.2
4	9482.15	37.8 AV	54.0	-16.2	1.00 V	288	27.6	10.2
5	#14400.22	54.9 PK	74.0	-19.1	2.00 V	360	40.5	14.4
6	#14400.22	40.5 AV	54.0	-13.5	2.00 V	360	26.1	14.4

REMARKS:

1. Emission Level(dBuV/m) = Raw Value(dBuV) + Correction Factor(dB/m)
2. Correction Factor(dB/m) = Antenna Factor(dB/m) + Cable Factor(dB) – Pre-Amplifier Factor(dB)
3. Margin value = Emission Level – Limit value
4. The other emission levels were very low against the limit.
5. " # ": The radiated frequency is out of the restricted band.

FREQUENCY RANGE	18GHz ~ 40GHz	DETECTOR FUNCTION	Peak (PK) Average (AV)

ANTENNA POLARITY & TEST DISTANCE: HORIZONTAL AT 3 M								
NO.	FREQ. (MHz)	EMISSION LEVEL (dBuV/m)	LIMIT (dBuV/m)	MARGIN (dB)	ANTENNA HEIGHT (m)	TABLE ANGLE (Degree)	RAW VALUE (dBuV)	CORRECTION FACTOR (dB/m)
1	19550.00	34.6 PK	74.0	-39.4	3.20 H	195	50.4	-15.8
2	19550.00	21.6 AV	54.0	-32.4	3.20 H	195	37.4	-15.8
3	#24850.00	34.9 PK	74.0	-39.1	1.62 H	183	46.1	-11.2
4	#24850.00	22.9 AV	54.0	-31.1	1.62 H	183	34.1	-11.2
5	#29560.00	48.3 PK	74.0	-25.7	1.76 H	283	58.7	-10.4
6	#29560.00	36.5 AV	54.0	-17.5	1.76 H	283	46.9	-10.4
ANTENNA POLARITY & TEST DISTANCE: VERTICAL AT 3 M								
NO.	FREQ. (MHz)	EMISSION LEVEL (dBuV/m)	LIMIT (dBuV/m)	MARGIN (dB)	ANTENNA HEIGHT (m)	TABLE ANGLE (Degree)	RAW VALUE (dBuV)	CORRECTION FACTOR (dB/m)
1	20120.00	41.9 PK	74.0	-32.1	1.53 V	321	56.9	-15.0
2	20120.00	27.7 AV	54.0	-26.3	1.53 V	321	42.7	-15.0
3	#21550.00	36.8 PK	74.0	-37.2	1.35 V	263	50.1	-13.3
4	#21550.00	24.3 AV	54.0	-29.7	1.35 V	263	37.6	-13.3
5	#26280.00	44.8 PK	74.0	-29.2	1.46 V	168	55.9	-11.1
6	#26280.00	32.9 AV	54.0	-21.1	1.46 V	168	44.0	-11.1

REMARKS:

1. Emission Level(dBuV/m) = Raw Value(dBuV) + Correction Factor(dB/m)
2. Correction Factor(dB/m) = Antenna Factor(dB/m) + Cable Factor(dB) – Pre-Amplifier Factor(dB)
3. Margin value = Emission Level – Limit value
4. The other emission levels were very low against the limit.
5. " # ": The radiated frequency is out of the restricted band.

FREQUENCY RANGE	40GHz ~ 100GHz	DETECTOR FUNCTION	Peak (PK)

ANTENNA POLARITY: HORIZONTAL						
NO.	Frequency (GHz)	SG Value (dBm/MHz)	Transmitter Antenna Gain (dBi)	EIRP Level (dBm/MHz)	EIRP Limit (dBm/MHz)	PASS/FAIL
1	76.453	-7.889	23.50	15.611 PK	55	PASS
ANTENNA POLARITY: VERTICAL						
NO.	Frequency (GHz)	SG Value (dBm/MHz)	Transmitter Antenna Gain (dBi)	EIRP Level (dBm/MHz)	EIRP Limit (dBm/MHz)	PASS/FAIL
1	76.453	-21.207	23.50	2.293 PK	55	PASS

REMARKS:

1.The measured power level is converted to EIRP using the equation:

EIRP = SG Value + Transmitter Antenna Gain

where:

D is the measurement distance

λ is the wavelength

*Measurements made at 1.8 meter distance.

2. The far-field boundary is given in ANSI 63.10 as:

R far field = (2 * L^2) / λ

L is the Largest Antenna Dimension of either the EUT antenna or measurement antenna, including the reflector

λ is the wavelength

FREQUENCY (GHz)	L (m)	Lambda (m)	R (Far Field) (m)
76.453	0.058	0.00392	1.716

FREQUENCY RANGE	40GHz ~ 100GHz	DETECTOR FUNCTION	Average (AV)

ANTENNA POLARITY: HORIZONTAL								
NO.	Frequency (GHz)	SG Value (dBm/MHz)	Transmitter Antenna Gain (dBi)	EIRP Level (dBm/MHz)	Occupied Bandwidth (MHz)	Total EIRP Power (dBm)	EIRP Limit (dBm)	PASS/FAIL
2	76.453	-28.819	23.5	-5.319 AV	761.66	23.5	50	PASS
		ANTENNA POLARITY: VERTICAL						
NO.	Frequency (GHz)	SG Value (dBm/MHz)	Transmitter Antenna Gain (dBi)	EIRP Level (dBm/MHz)	Occupied Bandwidth (MHz)	Total EIRP Power (dBm)	EIRP Limit (dBm)	PASS/FAIL
2	76.453	-42.240	23.5	-18.740 AV	761.66	10.08	50	PASS

REMARKS:

1.The measured power level is converted to EIRP using the equation:

EIRP = SG Value + Transmitter Antenna Gain

where:

D is the measurement distance

λ is the wavelength

*Measurements made at 1.8 meter distance.

2. Total EIRP power (dBm) = EIRP Level (dBm/MHz) + 10*log(Occupied Bandeidth)(MHz)

3. The far-field boundary is given in ANSI 63.10 as:

R far field = (2 * L^2) / λ

L is the Largest Antenna Dimension of either the EUT antenna or measurement antenna, including the reflector

λ is the wavelength

FREQUENCY (GHz)	L (m)	Lambda (m)	R (Far Field) (m)
76.453	0.058	0.00392	1.716

FREQUENCY RANGE	100GHz ~ 231GHz	DETECTOR FUNCTION	Average (AV)

ANTENNA POLARITY: HORIZONTAL							
NO.	Frequency (GHz)	Raw Value (dBm/MHz)	Receiver Antenna Gain (dBi)	EIRP Level (dBm/MHz)	Power Density (pW/cm^2)	Power Density Limit (pW/cm^2)	PASS/FAIL
1	152.52	-90.310	22.7	-31.796	0.585 AV	600	PASS
2	230.77	-92.360	22.9	-30.449	0.797 AV	1000	PASS
ANTENNA POLARITY: VERTICAL							
NO.	Frequency (GHz)	Raw Value (dBm/MHz)	Receiver Antenna Gain (dBi)	EIRP Level (dBm/MHz)	Power Density (pW/cm^2)	Power Density Limit (pW/cm^2)	PASS/FAIL
1	152.57	-91.710	22.7	-33.193	0.424 AV	600	PASS
2	230.92	-93.760	22.9	-31.844	0.578 AV	1000	PASS

REMARKS:

1.The measured power level is converted to EIRP using the equation:

EIRP = Raw Value - Receiver Antenna Gain + 20*log(4*3.1416*D/λ)

where:

D is the measurement distance

λ is the wavelength

*Measurements made at 1.8 meter distance.

2. The far-field boundary is given in ANSI 63.10 as:

R far field = (2 * L^2) / λ

L is the Largest Antenna Dimension of measurement antenna, including the reflector

λ is the wavelength

FREQUENCY (GHz)	L (m)	Lambda (m)	R (Far Field) (m)
76.453	0.03	0.00392	0.459

Below 1GHz Data

FREQUENCY RANGE	9kHz ~ 1GHz	DETECTOR FUNCTION	Quasi-Peak (QP)

ANTENNA POLARITY & TEST DISTANCE: HORIZONTAL AT 3 M								
NO.	FREQ. (MHz)	EMISSION LEVEL (dBuV/m)	LIMIT (dBuV/m)	MARGIN (dB)	ANTENNA HEIGHT (m)	TABLE ANGLE (Degree)	RAW VALUE (dBuV)	CORRECTION FACTOR (dB/m)
1	30.48	30.2 QP	40.0	-9.8	1.00 H	307	44.4	-14.2
2	122.93	34.1 QP	43.5	-9.4	2.00 H	97	48.7	-14.6
3	190.66	35.2 QP	43.5	-8.3	2.00 H	269	50.9	-15.7
4	269.83	36.2 QP	46.0	-9.8	1.00 H	135	49.3	-13.1
5	317.73	36.6 QP	46.0	-9.4	1.00 H	141	48.2	-11.6
6	393.82	30.0 QP	46.0	-16.0	1.00 H	139	39.8	-9.8

REMARKS:

1. Emission Level(dBuV/m) = Raw Value(dBuV) + Correction Factor(dB/m)
2. Correction Factor(dB/m) = Antenna Factor(dB/m) + Cable Factor(dB) – Pre-Amplifier Factor(dB)
3. Margin value = Emission Level – Limit value
4. The emission levels were very low against the limit of frequency range 9kHz~30MHz: the amplitude of spurious emissions attenuated more than 20 dB below the permissible value to be report.

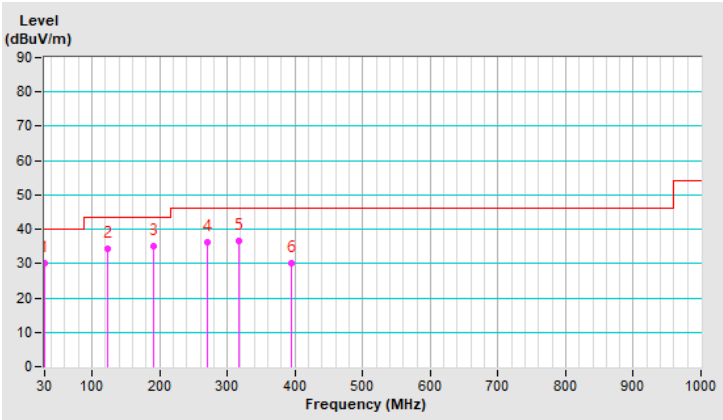

FREQUENCY RANGE	9kHz ~ 1GHz	DETECTOR FUNCTION	Quasi-Peak (QP)

ANTENNA POLARITY & TEST DISTANCE: VERTICAL AT 3 M								
NO.	FREQ. (MHz)	EMISSION LEVEL (dBuV/m)	LIMIT (dBuV/m)	MARGIN (dB)	ANTENNA HEIGHT (m)	TABLE ANGLE (Degree)	RAW VALUE (dBuV)	CORRECTION FACTOR (dB/m)
1	44.19	32.3 QP	40.0	-7.7	1.00 V	0	45.1	-12.8
2	113.52	27.4 QP	43.5	-16.1	1.00 V	211	42.9	-15.5
3	164.66	31.3 QP	43.5	-12.2	1.00 V	158	44.2	-12.9
4	240.73	34.8 QP	46.0	-11.2	1.00 V	58	49.0	-14.2
5	274.12	35.4 QP	46.0	-10.6	2.00 V	196	48.3	-12.9
6	317.80	33.4 QP	46.0	-12.6	2.00 V	167	45.0	-11.6

REMARKS:

1. Emission Level(dBuV/m) = Raw Value(dBuV) + Correction Factor(dB/m)
2. Correction Factor(dB/m) = Antenna Factor(dB/m) + Cable Factor(dB) – Pre-Amplifier Factor(dB)
3. Margin value = Emission Level – Limit value
4. The emission levels were very low against the limit of frequency range 9kHz~30MHz: the amplitude of spurious emissions attenuated more than 20 dB below the permissible value to be report.

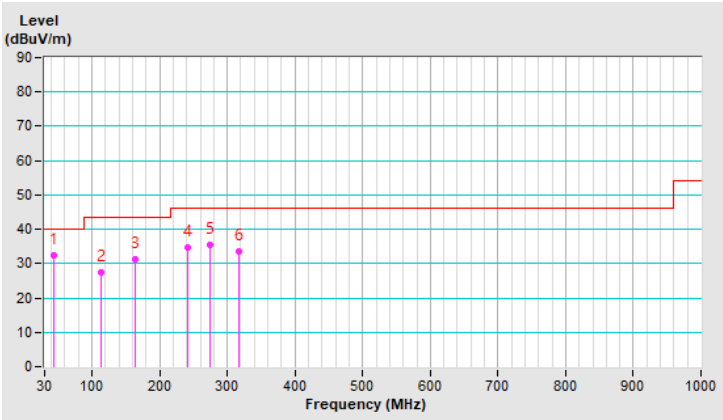

4.1.8 Test Results (Mode 2)

Above 1GHz Data

FREQUENCY RANGE	1GHz ~ 18GHz	DETECTOR FUNCTION	Peak (PK) Average (AV)

ANTENNA POLARITY & TEST DISTANCE: HORIZONTAL AT 3 M								
NO.	FREQ. (MHz)	EMISSION LEVEL (dBuV/m)	LIMIT (dBuV/m)	MARGIN (dB)	ANTENNA HEIGHT (m)	TABLE ANGLE (Degree)	RAW VALUE (dBuV)	CORRECTION FACTOR (dB/m)
1	3834.75	38.3 PK	74.0	-35.7	1.00 H	0	39.2	-0.9
2	3834.75	30.7 AV	54.0	-23.3	1.00 H	0	31.6	-0.9
3	#7783.00	44.8 PK	74.0	-29.2	2.00 H	360	37.4	7.4
4	#7783.00	32.4 AV	54.0	-21.6	2.00 H	360	25.0	7.4
5	11455.00	49.8 PK	74.0	-24.2	1.00 H	16	36.9	12.9
6	11455.00	36.6 AV	54.0	-17.4	1.00 H	16	23.7	12.9
ANTENNA POLARITY & TEST DISTANCE: VERTICAL AT 3 M								
NO.	FREQ. (MHz)	EMISSION LEVEL (dBuV/m)	LIMIT (dBuV/m)	MARGIN (dB)	ANTENNA HEIGHT (m)	TABLE ANGLE (Degree)	RAW VALUE (dBuV)	CORRECTION FACTOR (dB/m)
1	#5564.50	40.0 PK	74.0	-34.0	2.00 V	10	38.4	1.6
2	#5564.50	32.6 AV	54.0	-21.4	2.00 V	10	31.0	1.6
3	10695.95	48.7 PK	74.0	-25.3	2.00 V	354	36.1	12.6
4	10695.95	37.6 AV	54.0	-16.4	2.00 V	354	25.0	12.6
5	#14399.98	55.2 PK	74.0	-18.8	1.50 V	37	40.8	14.4
6	#14399.98	44.6 AV	54.0	-9.4	1.50 V	37	30.2	14.4

REMARKS:

1. Emission Level(dBuV/m) = Raw Value(dBuV) + Correction Factor(dB/m)
2. Correction Factor(dB/m) = Antenna Factor(dB/m) + Cable Factor(dB) – Pre-Amplifier Factor(dB)
3. Margin value = Emission Level – Limit value
4. The other emission levels were very low against the limit.
5. " # ": The radiated frequency is out of the restricted band.

FREQUENCY RANGE	18GHz ~ 40GHz	DETECTOR FUNCTION	Peak (PK) Average (AV)

ANTENNA POLARITY & TEST DISTANCE: HORIZONTAL AT 3 M								
NO.	FREQ. (MHz)	EMISSION LEVEL (dBuV/m)	LIMIT (dBuV/m)	MARGIN (dB)	ANTENNA HEIGHT (m)	TABLE ANGLE (Degree)	RAW VALUE (dBuV)	CORRECTION FACTOR (dB/m)
1	19450.00	33.6 PK	74.0	-40.4	3.10 H	210	49.4	-15.8
2	19450.00	20.8 AV	54.0	-33.2	3.10 H	210	36.6	-15.8
3	#24650.00	35.1 PK	74.0	-38.9	1.82 H	215	46.5	-11.4
4	#24650.00	23.1 AV	54.0	-30.9	1.82 H	215	34.5	-11.4
5	#29150.00	49.2 PK	74.0	-24.8	1.61 H	258	60.3	-11.1
6	#29150.00	37.3 AV	54.0	-16.7	1.61 H	258	48.4	-11.1
ANTENNA POLARITY & TEST DISTANCE: VERTICAL AT 3 M								
NO.	FREQ. (MHz)	EMISSION LEVEL (dBuV/m)	LIMIT (dBuV/m)	MARGIN (dB)	ANTENNA HEIGHT (m)	TABLE ANGLE (Degree)	RAW VALUE (dBuV)	CORRECTION FACTOR (dB/m)
1	20065.00	42.3 PK	74.0	-31.7	1.40 V	301	57.3	-15.0
2	20065.00	28.2 AV	54.0	-25.8	1.40 V	301	43.2	-15.0
3	#21825.00	37.6 PK	74.0	-36.4	1.45 V	218	51.3	-13.7
4	#21825.00	25.6 AV	54.0	-28.4	1.45 V	218	39.3	-13.7
5	#26780.00	45.6 PK	74.0	-28.4	1.42 V	153	56.2	-10.6
6	#26780.00	33.6 AV	54.0	-20.4	1.42 V	153	44.2	-10.6

REMARKS:

1. Emission Level(dBuV/m) = Raw Value(dBuV) + Correction Factor(dB/m)
2. Correction Factor(dB/m) = Antenna Factor(dB/m) + Cable Factor(dB) – Pre-Amplifier Factor(dB)
3. Margin value = Emission Level – Limit value
4. The other emission levels were very low against the limit.
5. " # ": The radiated frequency is out of the restricted band.

FREQUENCY RANGE	40GHz ~ 100GHz	DETECTOR FUNCTION	Peak (PK)

ANTENNA POLARITY: HORIZONTAL						
NO.	Frequency (GHz)	SG Value (dBm/MHz)	Transmitter Antenna Gain (dBi)	EIRP Level (dBm/MHz)	EIRP Limit (dBm/MHz)	PASS/FAIL
1	79	-6.900	23.80	16.900 PK	55	PASS
ANTENNA POLARITY: VERTICAL						
NO.	Frequency (GHz)	SG Value (dBm/MHz)	Transmitter Antenna Gain (dBi)	EIRP Level (dBm/MHz)	EIRP Limit (dBm/MHz)	PASS/FAIL
1	79	-17.147	23.80	6.653 PK	55	PASS

REMARKS:

1.The measured power level is converted to EIRP using the equation:

EIRP = SG Value + Transmitter Antenna Gain

where:

D is the measurement distance

λ is the wavelength

*Measurements made at 1.8 meter distance.

2. The far-field boundary is given in ANSI 63.10 as:

R far field = (2 * L^2) / λ

L is the Largest Antenna Dimension of either the EUT antenna or measurement antenna, including the reflector

λ is the wavelength

FREQUENCY (GHz)	L (m)	Lambda (m)	R (Far Field) (m)
79	0.058	0.0038	1.771

FREQUENCY RANGE	40GHz ~ 100GHz	DETECTOR FUNCTION	Average (AV)

ANTENNA POLARITY: HORIZONTAL								
NO.	Frequency (GHz)	SG Value (dBm/MHz)	Transmitter Antenna Gain (dBi)	EIRP Level (dBm/MHz)	Occupied Bandwidth (MHz)	Total EIRP Power (dBm)	EIRP Limit (dBm)	PASS/FAIL
2	79	-28.578	23.8	-4.778 AV	3935.4	31.17	50	PASS
		ANTENNA POLARITY: VERTICAL						
NO.	Frequency (GHz)	SG Value (dBm/MHz)	Transmitter Antenna Gain (dBi)	EIRP Level (dBm/MHz)	Occupied Bandwidth (MHz)	Total EIRP Power (dBm)	EIRP Limit (dBm)	PASS/FAIL
2	79	-39.102	23.8	-15.302 AV	3935.4	20.65	50	PASS

REMARKS:

1.The measured power level is converted to EIRP using the equation:

EIRP = SG Value + Transmitter Antenna Gain

where:

D is the measurement distance

λ is the wavelength

*Measurements made at 1.8 meter distance.

2. Total EIRP power (dBm) = EIRP Level (dBm/MHz) + 10*log(Occupied Bandeidth)(MHz)

3. The far-field boundary is given in ANSI 63.10 as:

R far field = (2 * L^2) / λ

L is the Largest Antenna Dimension of either the EUT antenna or measurement antenna, including the reflector

λ is the wavelength

FREQUENCY (GHz)	L (m)	Lambda (m)	R (Far Field) (m)
79	0.058	0.0038	1.771

FREQUENCY RANGE	100GHz ~ 231GHz	DETECTOR FUNCTION	Average (AV)

ANTENNA POLARITY: HORIZONTAL							
NO.	Frequency (GHz)	Raw Value (dBm/MHz)	Receiver Antenna Gain (dBi)	EIRP Level (dBm/MHz)	Power Density (pW/cm^2)	Power Density Limit (pW/cm^2)	PASS/FAIL
1	152.34	-90.410	22.7	-31.906	0.57 AV	600	PASS
2	230.39	-92.700	22.9	-30.803	0.735 AV	1000	PASS
ANTENNA POLARITY: VERTICAL							
NO.	Frequency (GHz)	Raw Value (dBm/MHz)	Receiver Antenna Gain (dBi)	EIRP Level (dBm/MHz)	Power Density (pW/cm^2)	Power Density Limit (pW/cm^2)	PASS/FAIL
1	152.16	-91.880	22.7	-33.387	0.405 AV	600	PASS
2	230.59	-94.060	22.9	-32.156	0.538 AV	1000	PASS

REMARKS:

1.The measured power level is converted to EIRP using the equation:

EIRP = Raw Value - Receiver Antenna Gain + 20*log(4*3.1416*D/λ)

where:

D is the measurement distance

λ is the wavelength

*Measurements made at 1.8 meter distance.

2. The far-field boundary is given in ANSI 63.10 as:

R far field = (2 * L^2) / λ

L is the Largest Antenna Dimension of measurement antenna, including the reflector

λ is the wavelength

FREQUENCY (GHz)	L (m)	Lambda (m)	R (Far Field) (m)
79	0.03	0.0038	0.474

Below 1GHz Data

FREQUENCY RANGE	9kHz ~ 1GHz	DETECTOR FUNCTION	Quasi-Peak (QP)

ANTENNA POLARITY & TEST DISTANCE: HORIZONTAL AT 3 M								
NO.	FREQ. (MHz)	EMISSION LEVEL (dBuV/m)	LIMIT (dBuV/m)	MARGIN (dB)	ANTENNA HEIGHT (m)	TABLE ANGLE (Degree)	RAW VALUE (dBuV)	CORRECTION FACTOR (dB/m)
1	30.24	30.8 QP	40.0	-9.2	1.00 H	0	44.9	-14.1
2	120.89	36.2 QP	43.5	-7.3	3.00 H	109	50.9	-14.7
3	195.89	35.5 QP	43.5	-8.0	2.00 H	258	51.5	-16.0
4	285.47	35.4 QP	46.0	-10.6	1.00 H	132	47.9	-12.5
5	318.79	36.3 QP	46.0	-9.7	1.00 H	136	47.9	-11.6
6	393.92	29.6 QP	46.0	-16.4	1.00 H	139	39.4	-9.8

REMARKS:

1. Emission Level(dBuV/m) = Raw Value(dBuV) + Correction Factor(dB/m)
2. Correction Factor(dB/m) = Antenna Factor(dB/m) + Cable Factor(dB) – Pre-Amplifier Factor(dB)
3. Margin value = Emission Level – Limit value
4. The emission levels were very low against the limit of frequency range 9kHz~30MHz: the amplitude of spurious emissions attenuated more than 20 dB below the permissible value to be report.

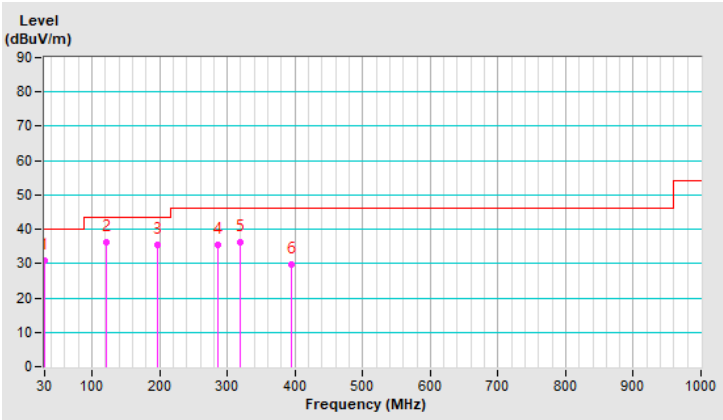

FREQUENCY RANGE	9kHz ~ 1GHz	DETECTOR FUNCTION	Quasi-Peak (QP)

ANTENNA POLARITY & TEST DISTANCE: VERTICAL AT 3 M								
NO.	FREQ. (MHz)	EMISSION LEVEL (dBuV/m)	LIMIT (dBuV/m)	MARGIN (dB)	ANTENNA HEIGHT (m)	TABLE ANGLE (Degree)	RAW VALUE (dBuV)	CORRECTION FACTOR (dB/m)
1	44.16	32.1 QP	40.0	-7.9	1.00 V	360	44.9	-12.8
2	111.55	27.5 QP	43.5	-16.0	1.00 V	238	43.2	-15.7
3	163.57	32.7 QP	43.5	-10.8	1.00 V	157	45.6	-12.9
4	282.39	36.2 QP	46.0	-9.8	2.00 V	193	48.8	-12.6
5	350.12	29.5 QP	46.0	-16.5	1.00 V	161	40.4	-10.9
6	800.01	32.4 QP	46.0	-13.6	1.00 V	197	34.8	-2.4

REMARKS:

1. Emission Level(dBuV/m) = Raw Value(dBuV) + Correction Factor(dB/m)
2. Correction Factor(dB/m) = Antenna Factor(dB/m) + Cable Factor(dB) – Pre-Amplifier Factor(dB)
3. Margin value = Emission Level – Limit value
4. The emission levels were very low against the limit of frequency range 9kHz~30MHz: the amplitude of spurious emissions attenuated more than 20 dB below the permissible value to be report.

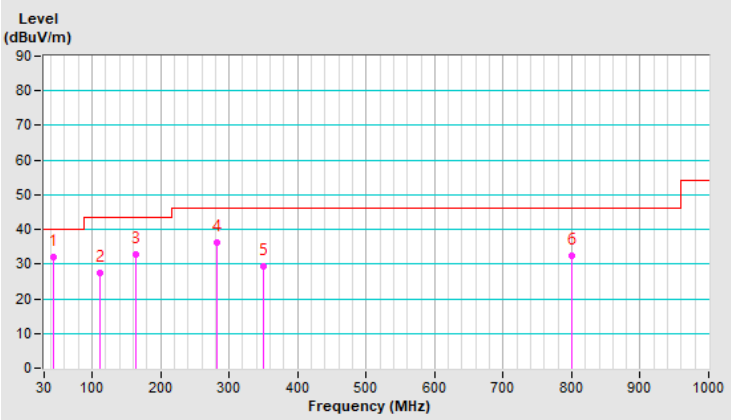

4.2 Modulation characteristics Measurement

In addition to the reporting requirements of FCC 2.1047, the following information shall be provided, as per the applicable modulation type:

Mode 1:

- Modulation type: FMCW
- Modulation profile: Saw tooth
- Start frequency: 76.050 MHz
- Sweep BW (maximum): 766.5 MHz
- Sweep rate (typical): 49.97 MHz/uS
- Sweep time (typical): 15.34 uS

Mode 2:

- Modulation type: FMCW
- Modulation profile: Saw tooth
- Start frequency: 77.025 MHz
- Sweep BW (maximum): 3949.4 MHz
- Sweep rate (typical): 50.79 MHz/uS
- Sweep time (typical): 77.76 uS

4.3 Occupied Bandwidth Measurement

4.3.1 Test Setup

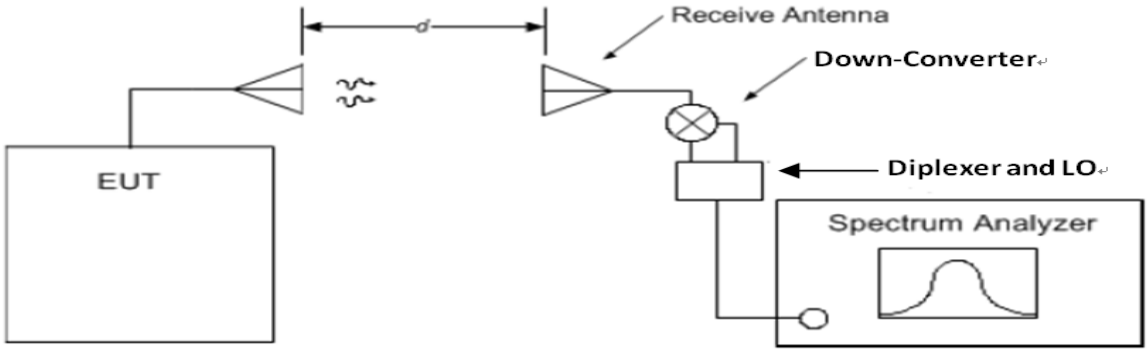

4.3.2 Test Instruments

Refer to section 4.1.2 to get information of above instrument.

4.3.3 Test Procedure

The transmitter output was connected to the spectrum analyzer through an attenuator. The bandwidth of the fundamental frequency was measured by spectrum analyzer with resolution bandwidth in the range of 1% to 5% of the anticipated emission bandwidth, and a video bandwidth at least 3x the resolution bandwidth and set the detector to sampling. The width of a frequency band such that, below the lower and above the upper frequency limits, the mean powers emitted are each equal to a specified percentage 0.5% of the total mean power of a given emission.

4.3.4 Deviation from Test Standard

No deviation.

4.3.5 EUT Operating Conditions

Set the EUT under transmission condition continuously at specific channel frequency.

4.3.6 Test Results (Mode 1)

Frequency Range (GHz)	Occupied Bandwidth (MHz)
76.050~76.820	761.66

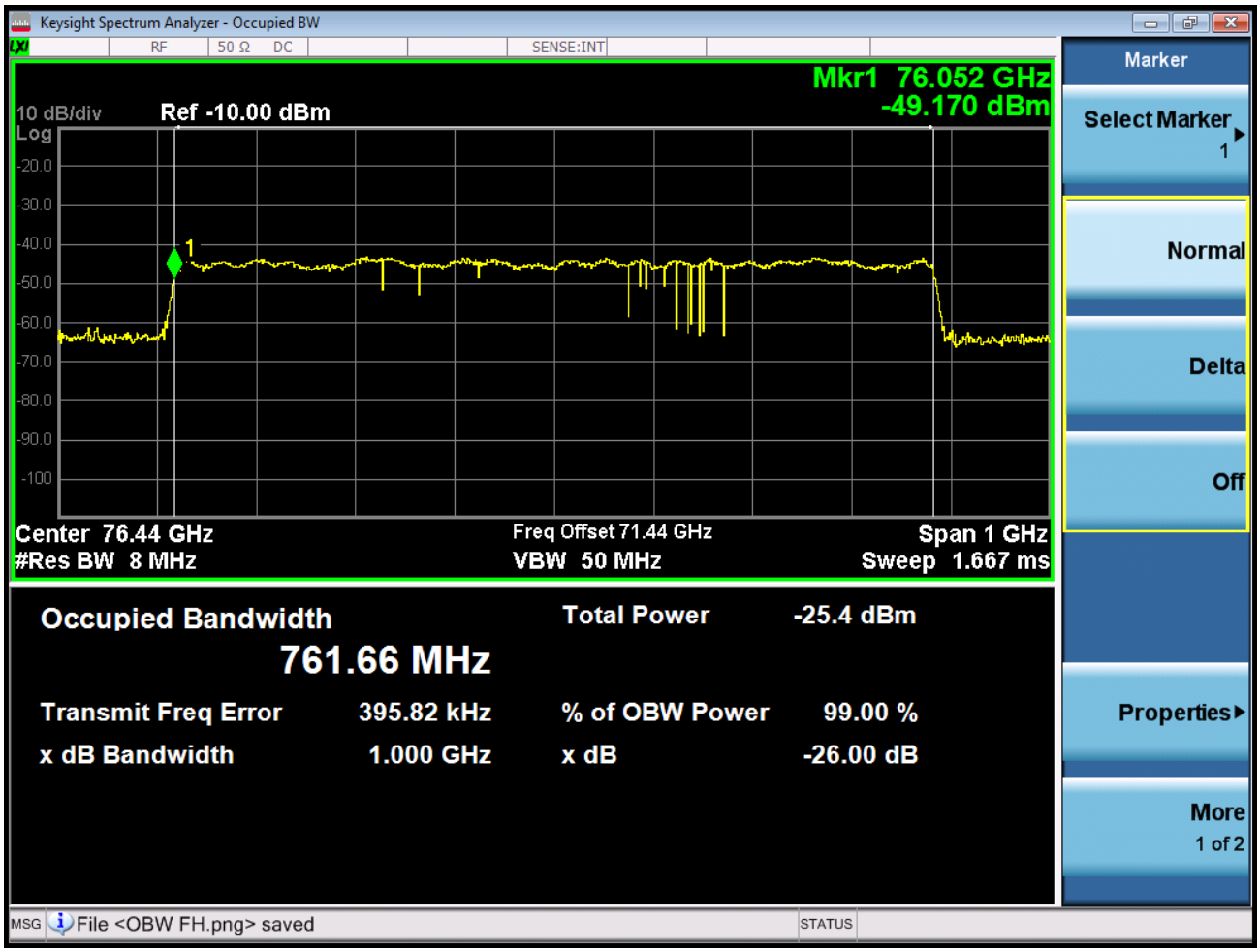

4.3.7 Test Results (Mode 2)

Frequency Range (GHz)	Occupied Bandwidth (MHz)
77~81	3935.4

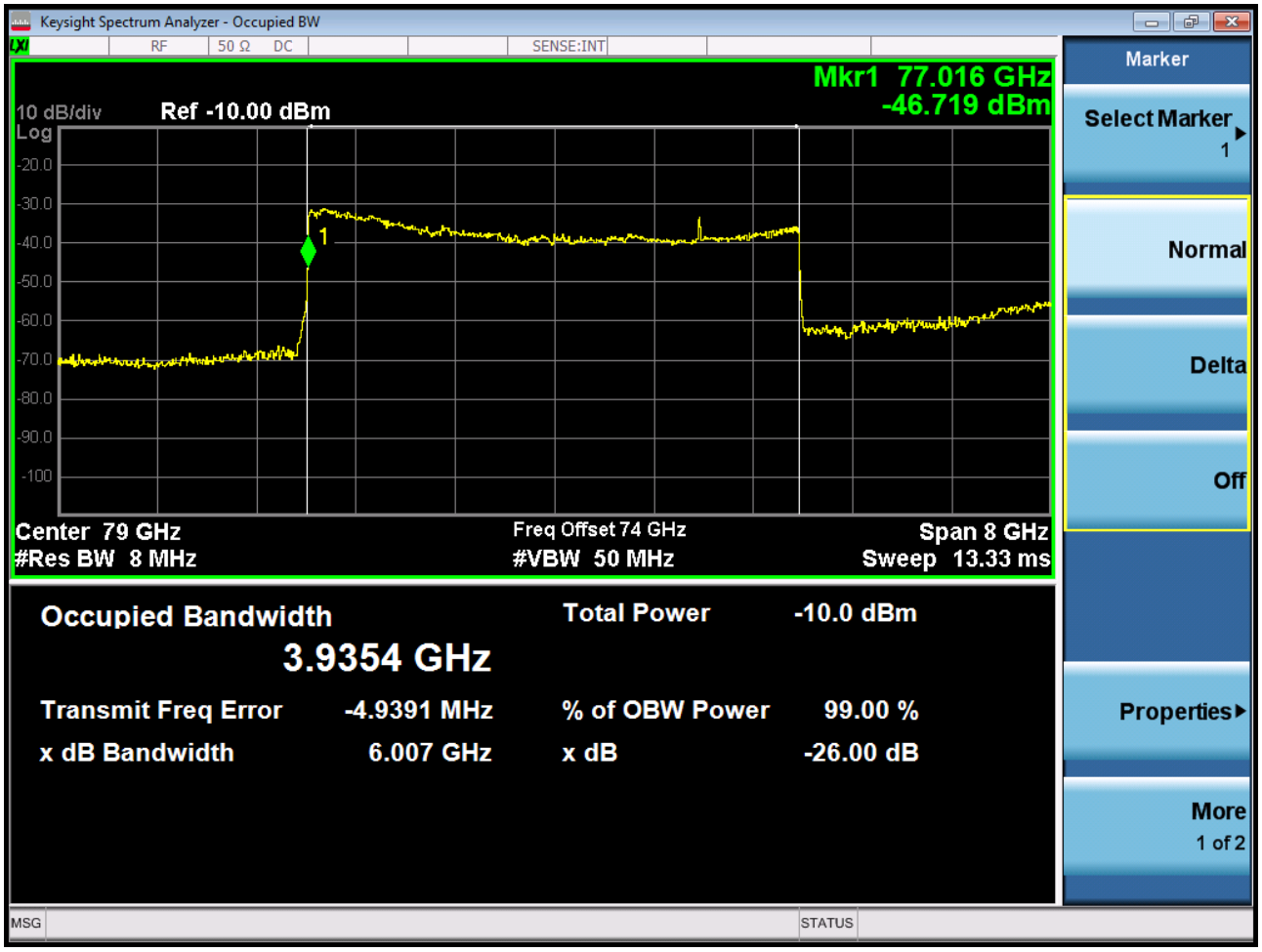

4.4 Frequency Stability Measurement

4.4.1 Limits of Conducted Emission Measurement

Fundamental emissions must be contained within the frequency bands specified in this section during all conditions of operation.

4.4.2 Test Instruments

DESCRIPTION & MANUFACTURER	MODEL NO.	SERIAL NO.	CALIBRATED DATE	CALIBRATED UNTIL
N9029AV10-DC9 - 75-110 GHz VDI Standard Downconverter with 9VDC supply Keysight	SA Extension WR10	SAX 378	CoC	CoC
*Horn Antenna (75~110GHz) OML	M10RH	110215-1	Oct. 17, 2017	Oct. 16, 2020
Spectrum Analyzer Keysight	N9030A	MY54490679	July 17, 2019	July 16, 2020
DC Power Supply Topward	6603D	795558	NA	NA
Temperature & Humidity Chamber Giant Force	GTH-150-40-SP-AR	MAA0812-008	Jan. 16, 2020	Jan. 15, 2021
True RMS Clamp Meter FLUKE	325	31130711WS	May 21, 2019	May 20, 2020

NOTE:

1. The calibration interval of the above test instruments is 12 months and the calibrations are traceable to NML/ROC and NIST/USA.
2. *The calibration interval of the above test instruments is 36 months and the calibrations are traceable to NML/ROC and NIST/USA.
3. Certificate of Conformance (CoC) which is issued by manufacturer states that the product meets the specification.
4. The test was performed in Oven room 2.
5. Tested Date: May 12, 2020

4.4.3 Test Procedure

a. The EUT was placed inside the environmental test chamber and powered by nominal DC voltage.

b. Turn the EUT on and couple its output to a spectrum analyzer.

c. Turn the EUT off and set the chamber to the highest temperature specified.

d. Allow sufficient time (approximately 30 min) for the temperature of the chamber to stabilize, turn the EUT on and measure the operating frequency after 2, 5, and 10 minutes.

e. Repeat step (d) with the temperature chamber set to the next desired temperature until measurements down to the lowest specified temperature have been completed.

f. The test chamber was allowed to stabilize at +20 degree C for a minimum of 30 minutes. The supply voltage was then adjusted on the EUT from 85% to 115% and the frequency record.

4.4.4 Test Setup

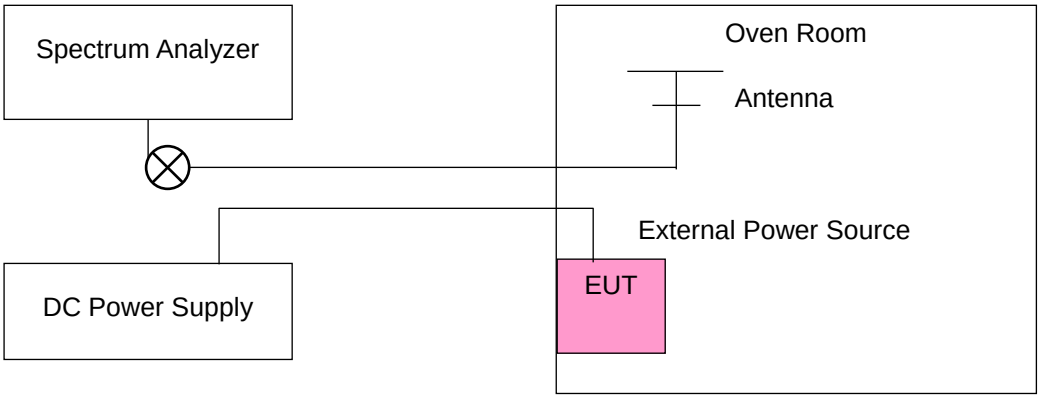

4.4.5 Test Results (Mode 1)

Frequency Stability Versus Temp.													
Operating Frequency: 76453 MHz													
TEMP. (℃)	Power Supply (Vdc)	0 Minute			2 Minutes			5 Minutes			10 Minutes		
		FL(MHz)	FH(MHz)	Pass/ Fail	FL(MHz)	FH(MHz)	Pass/ Fail	FL(MHz)	FH(MHz)	Pass/ Fail	FL(MHz)	FH(MHz)	Pass/ Fail
50	12	76051.82	76813.86	Pass	76051.78	76813.88	Pass	76051.79	76813.91	Pass	76051.83	76813.89	Pass
40	12	76052.16	76813.89	Pass	76052.17	76813.86	Pass	76052.16	76813.86	Pass	76052.18	76813.83	Pass
30	12	76051.65	76813.96	Pass	76051.61	76813.97	Pass	76051.63	76813.96	Pass	76051.66	76813.95	Pass
20	12	76051.74	76813.41	Pass	76051.73	76813.43	Pass	76051.70	76813.38	Pass	76051.77	76813.39	Pass
10	12	76051.76	76813.68	Pass	76051.78	76813.74	Pass	76051.72	76813.74	Pass	76051.78	76813.68	Pass
0	12	76051.92	76813.36	Pass	76051.92	76813.40	Pass	76051.91	76813.36	Pass	76051.92	76813.43	Pass
-10	12	76052.17	76813.69	Pass	76052.21	76813.71	Pass	76052.15	76813.67	Pass	76052.15	76813.67	Pass
-20	12	76051.79	76813.32	Pass	76051.78	76813.34	Pass	76051.77	76813.36	Pass	76051.78	76813.34	Pass

Frequency Stability Versus Voltage													
Operating Frequency: 76453 MHz													
TEMP. (℃)	Power Supply (Vdc)	0 Minute			2 Minutes			5 Minutes			10 Minutes		
		FL(MHz)	FH(MHz)	Pass/ Fail	FL(MHz)	FH(MHz)	Pass/ Fail	FL(MHz)	FH(MHz)	Pass/ Fail	FL(MHz)	FH(MHz)	Pass/ Fail
20	13.8	76051.73	76813.42	Pass	76051.74	76813.44	Pass	76051.70	76813.39	Pass	76051.76	76813.39	Pass
	12	76051.74	76813.41	Pass	76051.73	76813.43	Pass	76051.70	76813.38	Pass	76051.77	76813.39	Pass
	10.2	76051.73	76813.43	Pass	76051.73	76813.43	Pass	76051.71	76813.37	Pass	76051.76	76813.37	Pass

4.4.6 Test Results (Mode 2)

Frequency Stability Versus Temp.													
Operating Frequency: 79000 MHz													
TEMP. (℃)	Power Supply (Vdc)	0 Minute			2 Minutes			5 Minutes			10 Minutes		
		FL(MHz)	FH(MHz)	Pass/ Fail	FL(MHz)	FH(MHz)	Pass/ Fail	FL(MHz)	FH(MHz)	Pass/ Fail	FL(MHz)	FH(MHz)	Pass/ Fail
50	12	77015.81	80951.45	Pass	77015.81	80951.45	Pass	77015.82	80951.48	Pass	77015.77	80951.45	Pass
40	12	77016.35	80951.16	Pass	77016.35	80951.16	Pass	77016.33	80951.14	Pass	77016.33	80951.15	Pass
30	12	77016.37	80951.39	Pass	77016.40	80951.41	Pass	77016.37	80951.33	Pass	77016.35	80951.35	Pass
20	12	77015.94	80951.57	Pass	77015.96	80951.54	Pass	77015.98	80951.59	Pass	77015.96	80951.57	Pass
10	12	77016.17	80951.31	Pass	77016.14	80951.34	Pass	77016.14	80951.35	Pass	77016.17	80951.34	Pass
0	12	77015.89	80951.24	Pass	77015.84	80951.22	Pass	77015.85	80951.23	Pass	77015.90	80951.23	Pass
-10	12	77016.33	80951.52	Pass	77016.33	80951.50	Pass	77016.35	80951.48	Pass	77016.29	80951.47	Pass
-20	12	77016.25	80951.49	Pass	77016.25	80951.54	Pass	77016.21	80951.56	Pass	77016.24	80951.50	Pass

Frequency Stability Versus Voltage													
Operating Frequency: 79000 MHz													
TEMP. (℃)	Power Supply (Vdc)	0 Minute			2 Minutes			5 Minutes			10 Minutes		
		FL(MHz)	FH(MHz)	Pass/ Fail	FL(MHz)	FH(MHz)	Pass/ Fail	FL(MHz)	FH(MHz)	Pass/ Fail	FL(MHz)	FH(MHz)	Pass/ Fail
20	13.8	77015.95	80951.57	Pass	77015.95	80951.54	Pass	77015.97	80951.60	Pass	77015.95	80951.58	Pass
	12	77015.94	80951.57	Pass	77015.96	80951.54	Pass	77015.98	80951.59	Pass	77015.96	80951.57	Pass
	10.2	77015.95	80951.57	Pass	77015.98	80951.54	Pass	77015.97	80951.59	Pass	77015.94	80951.56	Pass

5 Pictures of Test Arrangements

Please refer to the attached file (Test Setup Photo).

Appendix – Information of the Testing Laboratories

We, Bureau Veritas Consumer Products Services (H.K.) Ltd., Taoyuan Branch, were founded in 1988 to provide our best service in EMC, Radio, Telecom and Safety consultation. Our laboratories are FCC recognized accredited test firms and accredited according to ISO/IEC 17025.

If you have any comments, please feel free to contact us at the following:

Lin Kou EMC/RF Lab
Tel: 886-2-26052180
Fax: 886-2-26051924

Hsin Chu EMC/RF/Telecom Lab
Tel: 886-3-6668565
Fax: 886-3-6668323

Hwa Ya EMC/RF/Safety Lab
Tel: 886-3-3183232
Fax: 886-3-3270892

Email: service.adt@tw.bureauveritas.com
Web Site: www.bureauveritas-adt.com

The address and road map of all our labs can be found in our web site also.

--- END ---