flextone®
GAME CALLS

HD E-GAME CALL

VENGEANCE

User's Manual

Model # FLX100

INCLUDED PARTS

1) Vengeance electronic game call – (1)
2) Product Information Guide – (1)

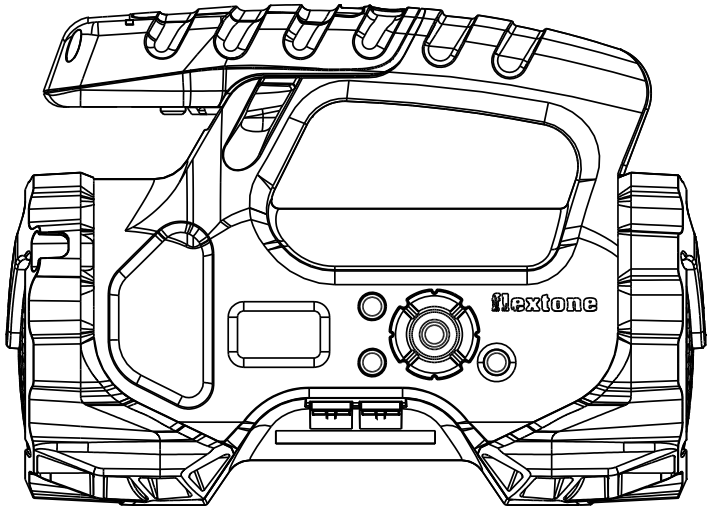

flextone GAME CALLS HDE-GAME CALL

VENGEANCE

User's Manual Model # FLX100

INSTALLING BATTERIES

1 Turn the call on it's side and place thumb on the cover while pressing down and sliding open.

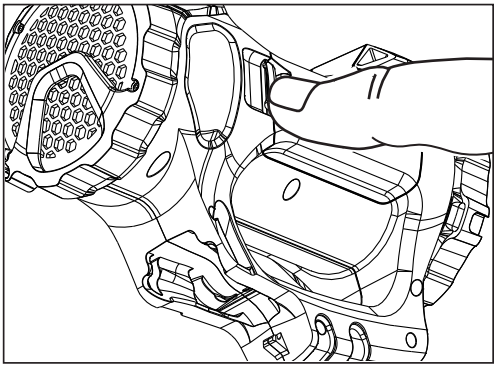

2 Next, pull out the battery chamber, confirm that the positive (+) and negative (–) terminals are oriented correctly as described on the label at the entrance and insert the AA batteries.

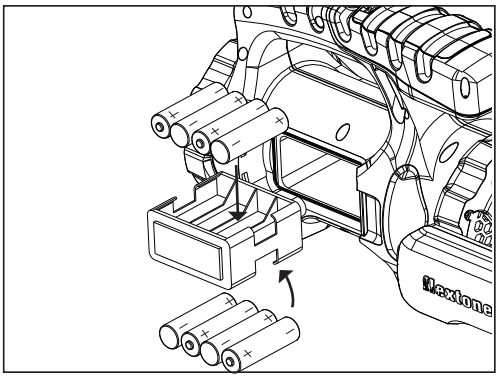

3 To close put battery chamber back inside cavity, put the cover over and press in. Press the door snap after battery door installment to ensure door snap engagement.

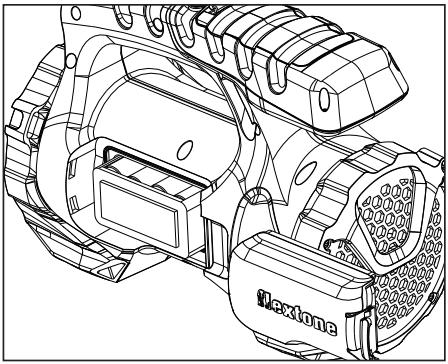

INSTALLING BATTERIES IN REMOTE

1 To install the AAA batteries for the remote, push down on the button and slide open the cover.

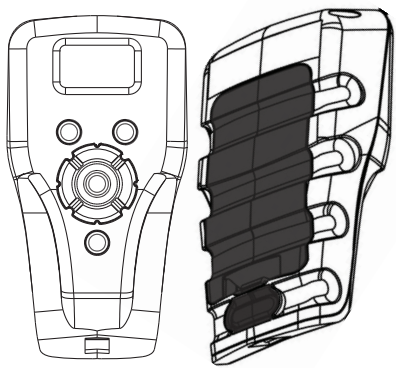

2 Next, confirm that the positive (+) and negative (–) terminals are oriented correctly as described on the label at the entrance and insert the batteries.

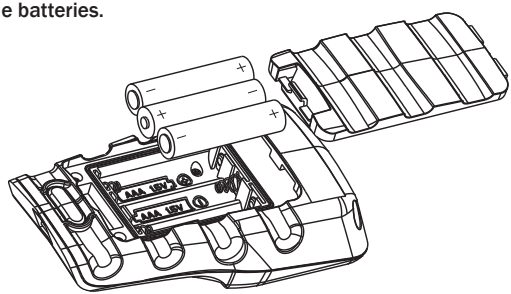

3 To close, place the cover over and press down. Press the door snap after battery door installment to ensure door snap engagement.

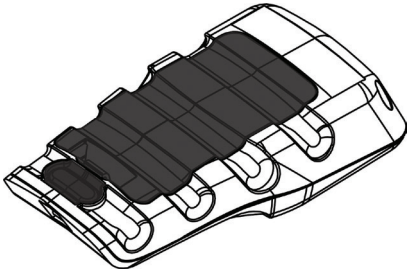

TURNING UNIT ON

Press and hold the power button until LCD is illuminated and then release. Unit is now on. **Note: THE LCD will enter sleep mode in approximately 40 seconds of inactivity**

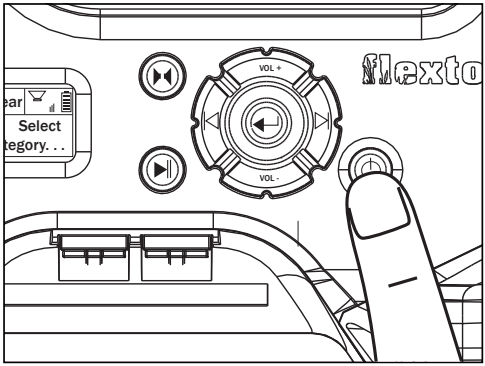

CHOOSING CALL CATEGORY

1 First, select desired call category by pressing and releasing the middle button. Category name should now be blinking.

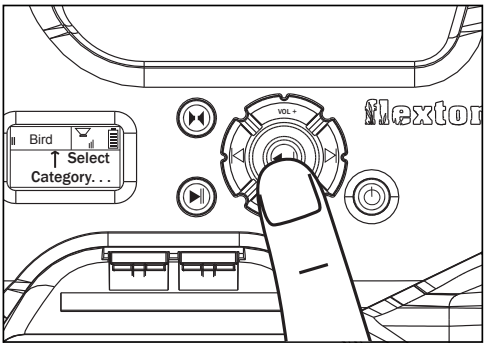

2 Next, press either the left or right button to view the categories.

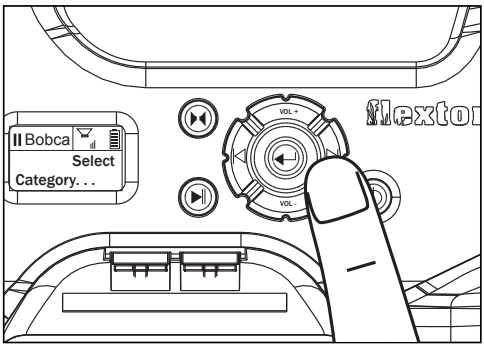

3 When desired category is identified, press and release middle button.

CHOOSING INDIVIDUAL CALLS

After the category has been chosen, scroll left or right to view individual calls within the category.

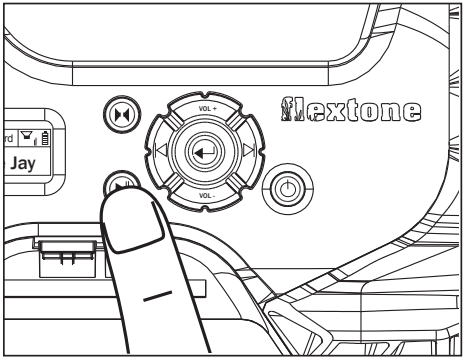

TO USE CALL

Once the desired call is identified, press the play button to activate the speaker. This will activate the audible call. To maximize the effectiveness of the Vengeance, point the call in the direction you want the call to go to. Note: Call will loop repeatedly until call is deactivated. DO NOT PRESS ENTER BUTTON TO ACTIVATE CALL.

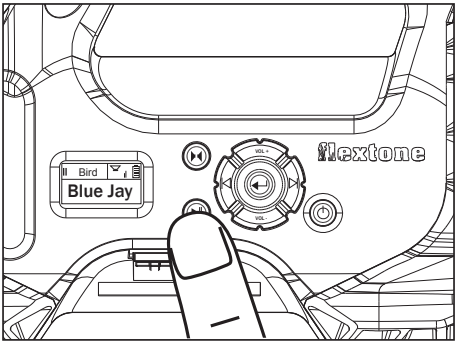

VOLUME CONTROL

To adjust volume, press the volume up or down buttons.

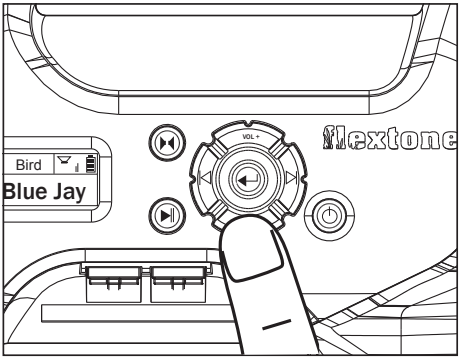

To adjust sound from left speaker to right speaker, press top left button.

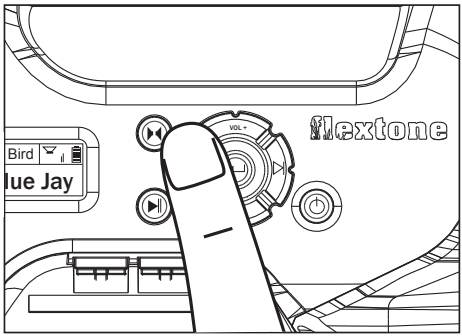

TURN UNIT OFF

Press and hold the power button until LCD is illuminated and then release. Unit is now off. Note: THE LCD will enter sleep mode in approximately 40 seconds of inactivity. The unit will off if no any sound output for 15 minutes.

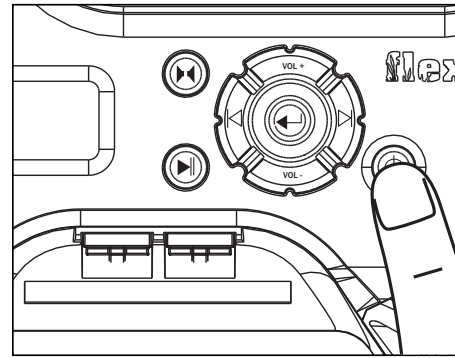

TURNING REMOTE ON

Press and hold the power button until LCD is illuminated and then release. Unit is now on.

Note: THE LCD will enter sleep mode in approximately 40 seconds of inactivity.

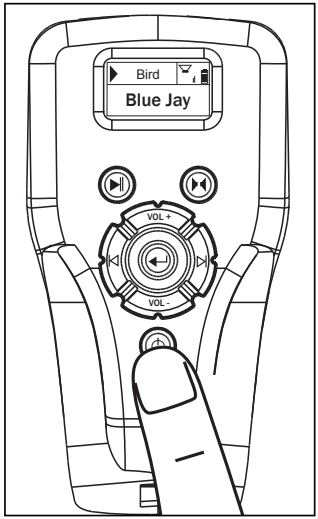

CHOOSING CALL CATEGORY

1 First, select desired call category by pressing and releasing the middle button. Category name should now be blinking.

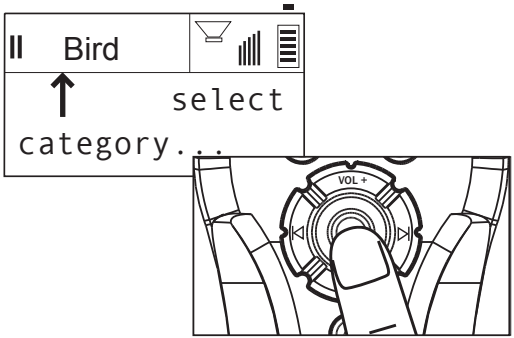

2 Next, press either the left or right button to view the categories. When desired category is identified, press and release middle button.

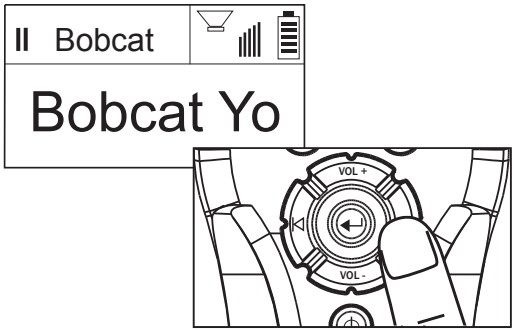

CHOOSING INDIVIDUAL CALLS

After the category has been chosen, scroll left or right to view individual calls within the category.

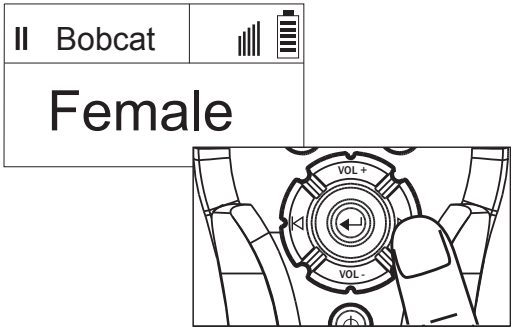

TO USE CALL

Once the desired call is identified, press the play button to activate the speaker. This will activate the audible call. Note: Call will loop repeatedly until call is deactivated. DO NOT PRESS ENTER BUTTON TO ACTIVATE CALL.

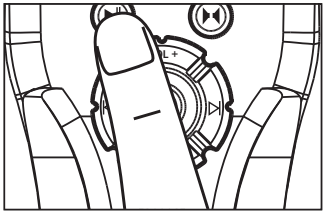

VOLUME CONTROL

To adjust volume, press the volume up or down buttons.

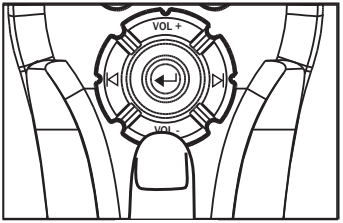

To adjust sound from left speaker to right speaker, press top right button.

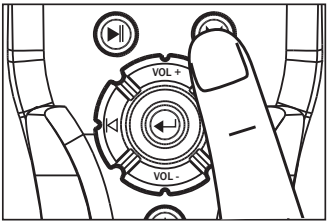

AUDIO IN/AUDIO OUT

Plug in external audio device with 3.5 mm cable to either the Audio Input or the Audio Out depending on the device and required results. Both Audio In/Audio Out Functions can be controlled from the main unit and the remote.

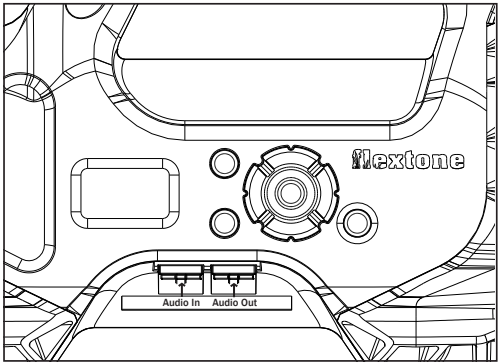

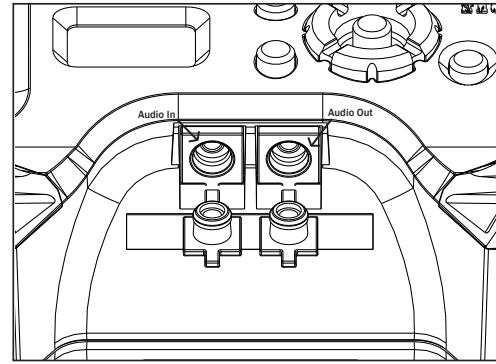

REMOTE DETACHMENT

To detach the remote place thumb on the button while pressing down and sliding out.

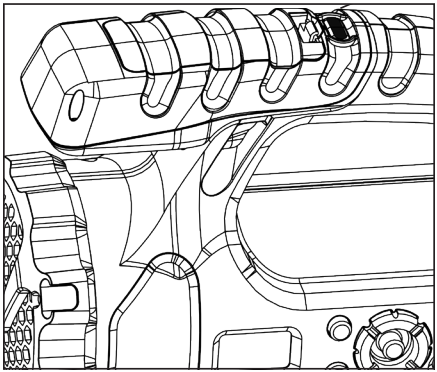

To attach the remote hold with buttons facing down and slide in until it clicks.

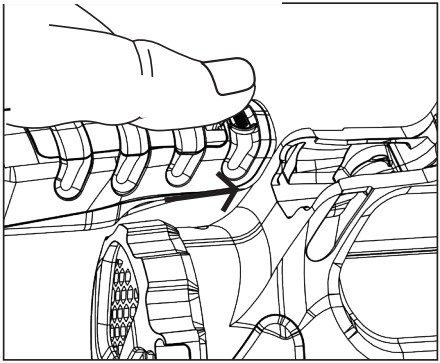

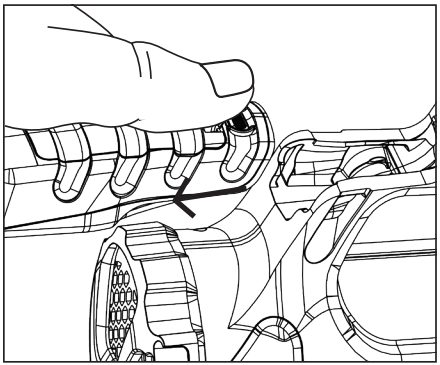

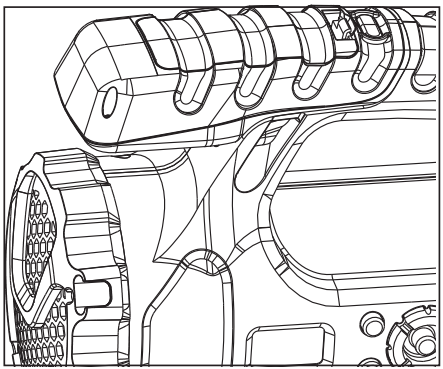

WARRANTY

DISCLAIMERS
WGI Innovations, LTD. is not responsible for damage, expense or injury caused by the unauthorized use of, alterations to, improper connection of and abuse or neglect of the WGI Innovations™ products.

WARRANTY
You must register your product warranty online at www.wildgameinnovations.com. Follow the on screen directions to complete the process. WGI Innovations, LTD. will replace any product that may encounter material or workmanship defects free of charge for ONE (1) YEAR after the date of purchase and thereafter the cost will vary per incident.

This warranty DOES NOT COVER damage, expense or injury caused by unauthorized repairs, animal damage, alterations, improper connection, shipping, abuse, theft, accident, neglect or collateral loss.

When returning product for service you MUST obtain a Return Merchandise Authorization (RMA) number from WGI Innovations, LTD. Please include name, UPS address (no P.O. Box), telephone number, RMA number and a complete description of the problem on all enclosed correspondence. When possible, pack product carefully in original carton. Customers are responsible for any shipping cost to WGI Innovations™. WGI Innovations™ will pay shipping cost of replacement product to the customer. We are not responsible for damage incurred in returning items for repair.

CUSTOMER SERVICE
WGI Innovations, LTD. stands behind every product we manufacture for a one year product workmanship warranty and a strong commitment to customer service. If you are in need of customer service for missing parts or need assistance with the operation or assembly of your product, we encourage you to call one of our customer service representatives and let us assist you with your WGI Innovations™ product.

DISCLAIMER
WGI Innovations, LTD. reserves the right to make changes to product features, functionality and physical design at its sole discretion. As a result, such changes may not be reflected in this version of the manual.

FCC STATEMENT

Product Name: Electronic Game Call
Trade Name: Flextone
Model# FLX100

This device complies with Part 15 of the FCC Rules. Operation is subject to the following two criteria: (1) This device may not cause harmful interference, and (2) This device must accept any interference received, including interference that may cause undesired operation.

Warning: Changes or modifications to this unit not expressly approved by the party responsible for compliance could void the user's authority to operate the equipment.

NOTE: This equipment has been tested and found to comply with the limits for a Class B digital device, pursuant to Part 15 of the FCC Rules. These limits are designed to provide reasonable protection against harmful interference in a residential installation. This equipment generates, uses and can radiate radio frequency energy and, if not installed and used in accordance with the instructions, may cause harmful interference to radio communications.

However, there is no guarantee that interference will not occur in a particular installation. If this equipment does cause harmful interference to radio or television reception, which can be determined by turning the equipment off and on, the user is encouraged to try to correct the interference by one or more of the following measures:
-Reorient or relocate the receiving antenna.
-Increase the separation between the equipment and receiver.
-Connect the equipment into an outlet on a circuit different from that to which the receiver is connected.
-Consult the dealer or an experienced radio/TV technician for help.

INDUSTRY CANADA CERTIFICATION

This device complies with Industry Canada license-exempt RSS standard(s). Operation is subject to the following two conditions: (1) this device may not cause interference, and (2) this device must accept any interference,including interference that may cause undesired operation of the device.

This Class [B] digital apparatus complies with Canadian ICES-003.

WGI INNOVATIONS, LTD
602 Fountain Parkway
Grand Prairie, TX 75050
800.847.8269

"Flextone" is a registered trademark of Wildgame Innovations, LLC.
"VENGEANCE" & "Sport Responsible" are TM trademarks of WGI Innovations, LTD.